(V) Preliminary Specifications
( ) Final Specifications

Module	**11.6”(11.57”) HD 16:9 Color TFT-LCD with LED Backlight design**
Model Name	B116XTN02.3 (H/W:3A)
Note ( )	***LED Backlight with driving circuit design***

Customer	**Date**	**Approved by**	**Date**
		Kay Liu	10/28/2014
Checked & Approved by	**Date**	**Prepared by**	**Date**
		Huiwenhuang	10/28/2014
Note: This Specification is subject to change without notice.		**NBBU Marketing Division AU Optronics corporation**	

Contents

1. Handling Precautions 4
2. General Description 5
2.1 General Specification 5
2.2 Optical Characteristics 6
3. Functional Block Diagram 11
4. Absolute Maximum Ratings 13
4.1 Absolute Ratings of TFT LCD Module 13
4.2 Absolute Ratings of Environment 13
5. Electrical Characteristics 14
5.1 TFT LCD Module 14
5.2 Backlight Unit 17
6. Signal Interface Characteristic 18
6.1 Pixel Format Image 18
6.2 Integration Interface Requirement 19
6.3 Interface Timing 20
6.4 Power ON/OFF Sequence 21
7. Panel Reliability Test 24
7.1 Vibration Test 24
7.2 Shock Test 24
7.3 Reliability Test 24
8. Mechanical Characteristics 25
8.1 LCM Outline Dimension 25
9. Shipping and Package 27
9.1 Shipping Label Format 27
9.2 Carton Package 28
9.3 Shipping Package of Palletizing Sequence 29
10. Appendix: EDID Description 30

Record of Revision

Version and Date	Page	Old description	New Description	Remark
0.1 2014/6/30	All	First Edition for Customer		

1. Handling Precautions

1) Since front polarizer is easily damaged, pay attention not to scratch it.
2) Be sure to turn off power supply when inserting or disconnecting from input connector.
3) Wipe off water drop immediately. Long contact with water may cause discoloration or spots.
4) When the panel surface is soiled, wipe it with absorbent cotton or other soft cloth.
5) Since the panel is made of glass, it may break or crack if dropped or bumped on hard surface.
6) Since CMOS LSI is used in this module, take care of static electricity and insure human earth when handling.
7) Do not open nor modify the Module Assembly.
8) Do not press the reflector sheet at the back of the module to any directions.
9) At the insertion or removal of the Signal Interface Connector, be sure not to rotate nor tilt the Interface Connector of the TFT Module.
11) After installation of the TFT Module into an enclosure (Notebook PC Bezel, for example), do not twist nor bend the TFT Module even momentary. At designing the enclosure, it should be taken into consideration that no bending/twisting forces are applied to the TFT Module from outside. Otherwise the TFT Module may be damaged.
12) Small amount of materials having no flammability grade is used in the LCD module. The LCD module should be supplied by power complied with requirements of Limited Power Source (IEC60950 or UL1950), or be applied exemption.
13) Disconnecting power supply before handling LCD modules, it can prevent electric shock, DO NOT TOUCH the electrode parts, cables, connectors and LED circuit part of TFT module that a LED light bar build in as a light source of back light unit. It can prevent electrostatic breakdown.

2. General Description

B116XTN02.3 is a Color Active Matrix Liquid Crystal Display composed of a TFT LCD panel, a driver circuit, and LED backlight system. The screen format is intended to support the 16:9 HD, 1366(H) x768(V) screen and 262k colors (RGB 6-bits data driver) with LED backlight driving circuit. All input signals are eDP interface compatible.

B116XTN02.3 is designed for a display unit of notebook style personal computer and industrial machine.

2.1 General Specification

The following items are characteristics summary on the table at 25 ℃ condition:

Items	Unit	Specifications			
Screen Diagonal	[mm]	293.8			
Active Area	[mm]	256.13 X 144.0			
Pixels H x V		1366x3(RGB) x 768			
Pixel Pitch	[mm]	0.1875 x 0.1875			
Pixel Format		R.G.B. Vertical Stripe			
Display Mode		Normally White			
White Luminance (I_{LED}=20mA) **(Note: ILED is LED current)**	[cd/m^2]	220 typ. (5 points average)			
Luminance Uniformity		1.6 max. (13 points)			
Contrast Ratio		400 typ (Tentative)			
Response Time	[ms]	8 typ			
Nominal Input Voltage VDD	[Volt]	+3.3 typ.			
Power Consumption	[Watt]	2.65			
Weight	[Grams]	210 max.			
Physical Size **Include bracket**	[mm]		Min.	Typ.	Max.
		Length	267.5	268.0	268.5
		Width (with bracket)	172.48	172.98	173.48
		Thickness	-	-	3.0
Electrical Interface		1 lane eDP			
Glass Thickness	[mm]	0.4			
Surface Treatment		Glare, Hardness 3H,			

Support Color		262K colors (RGB 6-bit)
Temperature Range Operating Storage (Non-Operating)	[°C] [°C]	0 to +50 -20 to +60
RoHS Compliance		RoHS Compliance

2.2 Optical Characteristics

The optical characteristics are measured under stable conditions at 25℃ (Room Temperature) :

Item		Symbol	Conditions	Min.	Typ.	Max.	Unit	Note
White Luminance I_{LED}=20mA			5 points average	185	220	-	cd/m^2	1, 4, 5.
Viewing Angle		θ_R	Horizontal (Right) CR = 10	40	45	-	degree	4, 9
		θ_L	(Left)	40	45	-		
		ϕ_H	Vertical (Upper) CR = 10	10	15	-		
		ϕ_L	(Lower)	30	35	-		
Luminance Uniformity		δ_{5P}	5 Points	-	-	1.25		1, 3, 4
Luminance Uniformity		δ_{13P}	13 Points	-	-	1.6		2, 3, 4
Contrast Ratio		CR		-	400	-		4, 6
Cross talk		%				4		4, 7
Response Time		T_r	Rising	-		-	msec	4, 8
		T_f	Falling	-		-		
		T_{RT}	Rising + Falling	-	8	16		
Color / Chromaticity Coodinates	Red	Rx	CIE 1931		TBD		-	4
		Ry			TBD			
	Green	Gx			TBD			
		Gy			TBD			
	Blue	Bx			TBD			
		By			TBD			
	White	Wx		0.283	0.313	0.343		
		Wy		0.299	0.329	0.359		
NTSC		%		-	45	-		

Note 1: 5 points position (Ref: Active area)

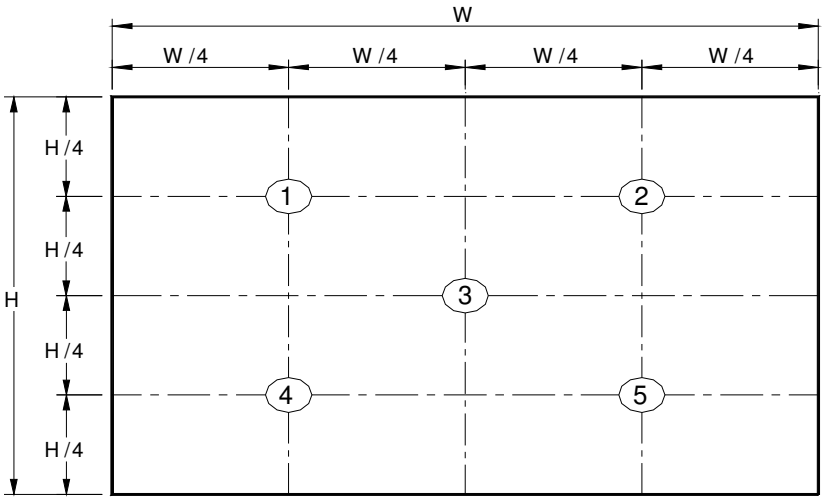

Note 2: 13 points position (Ref: Active area)

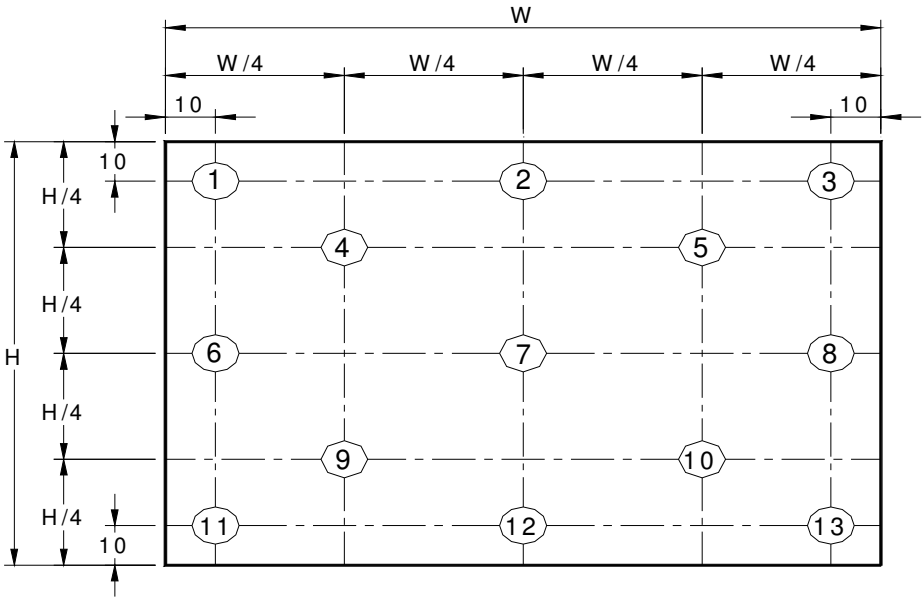

Note 3: The luminance uniformity of 5 or13 points is defined by dividing the maximum luminance values by the minimum test point luminance

$$\delta_{W5} = \frac{\text{Maximum Brightness of five points}}{\text{Minimum Brightness of five points}}$$

$$\delta_{W13} = \frac{\text{Maximum Brightness of thirteen points}}{\text{Minimum Brightness of thirteen points}}$$

Note 4: Measurement method

The LCD module should be stabilized at given temperature for 30 minutes to avoid abrupt temperature change during measuring. In order to stabilize the luminance, the measurement should be executed after lighting Backlight for 30 minutes in a stable, windless and dark room, and it should be measured in the center of screen.

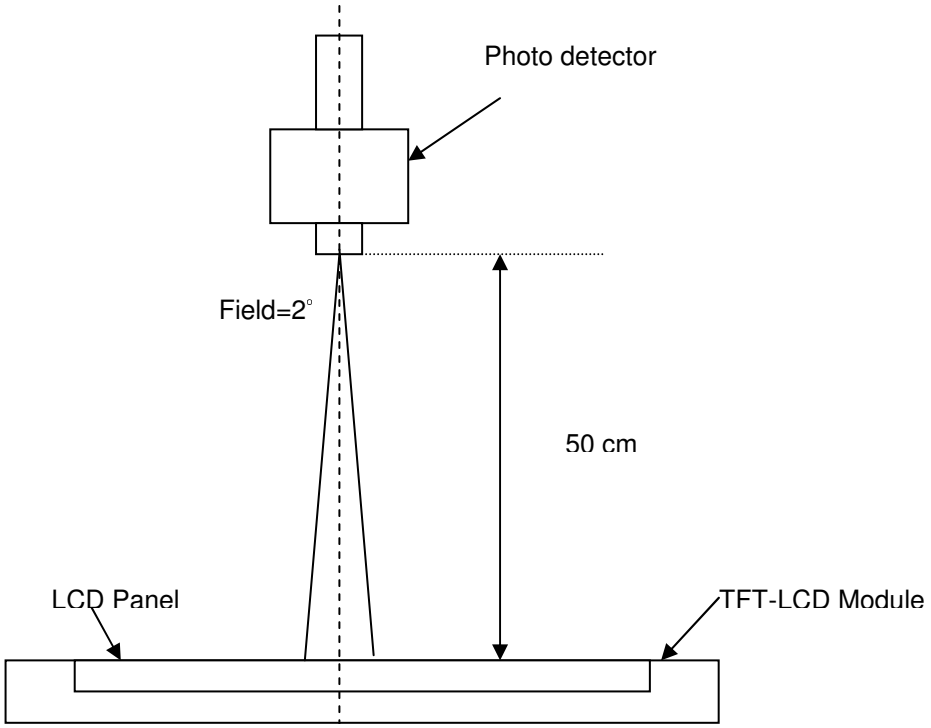

Note 5： Definition of Average Luminance of White (Y_L):

Measure the luminance of gray level 63 at 5 points，Y_L = [L (1)+ L (2)+ L (3)+ L (4)+ L (5)] / 5

L (x) is corresponding to the luminance of the point X at Figure in Note (1).

Note 6： Definition of contrast ratio:

Contrast ratio is calculated with the following formula.

$$\text{Contrast ratio (CR)} = \frac{\text{Brightness on the “White” state}}{\text{Brightness on the “Black” state}}$$

Note 7： Definition of Cross Talk (CT)

$CT = | Y_B – Y_A | / Y_A \times 100$ (%)

Where

Y_A = Luminance of measured location without gray level 0 pattern (cd/m2)

Y_B = Luminance of measured location with gray level 0 pattern (cd/m2)

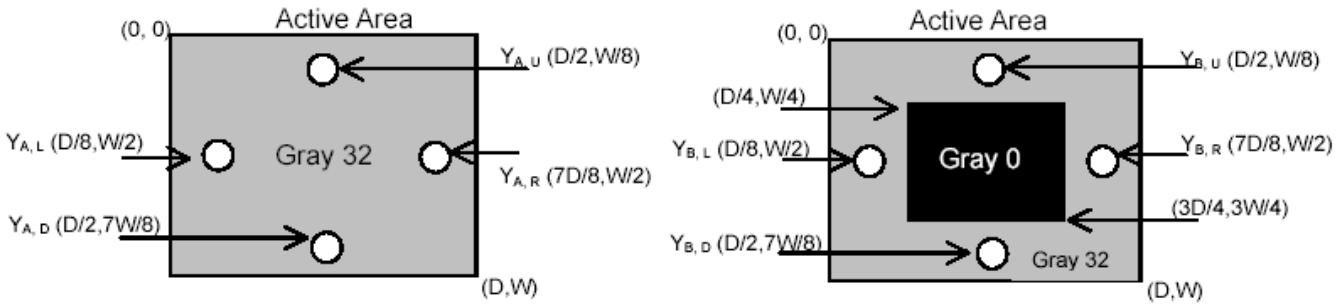

Note 8: Definition of response time:

The output signals of BM-7 or equivalent are measured when the input signals are changed from “Black” to “White” (falling time) and from “White” to “Black” (rising time), respectively. The response time interval between the 10% and 90% of amplitudes. Refer to figure as below.

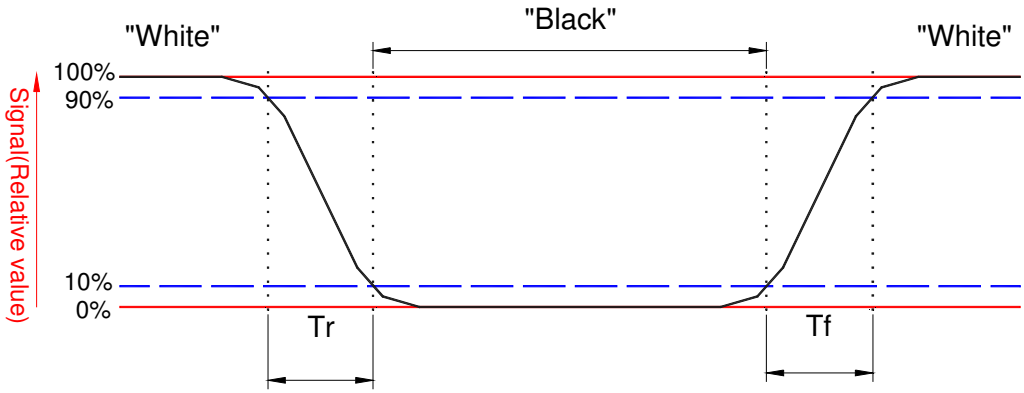

Note 9. Definition of viewing angle

Viewing angle is the measurement of contrast ratio ≧10, at the screen center, over a 180° horizontal and 180° vertical range (off-normal viewing angles). The 180° viewing angle range is broken down as follows; 90° (θ) horizontal left and right and 90° (Φ) vertical, high (up) and low (down). The measurement direction is typically perpendicular to the display surface with the screen rotated about its center to develop the desired measurement viewing angle.

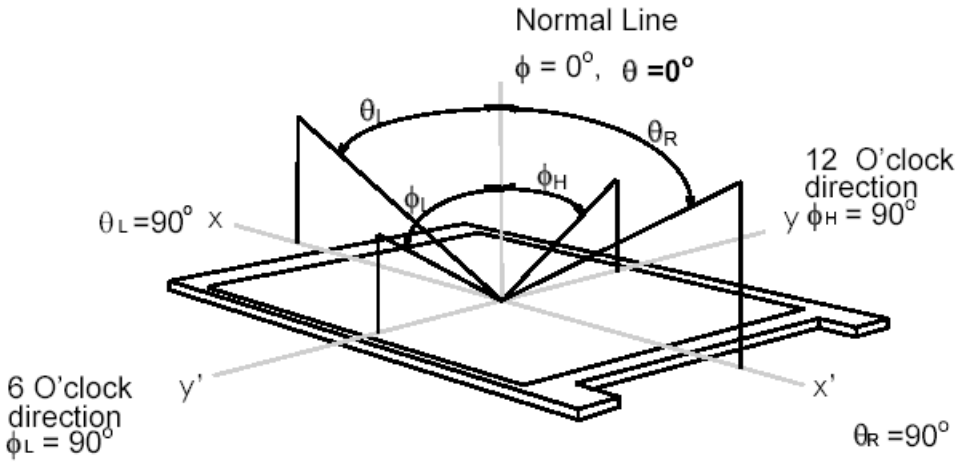

3. Functional Block Diagram

The following diagram shows the functional block of the 11.6 inches wide Color TFT/LCD 40 Pin one channel Module

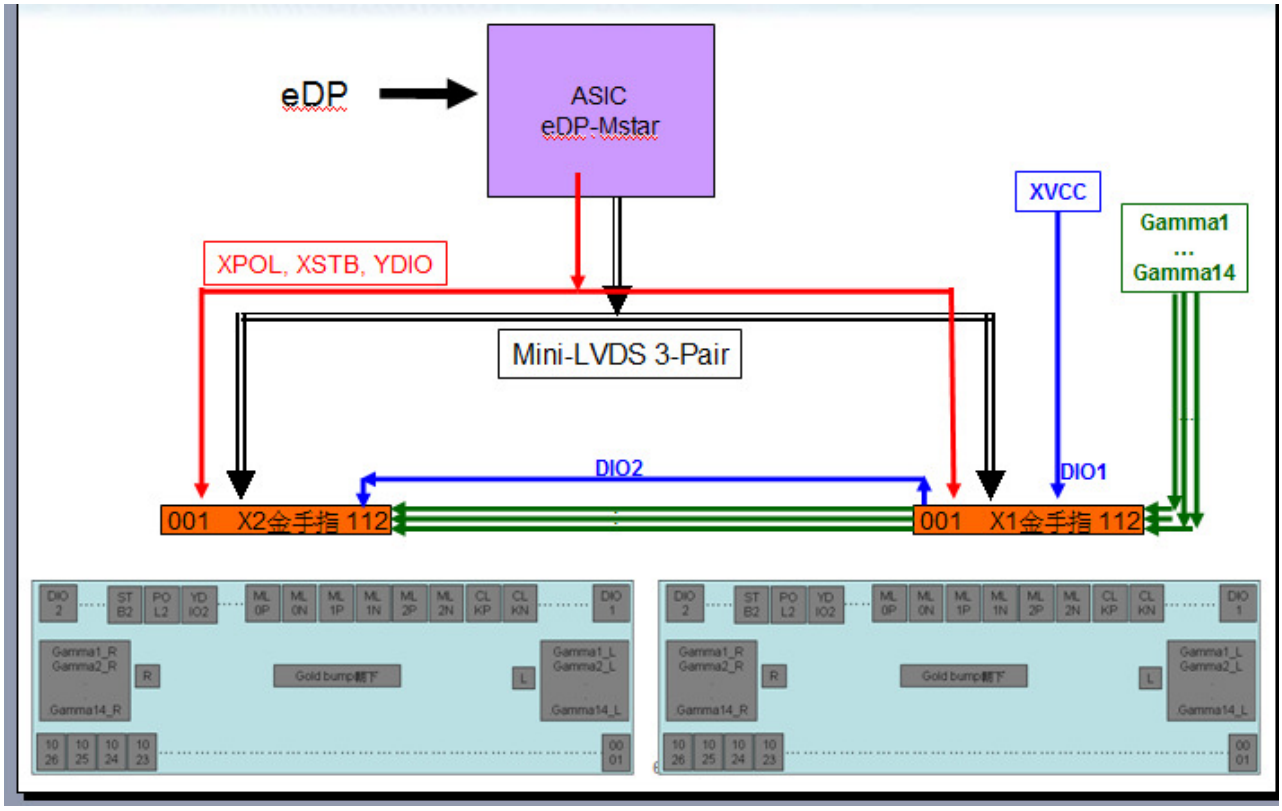

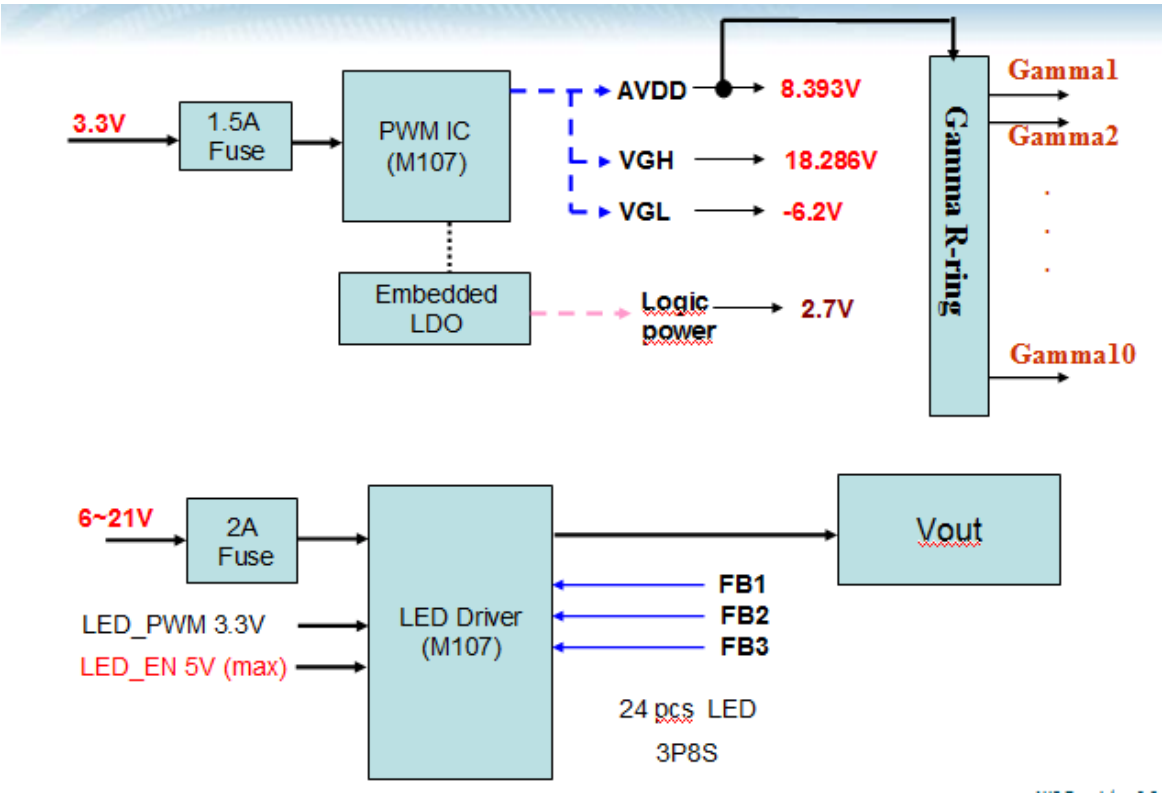
3.3V
1.5A Fuse
PWM IC (M107)
AVDD
8.393V
VGH
18.286V
VGL
-6.2V
Embedded LDO
Logic power
2.7V
Gamma R-ring
Gamma1
Gamma2
Gamma10
6~21V
2A Fuse
LED_PWM 3.3V
LED_EN 5V (max)
LED Driver (M107)
FB1
FB2
FB3
Vout
24 pcs LED
3P8S

4. Absolute Maximum Ratings

An absolute maximum rating of the module is as following:

4.1 Absolute Ratings of TFT LCD Module

Item	Symbol	Min	Max	Unit	Conditions
Logic/LCD Drive Voltage	Vin	-0.3	+4.0	[Volt]	Note 1,2

4.2 Absolute Ratings of Environment

Item	Symbol	Min	Max	Unit	Conditions
Operating Temperature	TOP	0	+50	[°C]	Note 4
Operation Humidity	HOP	5	95	[%RH]	Note 4
Storage Temperature	TST	-20	+60	[°C]	Note 4
Storage Humidity	HST	5	95	[%RH]	Note 4

Note 1: At Ta (25℃)

Note 2: Permanent damage to the device may occur if exceed maximum values

Note 3: LED specification refer to section 5.2

Note 4: For quality performance, please refer to AUO IIS (Incoming Inspection Standard).

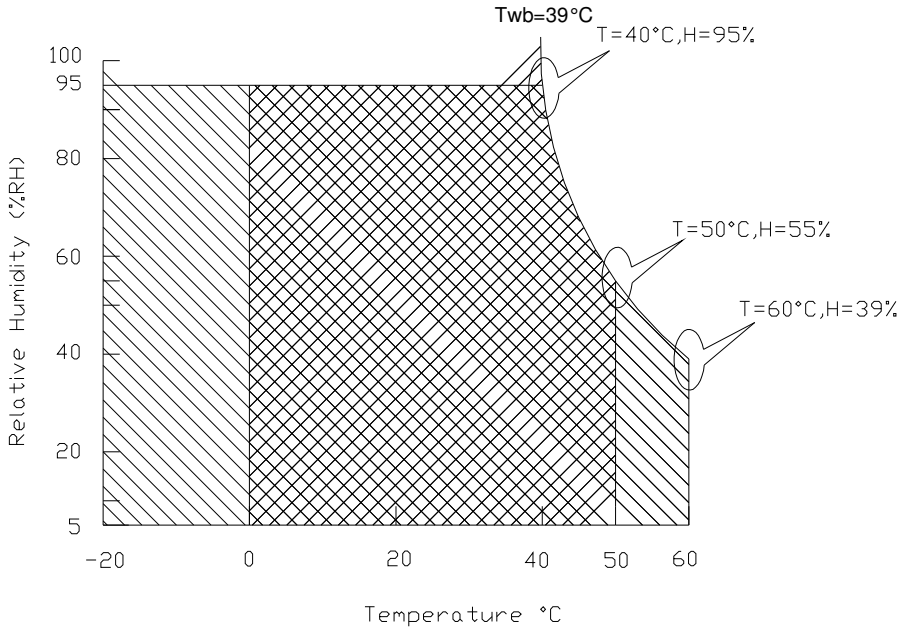

Operating Range Storage Range +

5. Electrical Characteristics

5.1 TFT LCD Module

5.1.1 Power Specification

Input power specifications are as follows;

The power specification are measured under 25℃ and frame frenquency under 60Hz

Symble	Parameter	Min	Typ	Max	Units	Note
VDD	Logic/LCD Drive Voltage	3.0	3.3	3.6	[Volt]	
PDD	VDD Power	-	-	0.7	[Watt]	Note 1
IDD	IDD Current	-	-	242	[mA]	Note 1
IRush	Inrush Current	-	-	2000	[mA]	Note 2
VDDrp	Allowable Logic/LCD Drive Ripple Voltage	-	-	100	[mV] p-p	

Note 1 : Maximum Measurement Condition：Black Pattern at 3.3V driving voltage. ($P_{max}=V_{3.3} \times I_{black}$)

Note 2：Measure Condition

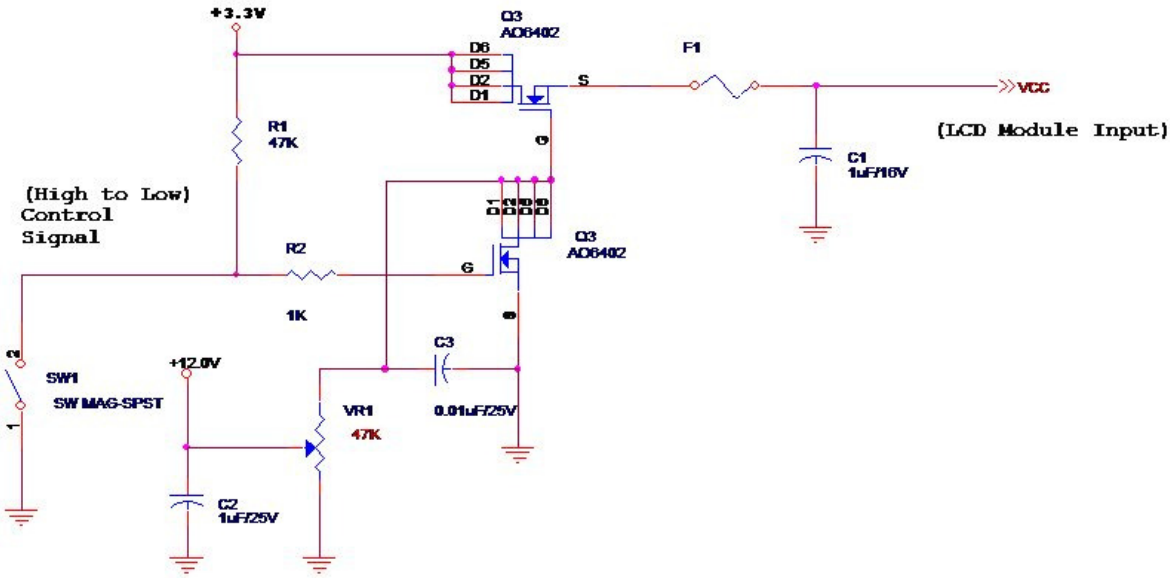

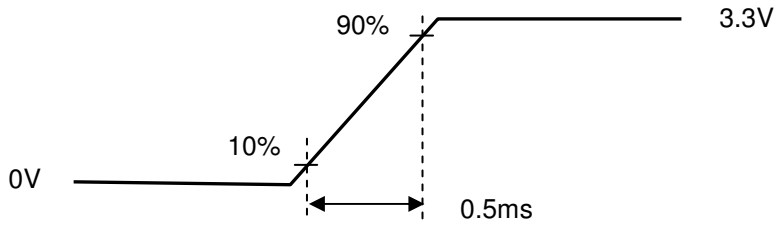

Vin rising time

5.1.2 Signal Electrical Characteristics

Input signals shall be low or High-impedance state when VDD is off.

Signal electrical characteristics are as follows;

Display Port main link signal:

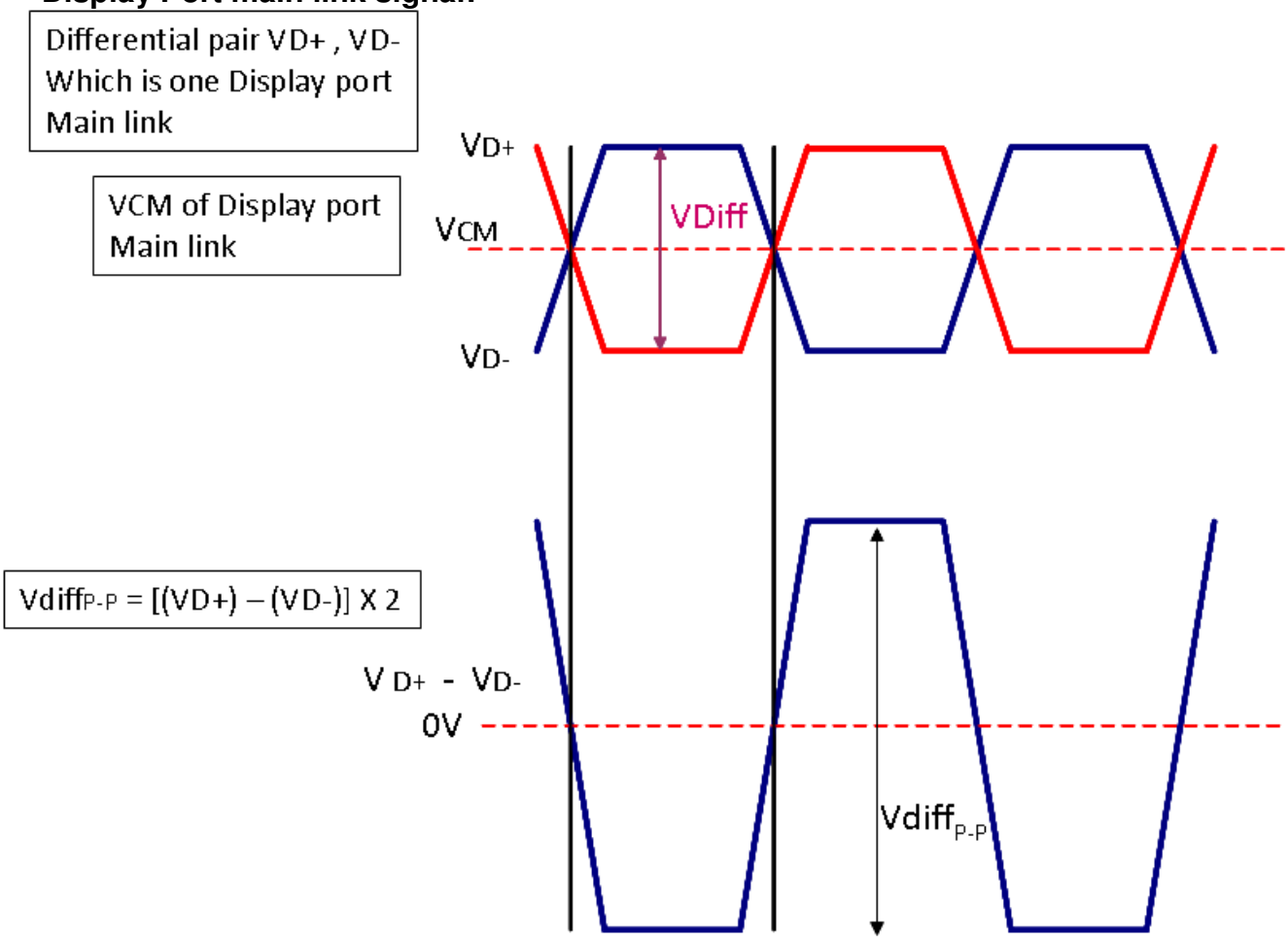

Display port main link					
		Min	Typ	Max	unit
VCM	RX input DC Common Mode Voltage		0		V
$VDiff_{P-P}$	Peak-to-peak Voltage at a receiving Device	120		1320	mV

Follow as VESA display port standard V1.2

Display Port AUX_CH signal:

Differential AUX+ , AUX-
Which is Display pot AUX_CH

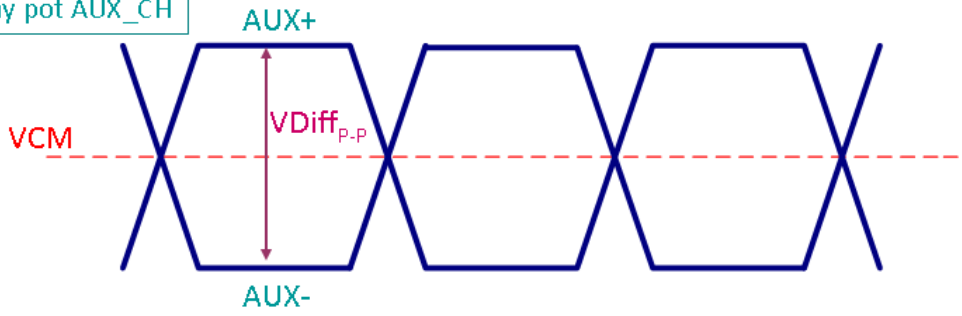

Display port AUX_CH					
		Min	Typ	Max	unit
VCM	AUX DC Common Mode Voltage		0		V
VDiff$_{P-P}$	AUX Peak-to-peak Voltage at a receiving Device	0.4	0.6	0.8	V

Follow as VESA display port standard V1.2

Display Port VHPD signal:

Display port VHPD					
		Min	Typ	Max	unit
VHPD	HPD Voltage	2		3.6	V

Follow as VESA display port standard V1.2

5.2 Backlight Unit

5.2.1 LED characteristics

Parameter	Symbol	Min	Typ	Max	Units	Condition
Backlight Power Consumption	PLED	-	-	1.95	[Watt]	(Ta=25℃), Note 1 Vin =12V
LED Life-Time	N/A	15,000	-	-	Hour	(Ta=25℃), Note 2 I_F=20 mA

Note 1: Calculator value for reference P_{LED} = V_F (Normal Distribution) * I_F (Normal Distribution) / Efficiency

Note 2: The LED life-time define as the estimated time to 50% degradation of initial luminous.

5.2.2 Backlight input signal characteristics

Parameter	Symbol	Min	Typ	Max	Units	Remark
LED Power Supply	VLED	6.0	12.0	21.0	[Volt]	Define as Connector Interface (Ta=25℃)
LED Enable Input High Level	VLED_EN	2.5	-	5.5	[Volt]	
LED Enable Input Low Level		-	-	0.8	[Volt]	
PWM Logic Input High Level	VPWM_EN	2.5	-	5.5	[Volt]	
PWM Logic Input Low Level		-	-	0.8	[Volt]	
PWM Input Frequency	FPWM	200	1K	10 K	Hz	
PWM Duty Ratio	Duty	1	--	100	%	

Note:

1. DO not guarantee the cable loss.

2. If the PWM duty ratio (min) is set between 5% to 1%,the PWM input frequency should be set below 1KHz. The brightness-duty characteristic might not be able to keep in it's linearity if the dimming control is operated in 1% to 5 % range check your Polarizer type.

6. Signal Interface Characteristic

6.1 Pixel Format Image

Following figure shows the relationship of the input signals and LCD pixel format.

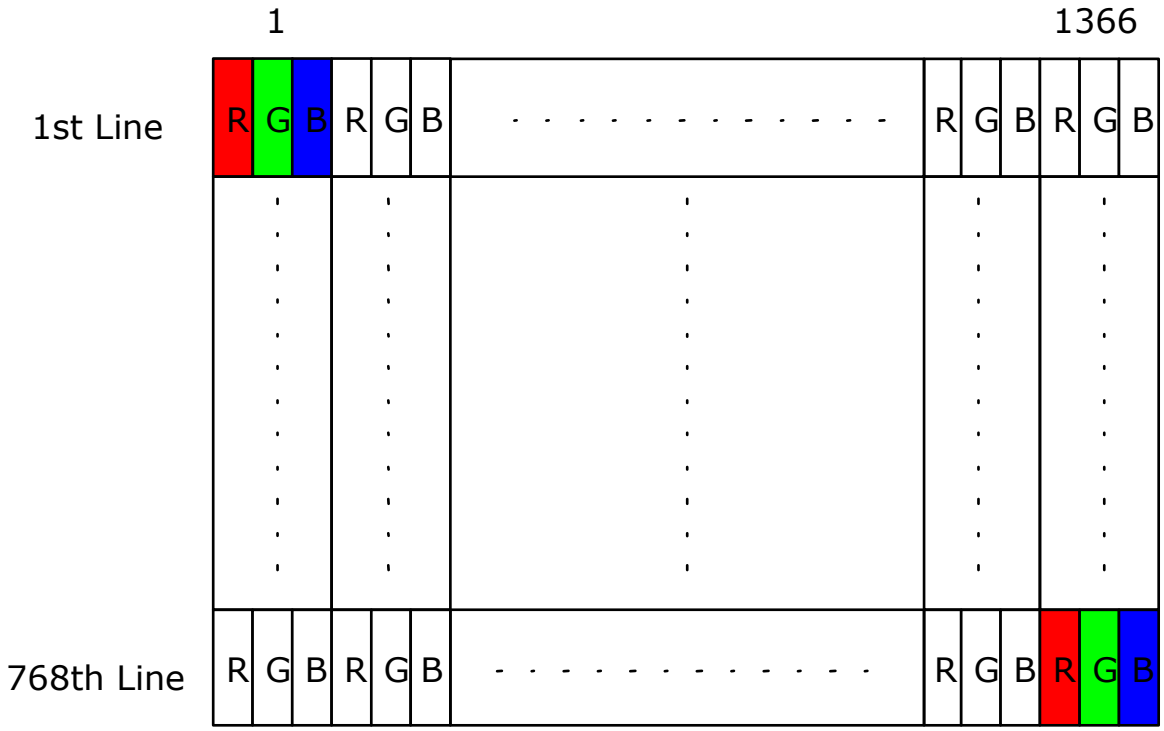

6.2 Integration Interface Requirement

6.2.1 Connector Description

Physical interface is described as for the connector on module.

These connectors are capable of accommodating the following signals and will be following components.

Connector Name / Designation	For Signal Connector
Manufacturer	(I-PEX)
Type / Part Number	I-PEX 20455-030E-12
Mating Housing/Part Number	I-PEX 20453-030T-11

6.2.2 Pin Assignment

Pin	Signal Name	Signal Name	Pin	Signal Name	Signal Name
1	DCR_EN_IN	DCR_EN(NC)	16	LCD_GND	LCD logic and driver ground
2	H_GND	High Speed Ground	17	HPD	HPD signale pin
3	NC	No Connect	18	BL_GND	Backlight ground
4	NC	No Connect	19	BL_GND	Backlight ground
5	H_GND	High Speed Ground	20	BL_GND	Backlight ground
6	Lane0_N	Comp Signal Link Lane 0	21	BL_GND	Backlight ground
7	Lane0_P	True Signal Link Lane 0	22	BL_Enable	Backlight On / Off
8	H_GND	High Speed Ground	23	BL_PWM_DIM	System PWM signal Input
9	AUX_CH_P	True Signal Auxiliary Ch.	24	NC	Reserved for LCD manufacture's use
10	AUX_CH_N	Comp Signal Auxiliary Ch.	25	NC	Reserved for LCD manufacture's use
11	H_GND	High Speed Ground	26	BL_PWR	Backlight power
12	LCD_VCC	LCD logic and driver power	27	BL_PWR	Backlight power
13	LCD_VCC	LCD logic and driver power	28	BL_PWR	Backlight power
14	LCD_Self_Test	LCD Panel Self Test Enable	29	BL_PWR	Backlight power
15	LCD_GND	LCD logic and driver ground	30	CM_EN_IN	CM_EN(NC)

eDP is a differential signal technology for LCD interface and high speed data transfer device.

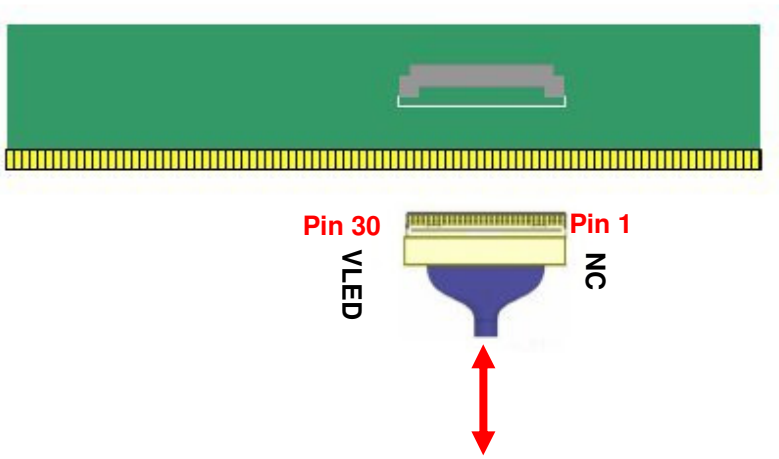

Note1: Input signals shall be low or High-impedance state when VDD is off.

6.3 Interface Timing

Timing Characteristics

Basically, interface timings should match the 1366x768 /60Hz manufacturing guide line timing.

Parameter		Symbol	Min.	Typ.	Max.	Unit
Frame Rate		-		60	-	Hz
Clock frequency		1/ T_{Clock}	66.4	TBD	80	MHz
Vertical Section	Period	T_V	776	TBD	1000	T_{Line}
	Active	T_{VD}	768			
	Blanking	T_{VB}	8	TBD	232	
Horizontal Section	Period	T_H	1426	TBD	2000	T_{Clock}
	Active	T_{HD}	1366			
	Blanking	T_{HB}	60	TBD	634	

6.4 Power ON/OFF Sequence

Power on/off sequence is as follows. Interface signals and LED on/off sequence are also shown in the chart.

Display Port panel power sequence:

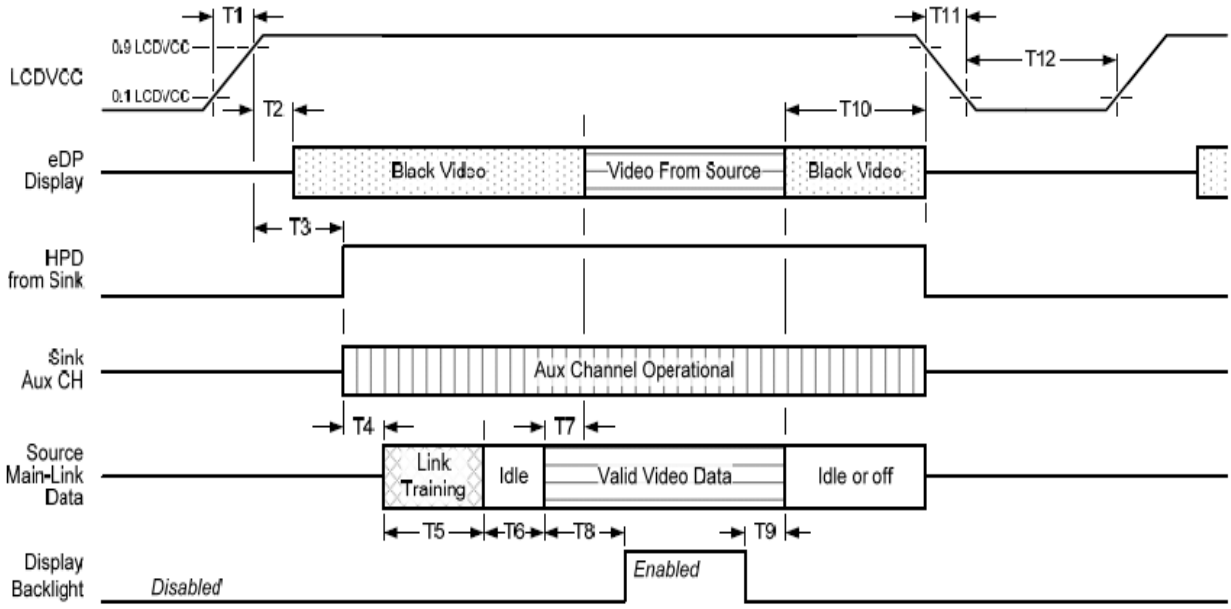

Display port interface power up/down sequence, normal system operation

Display Port AUX_CH transaction only:

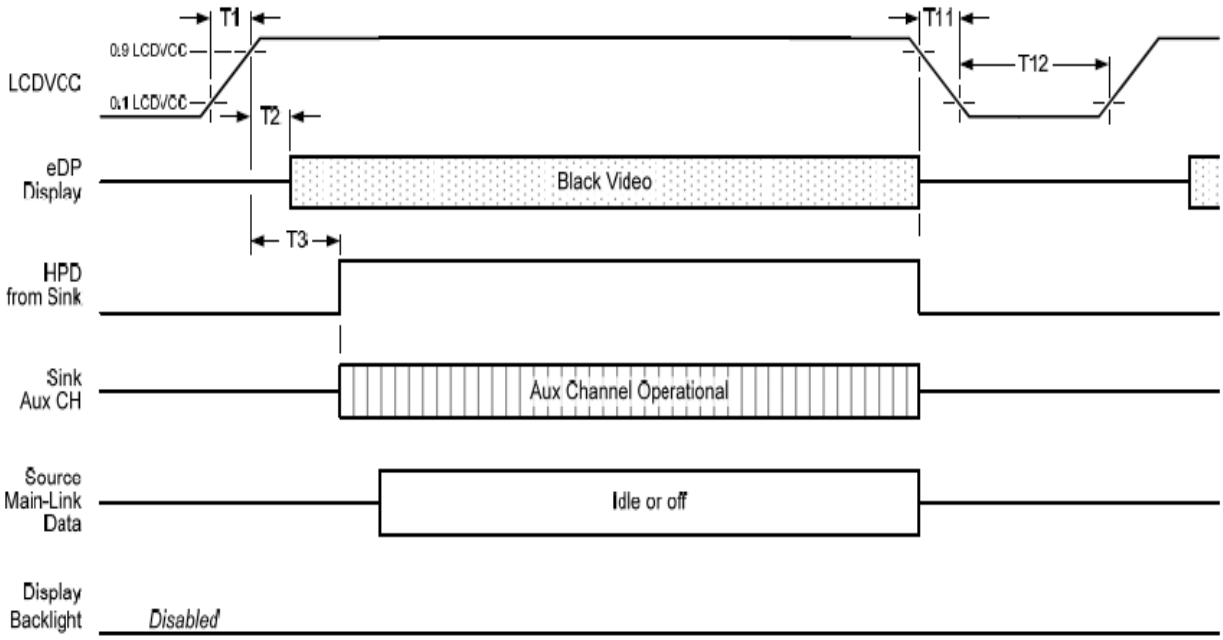

Display port interface power up/down sequence, AUX_CH transaction only

Display Port panel power sequence timing parameter:

Timing parameter	Description	Reqd. by	Limits			Notes
			Min.	Typ.	Max.	
T1	power rail rise time, 10% to 90%	source	0.5ms		10ms	
T2	delay from LCDVDD to black video generation	sink	0ms		200ms	prevents display noise until valid video data is received from the source
T3	delay from LCDVDD to HPD high	sink	0ms		200ms	sink AUX_CH must be operational upon HPD high.
T4	delay from HPD high to link training initialization	source				allows for source to read link capability and initialize.
T5	link training duration	source				dependant on source link to read training protocol.
T6	link idle	source				Min accounts for required BS-Idle pattern. Max allows for source frame synchronization.
T7	delay from valid video data from source to video on display	sink	0ms		50ms	max allows sink validate video data and timing.
T8	delay from valid video data from source to backlight enable	source				source must assure display video is stable.
T9	delay from backlight disable to end of valid video data	source				source must assure backlight is no longer illuminated.
T10	delay from end of valid video data from source to power off	source	0ms		500ms	
T11	power rail fall time, 905 to 10%	source			10ms	
T12	power off time	source	500ms			

Note 1: The sink must include the ability to generate black video autonomously. The sink must automatically enable black video under the following conditions:
-upon LCDVDD power on (with in T2 max)-when the "Novideostream_Flag" (VB-ID Bit 3) is received from the source (at the end of T9).
-when no main link data, or invalid video data, is received from the source. Black video must be displayed within 64ms (typ) from the start of either condition. Video data can be deemed invalid based on MSA and timing information, for example.

Note 2: The sink may implement the ability to disable the black video function, as described in Note 1, above, for system development and debugging purpose.

Note 3: The sink must support AUX_CH polling by the source immediately following LCDVDD power on without causing damage to the sink device (the source can re-try if the sink is not ready). The sink must be able to respond to an AUX_CH transaction with the time specified within T3 max.

Display Port panel B/L power sequence timing parameter:

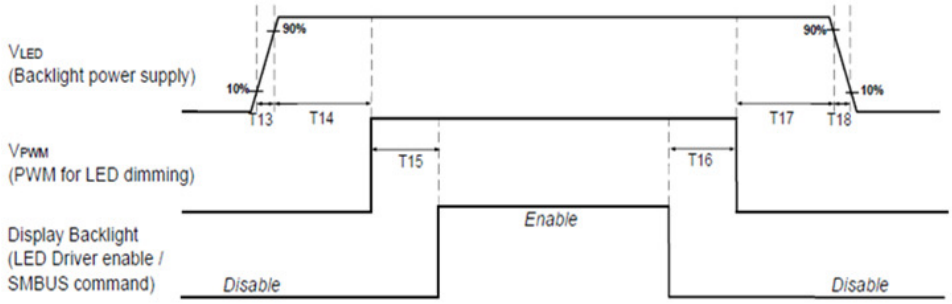

Note : When the adapter is hot plugged, the backlight power supply sequence is shown as below.

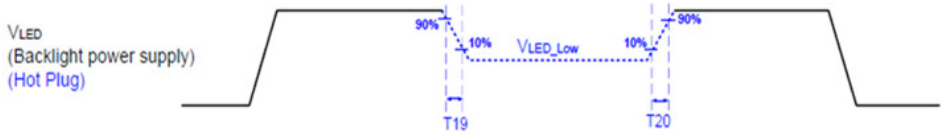

	Min (ms)	Max (ms)
T13	0.5	10
T14	10	-
T15	10	-
T16	10	-
T17	10	-
T18	0.5	10
T19	1*	-
T20	1*	-

Seamless change: T19/T20 = $5xT_{PWM}$*

*T_{PWM}= 1/PWM Frequency

7. Panel Reliability Test

7.1 Vibration Test

Test Spec:

- Test method: Non-Operation
- Acceleration: 1.5 G
- Frequency: 10 - 500Hz Random
- Sweep: 30 Minutes each Axis (X, Y, Z)

7.2 Shock Test

Test Spec:

- Test method: Non-Operation
- Acceleration: 220 G , Half sine wave
- Active time: 2 ms
- Pulse: X,Y,Z .one time for each side

7.3 Reliability Test

Items	Required Condition	Note
Temperature Humidity Bias	Ta= 40℃, 90%RH, 300h	
High Temperature Operation	Ta= 50℃, Dry, 300h	
Low Temperature Operation	Ta= 0℃, 300h	
High Temperature Storage	Ta= 60℃, 35%RH, 300h	
Low Temperature Storage	Ta= -20℃, 50%RH, 250h	
Thermal Shock Test	Ta=-20℃to 60℃, Duration at 30 min, 100 cycles	
ESD	Contact : ±8 KV Air : ±15 KV	Note 1

Note1: According to EN 61000-4-2 , ESD class B: Some performance degradation allowed. No data lost

. Self-recoverable. No hardware failures.

Remark: MTBF (Excluding the LED): 30,000 hours with a confidence level 90%

8. Mechanical Characteristics

8.1 LCM Outline Dimension

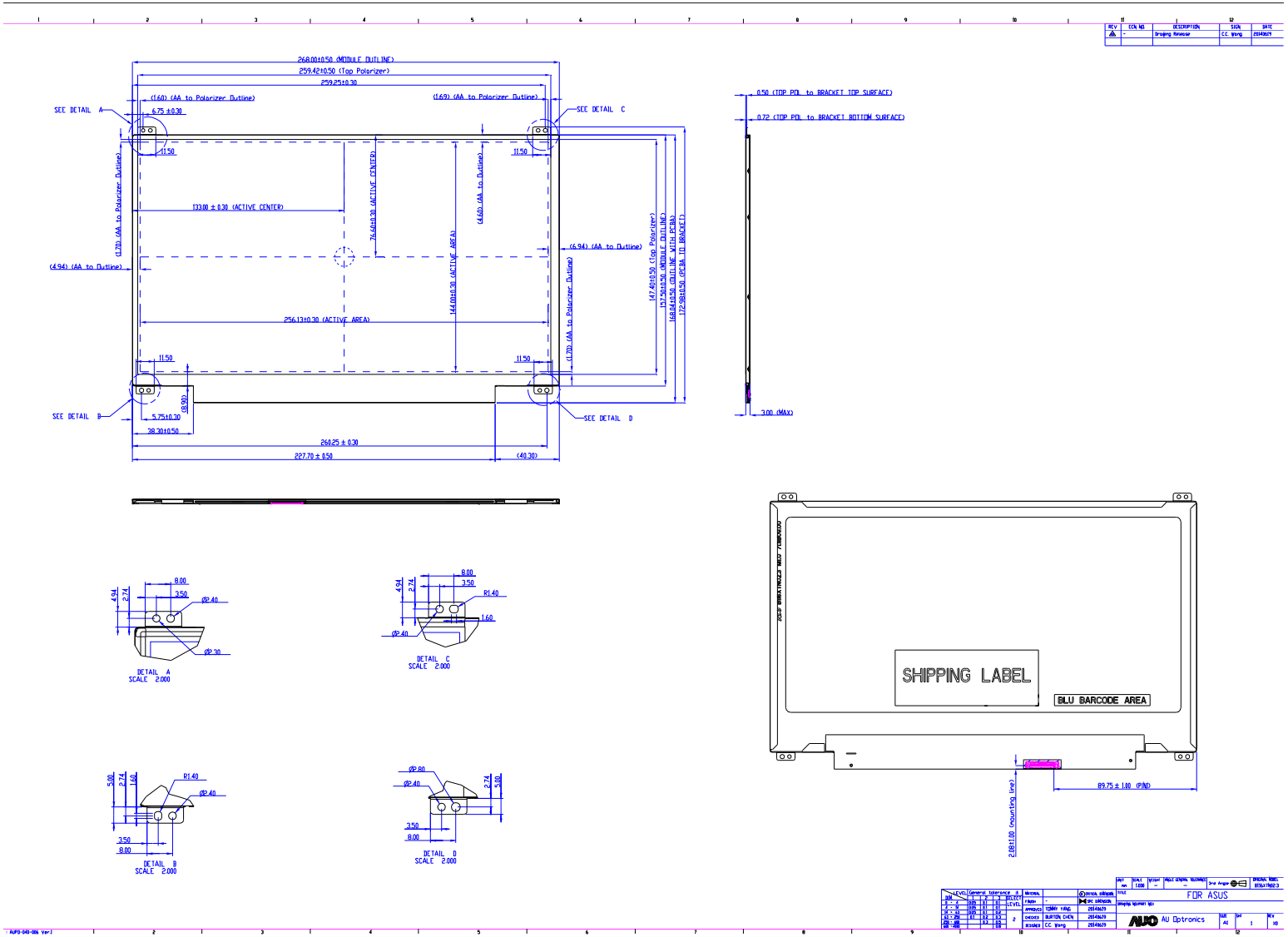

9. Shipping and Package

9.1 Shipping Label Format

Shipping label:

Carton label: TBD

9.2 Carton Package

The outside dimension of carton is 553(L)mm* 275(W)mm* 379(H)mm

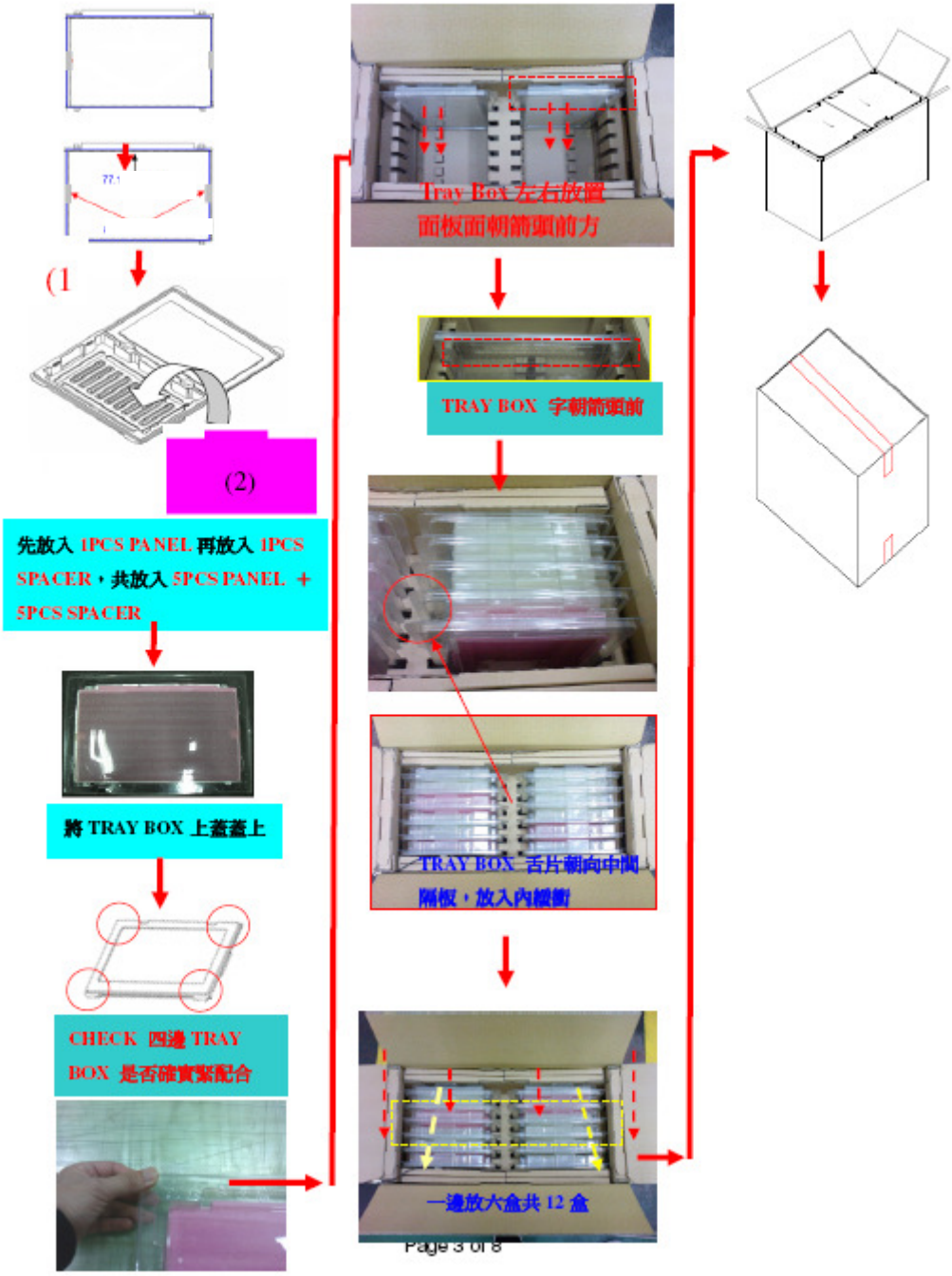

9.3 Shipping Package of Palletizing Sequence

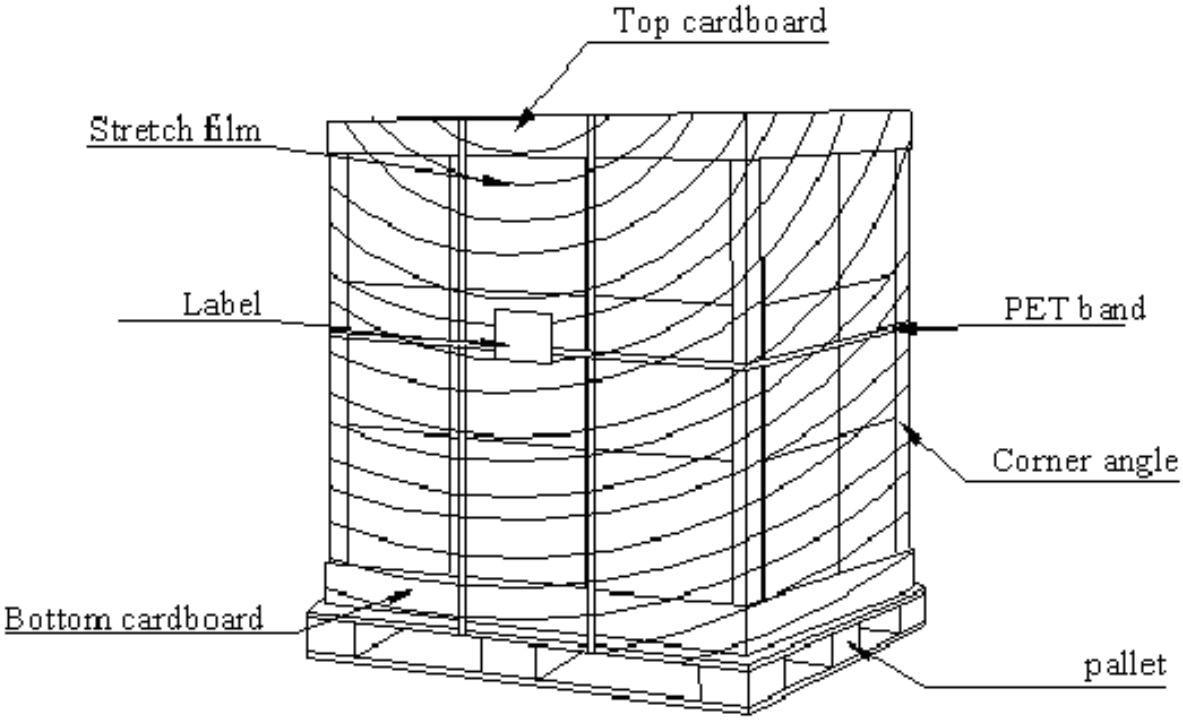

10. Appendix: EDID Description

B116XTN02 3 EDID Code

Address	FUNCTION	Value	Value	Value	Note
HEX		HEX	BIN	DEC	
00	Header	00	00000000	0	
01		FF	11111111	255	
02		FF	11111111	255	
03		FF	11111111	255	
04		FF	11111111	255	
05		FF	11111111	255	
06		FF	11111111	255	
07		00	00000000	0	
08	EISA Manuf. Code LSB	06	00000110	6	
09	Compressed ASCII	AF	10101111	175	
0A	Product Code	5C	01011100	92	
0B	hex, LSB first	23	00100011	35	
0C	32-bit ser #	00	00000000	0	
0D		00	00000000	0	
0E		00	00000000	0	
0F		00	00000000	0	
10	Week of manufacture	01	00000001	1	
11	Year of manufacture	18	00011000	24	
12	EDID Structure Ver.	01	00000001	1	
13	EDID revision #	04	00000100	4	
14	**Video input def.** *(digital I/P, non-TMDS, CRGB)*	95	10010101	149	
15	**Max H image size** *(rounded to cm)*	1A	00011010	26	
16	**Max V image size** *(rounded to cm)*	0E	00001110	14	
17	**Display Gamma** *(=(gamma*100)-100)*	78	01111000	120	
18	**Feature support** *(no DPMS, Active OFF, RGB, tmg Blk#1)*	02	00000010	2	
19	Red/green low bits **(Lower 2:2:2:2 bits)**	6B	01101011	107	
1A	Blue/white low bits **(Lower 2:2:2:2 bits)**	F5	11110101	245	
1B	Red x **(Upper 8 bits)**	91	10010001	145	
1C	Red y/ highER 8 bits	55	01010101	85	
1D	Green x	54	01010100	84	
1E	Green y	91	10010001	145	
1F	Blue x	27	00100111	39	
20	Blue y	22	00100010	34	
21	White x	50	01010000	80	
22	White y	54	01010100	84	
23	Established timing 1	00	00000000	0	
24	Established timing 2	00	00000000	0	
25	Established timing 3	00	00000000	0	
26	Standard timing #1	01	00000001	1	
27		01	00000001	1	
28	Standard timing #2	01	00000001	1	
29		01	00000001	1	
2A	Standard timing #3	01	00000001	1	
2B		01	00000001	1	
2C	Standard timing #4	01	00000001	1	
2D		01	00000001	1	
2E	Standard timing #5	01	00000001	1	
2F		01	00000001	1	
30	Standard timing #6	01	00000001	1	
31		01	00000001	1	
32	Standard timing #7	01	00000001	1	
33		01	00000001	1	
34	Standard timing #8	01	00000001	1	
35		01	00000001	1	
36	Pixel Clock/10000 LSB	CE	11001110	206	
37	Pixel Clock/10000 USB	1D	00011101	29	
38	Horz active **Lower 8bits**	56	01010110	86	
39	Horz blanking **Lower 8bits**	E2	11100010	226	
3A	HorzAct:HorzBlnk **Upper 4:4 bits**	50	01010000	80	
3B	Vertical Active **Lower 8bits**	00	00000000	0	
3C	Vertical Blanking **Lower 8bits**	1E	00011110	30	
3D	Vert Act : Vertical Blanking **(upper 4:4 bit)**	30	00110000	48	
3E	HorzSync. Offset	26	00100110	38	
3F	HorzSync.Width	16	00010110	22	
40	VertSync.Offset : VertSync.Width	36	00110110	54	
41	Horz&Vert Sync Offset/Width **Upper 2bits**	00	00000000	0	
42	Horizontal Image Size **Lower 8bits**	00	00000000	0	
43	Vertical Image Size **Lower 8bits**	90	10010000	144	
44	Horizontal & Vertical Image Size **(upper 4:4 bits)**	10	00010000	16	
45	Horizontal Border *(zero for internal LCD)*	00	00000000	0	
46	Vertical Border *(zero for internal LCD)*	00	00000000	0	
47	Signal *(non-intr, norm, no stero, sep sync, neg pol)*	18	00011000	24	
48	Detailed timing/monitor	00	00000000	0	
49	descriptor #2	00	00000000	0	
4A		00	00000000	0	
4B		0F	00001111	15	
4C		00	00000000	0	
4D		00	00000000	0	
4E		00	00000000	0	
4F		00	00000000	0	
50		00	00000000	0	
51		00	00000000	0	
52		00	00000000	0	
53		00	00000000	0	
54		00	00000000	0	
55		00	00000000	0	
56		00	00000000	0	
57		00	00000000	0	
58		00	00000000	0	
59		20	00100000	32	
5A	Detailed timing/monitor	00	00000000	0	
5B	descriptor #3	00	00000000	0	
5C		00	00000000	0	
5D		FE	11111110	254	
5E		00	00000000	0	
5F	Manufacture	41	01000001	65	A
60	Manufacture	55	01010101	85	U
61	Manufacture	4F	01001111	79	O
62		0A	00001010	10	
63		20	00100000	32	
64		20	00100000	32	
65		20	00100000	32	
66		20	00100000	32	
67		20	00100000	32	
68		20	00100000	32	
69		20	00100000	32	
6A		20	00100000	32	
6B		20	00100000	32	
6C	Detailed timing/monitor	00	00000000	0	
6D	descriptor #4	00	00000000	0	
6E		00	00000000	0	
6F		FE	11111110	254	
70		00	00000000	0	
71	Manufacture P/N	42	01000010	66	B
72	Manufacture P/N	31	00110001	49	1
73	Manufacture P/N	31	00110001	49	1
74	Manufacture P/N	36	00110110	54	6
75	Manufacture P/N	58	01011000	88	X
76	Manufacture P/N	54	01010100	84	T
77	Manufacture P/N	4E	01001110	78	N
78	Manufacture P/N	30	00110000	48	0
79	Manufacture P/N	32	00110010	50	2
7A	Manufacture P/N	2E	00101110	46	.
7B	Manufacture P/N	33	00110011	51	3
7C		20	00100000	32	
7D		0A	00001010	10	
7E	Extension Flag	00	00000000	0	
7F	Checksum	6F	01101111	111	