DATA MODUL
DISPLAY AND EMBEDDED SOLUTIONS

AU Optronics Authorized Distributor

Specification

G/ 3. VE. 1 V2

Preliminary Version: Hsl c 2011

(V) Preliminary Specifications
( ) Final Specifications

Module	15 Inch Color TFT-LCD
Model Name	G150XG03 V4

Customer	**Date**
Checked & Approved by	

Approved by	**Date**
Vito Huang	2011/6/13
Prepared by	
Wennie Lee	2011/6/13

Note: This Specification is subject to change without notice.	General Display Business Division / AU Optronics corporation

AUO Confidential For DATAMODUL Internal Use Only / 2011/6/20

Data Modul AG - www.data-modul.com

Contents

1. Operating Precautions 4
2. General Description 5
2.1 Display Characteristics 5
2.2 Optical Characteristics 6
3. Functional Block Diagram 9
4. Absolute Maximum Ratings 10
4.1 Absolute Ratings of TFT LCD Module 10
4.2 Absolute Ratings of Environment 10
5. Electrical Characteristics 11
5.1 TFT LCD Module 11
5.2 Backlight Unit 13
6. Signal Characteristic 14
6.1 Pixel Format Image 14
6.2 Scanning Direction 14
6.3 Signal Description 15
6.4 The Input Data Format 16
6.5 Interface Timing 17
6.6 Power ON/OFF Sequence 18
7. Connector & Pin Assignment 19
7.1 TFT LCD Module: LVDS Connector 19
7.2 Backlight Unit: LED Driver Connector 20
7.3 LED Connector Pin Assignment 21
9. Mechanical Characteristics 23
9.1 LCM Outline Dimension (Front View) 23
9.2 LCM Outline Dimension (Rear View) 23
10. Label and Packaging 24
10.1 Shipping Label (on the rear side of TFT-LCD display) 24
10.2 Carton Package 24
11 Safety 25
11.1 Sharp Edge Requirements 25
11.2 Materials 25
11.3 Capacitors 25
11.4 National Test Lab Requirement 25

AUO Confidential For DATAMODUL Internal Use Only / 2011/6/20

Data Modul AG - www.data-modul.com

Record of Revision

Version and Date	Page	Old description	New Description
0.0 2011/6/8	All	First Edition	
0.1 2011/6/13	21	H208K-P06N-02B or compatible	3808K-F05N-02R or compatible
		3808K-F06N-02R	H208K-P05N-02B or compatible

AUO Confidential For DATAMODUL Internal Use Only / 2011/6/20

Data Modul AG - www.data-modul.com

1. Operating Precautions

1) Since front polarizer is easily damaged, please be cautious and not to scratch it.
2) Be sure to turn off power supply when inserting or disconnecting from input connector.
3) Wipe off water drop immediately. Long contact with water may cause discoloration or spots.
4) When the panel surface is soiled, wipe it with absorbent cotton or soft cloth.
5) Since the panel is made of glass, it may be broken or cracked if dropped or bumped on hard surface.
6) Since CMOS LSI is used in this module, take care of static electricity and insure human earth when handling.
7) Do not open nor modify the module assembly.
8) Do not press the reflector sheet at the back of the module to any direction.
9) In case if a module has to be put back into the packing container slot after it was taken out from the container, do not press the center of the CCFL Reflector edge. Instead, press at the far ends of the CFL Reflector edge softly. Otherwise the TFT Module may be damaged.
10) At the insertion or removal of the Signal Interface Connector, be sure not to rotate nor tilt the Interface Connector of the TFT Module.
11) TFT-LCD Module is not allowed to be twisted & bent even force is added on module in a very short time. Please design your display product well to avoid external force applying to module by end-user directly.
12) Small amount of materials without flammability grade are used in the TFT-LCD module. The TFT-LCD module should be supplied by power complied with requirements of Limited Power Source (IEC60950 or UL1950), or be applied exemption.
13) Severe temperature condition may result in different luminance, response time.
14) Continuous operating TFT-LCD Module under high temperature environment may accelerate LED light bar exhaustion and reduce luminance dramatically.
15) The data on this specification sheet is applicable when TFT-LCD module is placed in landscape position.
16) Continuous displaying fixed pattern may induce image sticking. It's recommended to use screen saver or moving content periodically if fixed pattern is displayed on the screen.

AUO Confidential For DATAMODUL Internal Use Only / 2011/6/20

Data Modul AG - www.data-modul.com

2. General Description

G150XG03 V4 is a Color Active Matrix Liquid Crystal Display composed of a TFT-LCD display, a driver circuit, and a backlight system. The screen format is intended to support XGA (1024(H) x 768(V)) screen and 16.2M (RGB 8-bits) or 262k colors (RGB 6-bits). All input signals are LVDS interface compatible. All design rules of this module can correspond to PSWG standard.

G150XG03 V4 is designed for industrial display applications.

2.1 Display Characteristics

The following items are characteristics summary on the table under 25 □ condition:

Items	Unit	Specifications
Screen Diagonal	[inch]	15
Active Area	[mm]	304.128(H) x 228.096(V)
Pixels H x V		1024x3(RGB) x 768
Pixel Pitch	[mm]	0.297 x 0.297
Pixel Arrangement		R.G.B. Vertical Stripe
Display Mode		TN, Normally White
Nominal Input Voltage VDD	[Volt]	3.3 typ.
Typical Power Consumption	[Watt]	6.46 (64 Gray Bar Pattern)
Weight	[Grams]	1000g (max.)
Physical Size	[mm]	326.5(H)x 253.5(V) x 12.0(D) (max.)
Electrical Interface		1 channel LVDS
Surface Treatment		Anti-glare, Hardness 3H
Support Color		16.2M / 262K colors
Temperature Range Operating Storage (Non-Operating)	 [℃] [℃]	 -30 to +85 -30 to +85
RoHS Compliance		RoHS Compliance

AUO Confidential For DATAMODUL Internal Use Only / 2011/6/20

Data Modul AG - www.data-modul.com

2.2 Optical Characteristics

The optical characteristics are measured under stable conditions at 25 (Room Temperature):

Item	Unit	Conditions	Min.	Typ.	Max.	Note
White Luminance	[cd/m2]		200	250	-	1
Uniformity	%	9 Points	75	80	-	1, 2, 3
Contrast Ratio			400	700	-	4
Cross talk	%		-	1.2	1.5	5
Response Time	[msec]	Rising	-	5.7		6
	[msec]	Falling	-	2.3		
	[msec]	Raising + Falling	-	8		
Viewing Angle	[degree] [degree]	Horizontal (Right) CR = 10 (Left)	70 70	80 80	- -	7
	[degree] [degree]	Vertical (Upper) CR = 10 (Lower)	60 50	70 60	- -	
Color / Chromaticity Coordinates (CIE 1931)		Red x	TBD	TBD	TBD	
		Red y	TBD	TBD	TBD	
		Green x	TBD	TBD	TBD	
		Green y	TBD	TBD	TBD	
		Blue x	TBD	TBD	TBD	
		Blue y	TBD	TBD	TBD	
		White x	0.263	0.313	0.363	
		White y	0.279	0.329	0.379	
Color Gamut	%		60	65	-	

Note 1: Measurement method

Equipment Pattern Generator, Power Supply, Digital Voltmeter, Luminance meter (SR_3 or equivalent)

Aperture 1□with 50cm viewing distance

Test Point Center

Environment *< 1 lux*

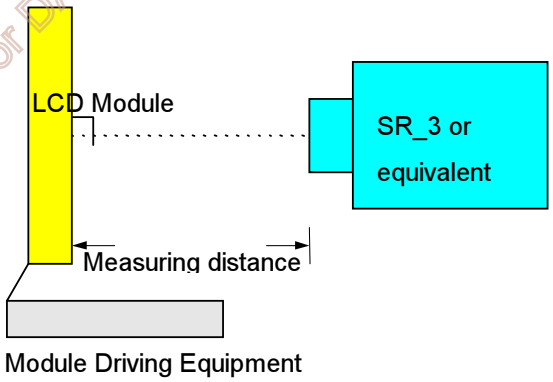

AUO Confidential For DATAMODUL Internal Use Only / 2017/6/20

Data Modul AG - www.data-modul.com

Note 2: Definition of 9 points position (Display active area : 304.128(H) x 228.096(V))

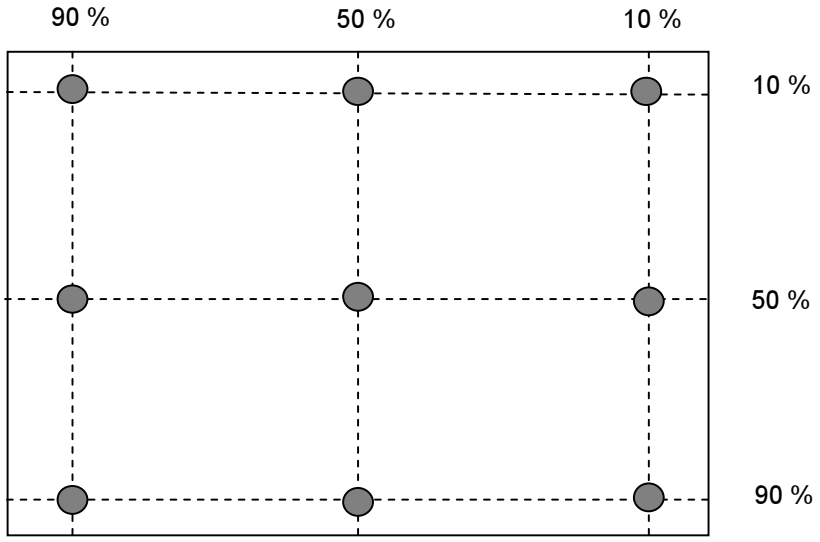

Note 3: The luminance uniformity of 9 points is defined by dividing the minimum luminance values by the maximum test point luminance

$$\delta_{W9} = \frac{\text{Minimum Brightness of nine points}}{\text{Maximum Brightness of nine points}}$$

Note 4： Definition of contrast ratio (CR):

$$\text{Contrast ratio (CR)} = \frac{\text{Brightness on the “White” state}}{\text{Brightness on the “Black” state}}$$

Note 5： Definition of cross talk (CT)

CT = | YB – YA | / YA × 100 (%)
Where
YA = Luminance of measured location without gray level 0 pattern (cd/m2)
YB = Luminance of measured location with gray level 0 pattern (cd/m2)

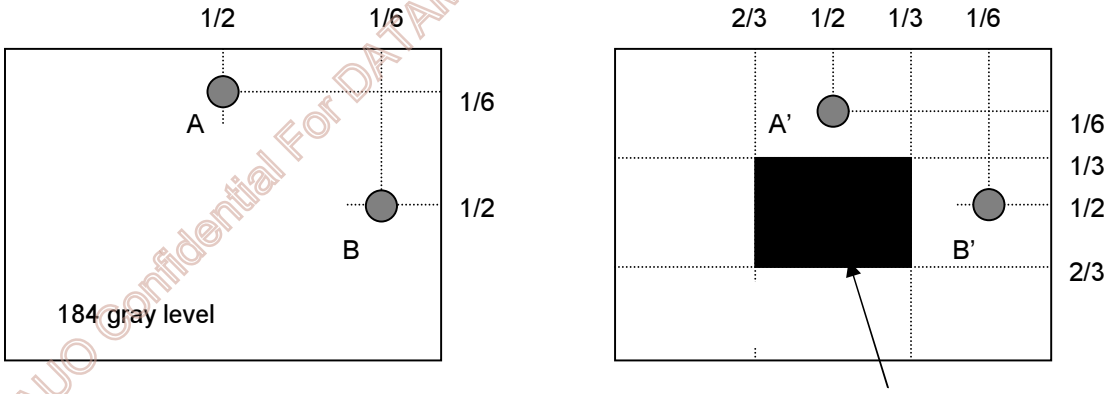

AUO Confidential For DATAMODUL Internal Use Only / 2011/6/20

Data Modul AG - www.data-modul.com

Note 6: Definition of response time:

The output signals of photo detector are measured when the input signals are changed from “White” to “Black” (falling time) and from “Black” to “White” (rising time), respectively. The response time interval is between 10% and 90% of amplitudes. Please refer to the figure as below.

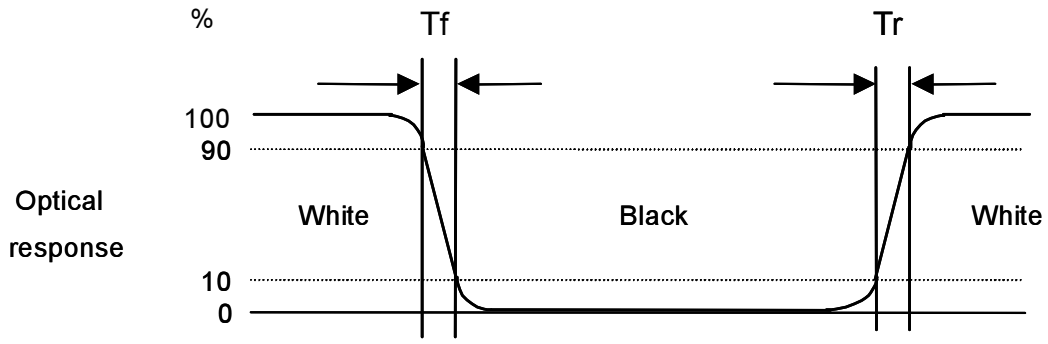

Note 7: Definition of viewing angle

Viewing angle is the measurement of contrast ratio □10, at the screen center, over a 180° horizontal and 180° vertical range (off-normal viewing angles). The 180° viewing angle range is broken down as below: 90° (θ) horizontal left and right, and 90° (Φ) vertical high (up) and low (down). The measurement direction is typically perpendicular to the display surface with the screen rotated to its center to develop the desired measurement viewing angle.

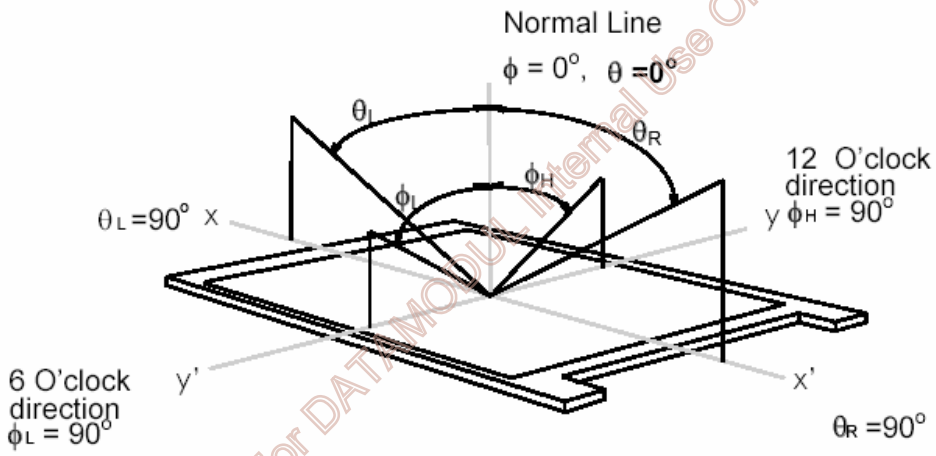

AUO Confidential For DATA MODUL Internal Use Only / 2011/6/20

Data Modul AG - www.data-modul.com

3. Functional Block Diagram

The following diagram shows the functional block of the 15 inch color TFT/LCD module:

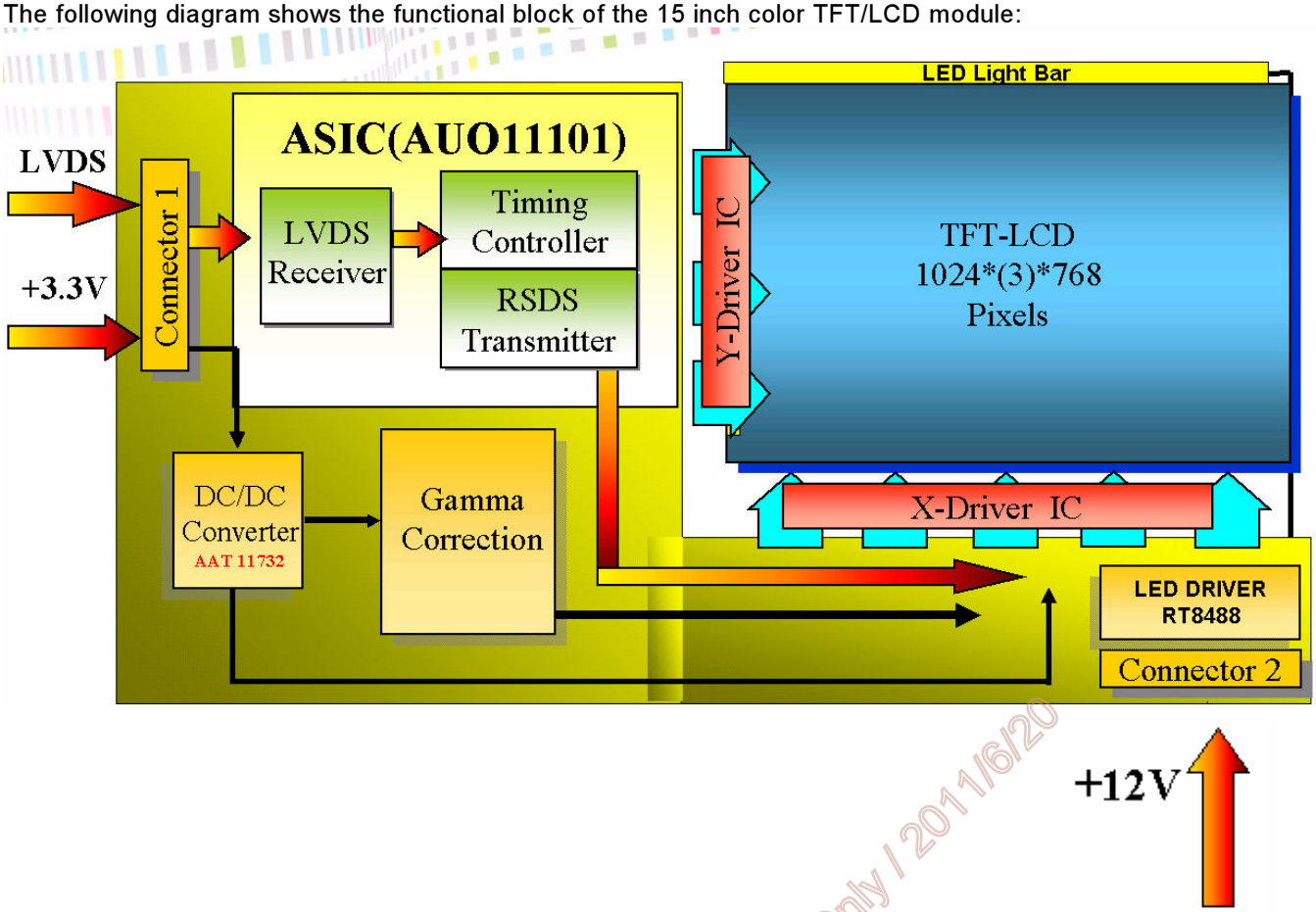

AUO Confidential For DATAMODUL Internal Use Only / 2011/6/20

Data Modul AG - www.data-modul.com

4. Absolute Maximum Ratings

4.1 Absolute Ratings of TFT LCD Module

Item	Symbol	Min	Max	Unit
Logic/LCD Drive Voltage	Vin	-0.3	+3.6	[Volt]

4.2 Absolute Ratings of Environment

Item	Symbol	Min	Max	Unit
Operating Temperature	TOP	-30	+85	[°C]
Operation Humidity	HOP	8	90	[%RH]
Storage Temperature	TST	-30	+85	[°C]
Storage Humidity	HST	8	90	[%RH]

Note: Maximum Wet-Bulb should be 39□ and no condensation.

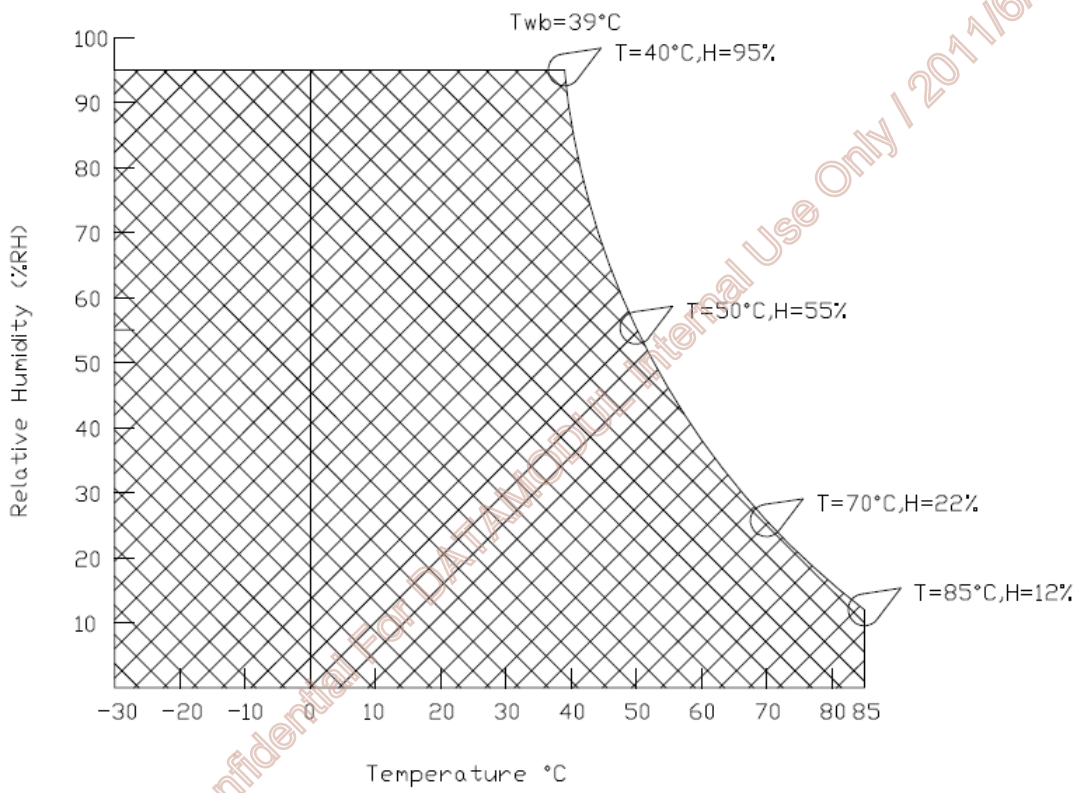

AUO Confidential For DATA MODUL Internal Use Only / 2011/6/20

Data Modul AG - www.data-modul.com

5. Electrical Characteristics

5.1 TFT LCD Module

5.1.1 Power Specification

Symbol	Parameter	Min	Typ	Max	Units	Remark
VDD	Logic/LCD Drive Voltage	3.0	3.3	3.6	[Volt]	±10%
IDD	VDD Current	-	550	660	[mA]	64 Gray Bar Pattern (VDD=3.3V, at 60Hz)
Irush	LCD Inrush Current	-	-	3	[A]	Note 1
PDD	VDD Power	-	1.9	2.2	[Watt]	64 Gray Bar Pattern (VDD=3.3V, at 60Hz)

Note 1: Measurement condition:

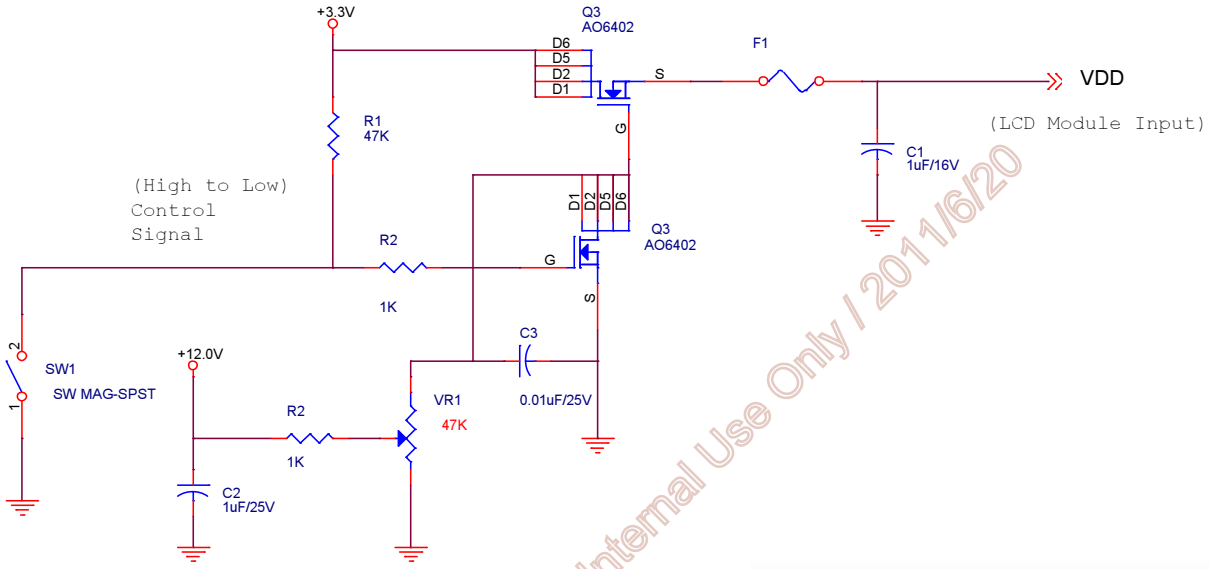

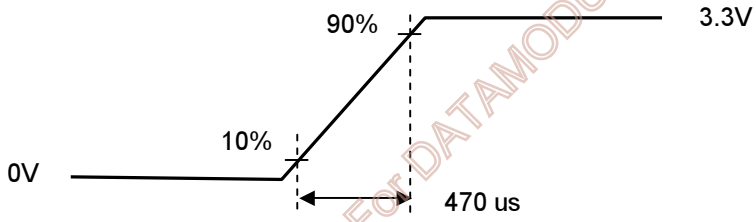

VDD rising time

64 Gray pattern

AUO Confidential For DATAMODUL Internal Use Only / 2011/6/20

Data Modul AG - www.data-modul.com

5.1.2 Signal Electrical Characteristics

Input signals shall be low or Hi-Z state when VDD is off.

Symbol	Item	Min.	Typ.	Max.	Unit	Remark
VTH	Differential Input High Threshold	-	-	100	[mV]	VCM=1.2V
VTL	Differential Input Low Threshold	-100	-	-	[mV]	VCM=1.2V
| VID |	Input Differential Voltage	100	400	600	[mV]	
VICM	Differential Input Common Mode Voltage	1.1		1.45	[V]	VTH/VTL=±100mV

Note: LVDS Signal Waveform.

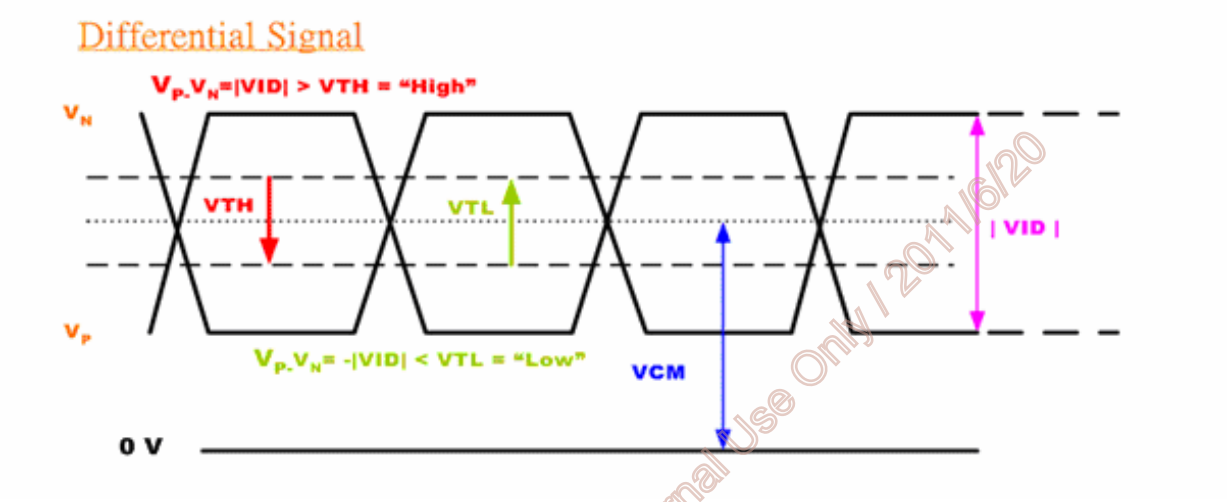

AUO Confidential For DATAMODUL Internal Use Only / 2011/6/20

5.2 Backlight Unit

5.2.1 Parameter guideline for LED

Following characteristics are measured under stable condition using a LED driving board at 25□ (Room Temperature).

Symbol	Parameter	Min	Typ	Max	Unit	Remark
Vcc	Input Voltage	10.8	12	12.6	Volt	
Ivcc	Input Curent	-	0.38	-	A	100% Dimming
P_{LED}	Power Consumption	-	4.56	-	Watt	100% Dimming
F_{PWM}	PWM Dimming Frequency	200	-	20k	Hz	
	Swing Voltage	4.5	5	5.5		
	Dimming Duty Cycle	5	-	100	%	
Vanalog	Analog Dimming Voltage	2.0	5	5.5		5V, 100% Brightness
I_F	LED Forward Current	-	80	84	mA	Ta = 25°C
Operating Life		50000	-	-	Hrs	Ta = 25°C

Note 1: Ta means ambient temperature of TFT-LCD module.

Note 2: If G150XG03 V4 module is driven at high ambient temperature & humidity condition. The operating life will be reduced.

Note 3: Operating life means brightness goes down to 50% initial brightness. Min. operating life time is estimated data.

AUO Confidential For DATAMODUL Internal Use Only / 2014/6/20

Data Modul AG - www.data-modul.com

6. Signal Characteristic

6.1 Pixel Format Image

Following figure shows the relationship between input signal and LCD pixel format.

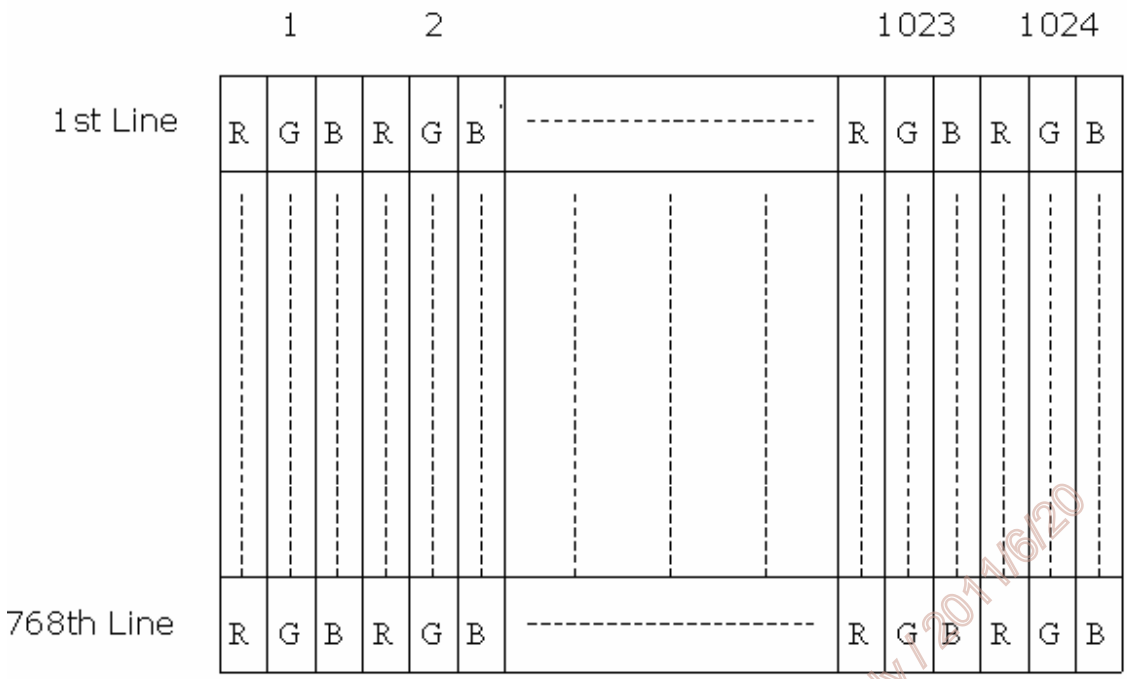

6.2 Scanning Direction

The following figures show the image seen from the front view. The arrow indicates the direction of scan.

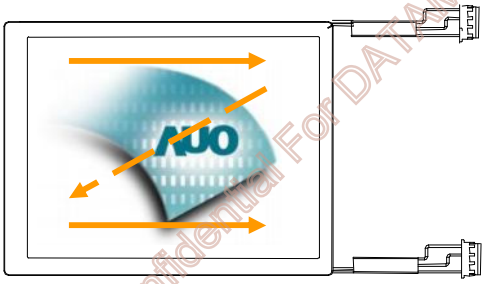

Fig. 1 Normal scan (Pin4, REV = Low or NC)

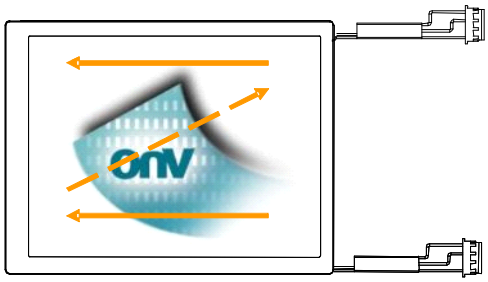

Fig. 2 Reverse scan (Pin4, REV = High)

AUO Confidential For DATAMODUL Internal Use Only / 2011/6/20

Data Modul AG - www.data-modul.com

6.3 Signal Description

The module using a pair of LVDS receiver SN75LVDS82(Texas Instruments) or compatible. LVDS is a differential signal technology for LCD interface and high speed data transfer device. Transmitter shall be SN75LVDS83(negative edge sampling) or compatible. The first LVDS port(RxOxxx) transmits odd pixels while the second LVDS port(RxExxx) transmits even pixels.

3804-F20N-06R (E&T) / MSB240420E(STM)		
Pin No.	**Symbol**	**Description**
1	VDD	Power Supply, 3.3V (typical)
2	VDD	Power Supply, 3.3V (typical)
3	VSS	Ground
4	REV	Reverse Scan selection *.Note1
5	Rin1-	- LVDS differential data input (R0-R5, G0)
6	Rin1+	+ LVDS differential data input (R0-R5, G0)
7	VSS	Ground
8	Rin2-	- LVDS differential data input (G1-G5, B0-B1)
9	Rin2+	+ LVDS differential data input (G1-G5, B0-B1)
10	VSS	Ground
11	Rin3-	- LVDS differential data input (B2-B5, HS, VS, DE)
12	Rin3+	+ LVDS differential data input (B2-B5, HS, VS, DE)
13	VSS	Ground
14	ClkIN-	- LVDS differential clock input
15	ClkIN+	+ LVDS differential clock input
16	GND	Ground
17	Rin4-	- LVDS differential data input (R6-R7, G6-G7,B6-B7) ***Note2**
18	Rin4+	- LVDS differential data input (R6-R7, G6-G7,B6-B7) ***Note2**
19	VSS	Ground
20	SEL68	Selection for 6 bits/8bits LVDS data input ***Note1,3**

Note 1: Input signals shall be in low status when VDD is off.

Note 2: If only the 6 bits mode is needed, pin 17 and pin 18 are suggested to be floated. (In this situation, 8 bits mode will be disable permanently)

Note 3: High stands for “3.3V”, Low stands for “GND”, NC stands for “No Connection”.

AUO Confidential For DATAMODUL Internal Use Only / 2011/6/20

Data Modul AG - www.data-modul.com

6.4 The Input Data Format

6.4.1 SEL68

SEL68 = ”High” or “NC” for 6 bits LVDS Input

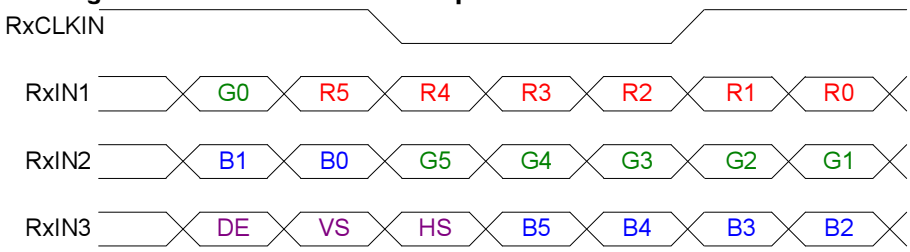

SEL68 = “Low” for 8 bits LVDS Input

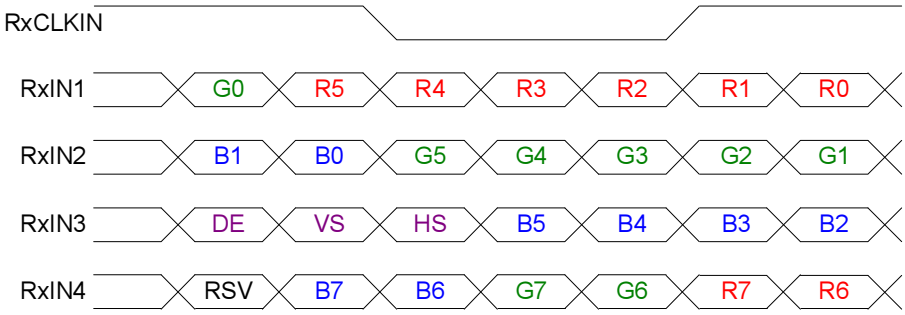

Note1: Please follow PSWG.
Note2: R/G/B data 7:MSB, R/G/B data 0:LSB

Signal Name	Description	Remark
R7 R6 R5 R4 R3 R2 R1 R0	Red Data 7 Red Data 6 Red Data 5 Red Data 4 Red Data 3 Red Data 2 Red Data 1 Red Data 0	Red-pixel Data For 8Bits LVDS input MSB: R7 ; LSB: R0 For 6Bits LVDS input MSB: R5 ; LSB: R0
G7 G6 G5 G4 G3 G2 G1 G0	Green Data 7 Green Data 6 Green Data 5 Green Data 4 Green Data 3 Green Data 2 Green Data 1 Green Data 0	Green-pixel Data For 8Bits LVDS input MSB: G7 ; LSB: G0 For 6Bits LVDS input MSB: G5 ; LSB: G0
B7 B6 B5 B4 B3 B2 B1 B0	Blue Data 7 Blue Data 6 Blue Data 5 Blue Data 4 Blue Data 3 Blue Data 2 Blue Data 1 Blue Data 0	Blue-pixel Data For 8Bits LVDS input MSB: B7 ; LSB: B0 For 6Bits LVDS input MSB: B5 ; LSB: B0
RxCLKIN	LVDS Data Clock	
DE	Data Enable Signal	When the signal is high, the pixel data shall be valid to be displayed.
VS	Vertical Synchronous Signal	
HS	Horizontal Synchronous Signal	

Note: Output signals from any system shall be low or Hi-Z state when VDD is off.

AUO Confidential for DATAMODUL Internal Use Only / 2014/6/20

Data Modul AG - www.data-modul.com

6.5 Interface Timing

6.5.1 Timing Characteristics

Signal	Parameter		Symbol	Min.	Typ.	Max.	Unit
Clock Timing	Clock frequency		$1/T_{Clock}$	50	65	81	MHz
Vsync Timing	Vertical Section	Period	T_V	776	806	900	T_{Line}
		Active	T_{VD}	768	768	768	
		Blanking	T_{VB}	8	38	132	
Hsync Timing	Horizontal Section	Period	T_H	1054	1344	2048	T_{Clock}
		Active	T_{HD}	1024	1024	1024	
		Blanking	T_{HB}	30	320	1024	
Frame Rate			F	50	60	75	Hz

Note: DE mode only.
Note : Typical value refer to VESA STANDARD

6.5.2 Input Timing Diagram

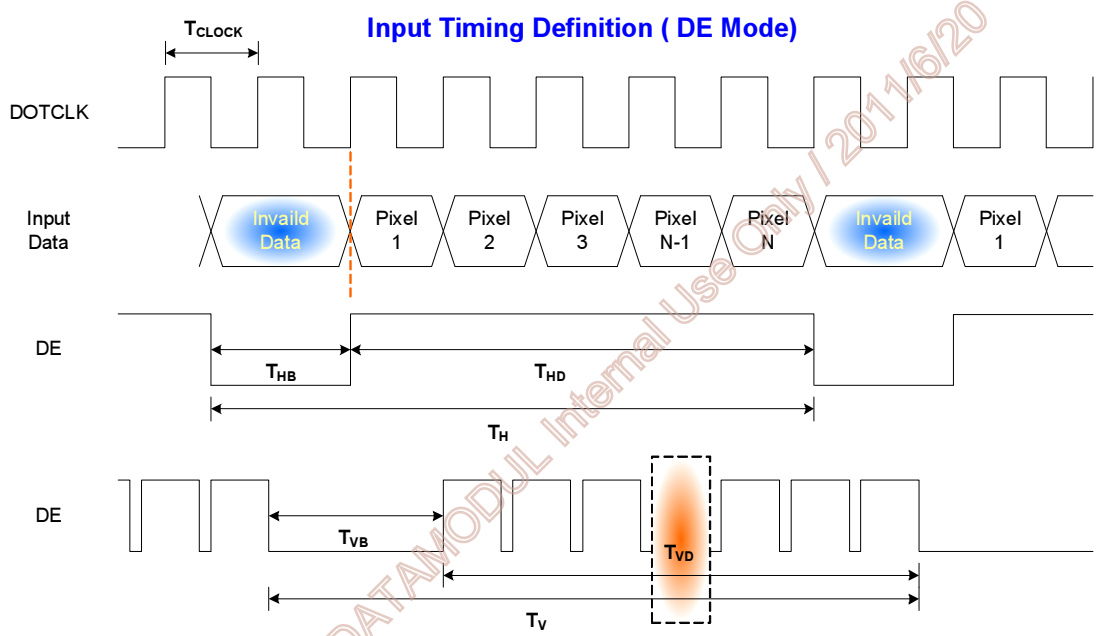

AUO Confidential For DATAMODUL Internal Use Only / 2011/6/20

Data Modul AG - www.data-modul.com

6.6 Power ON/OFF Sequence

VDD power and LED on/off sequence is as below. Interface signals are also shown in the chart. Signals from any system shall be Hi-Z state or low level when VDD is off.

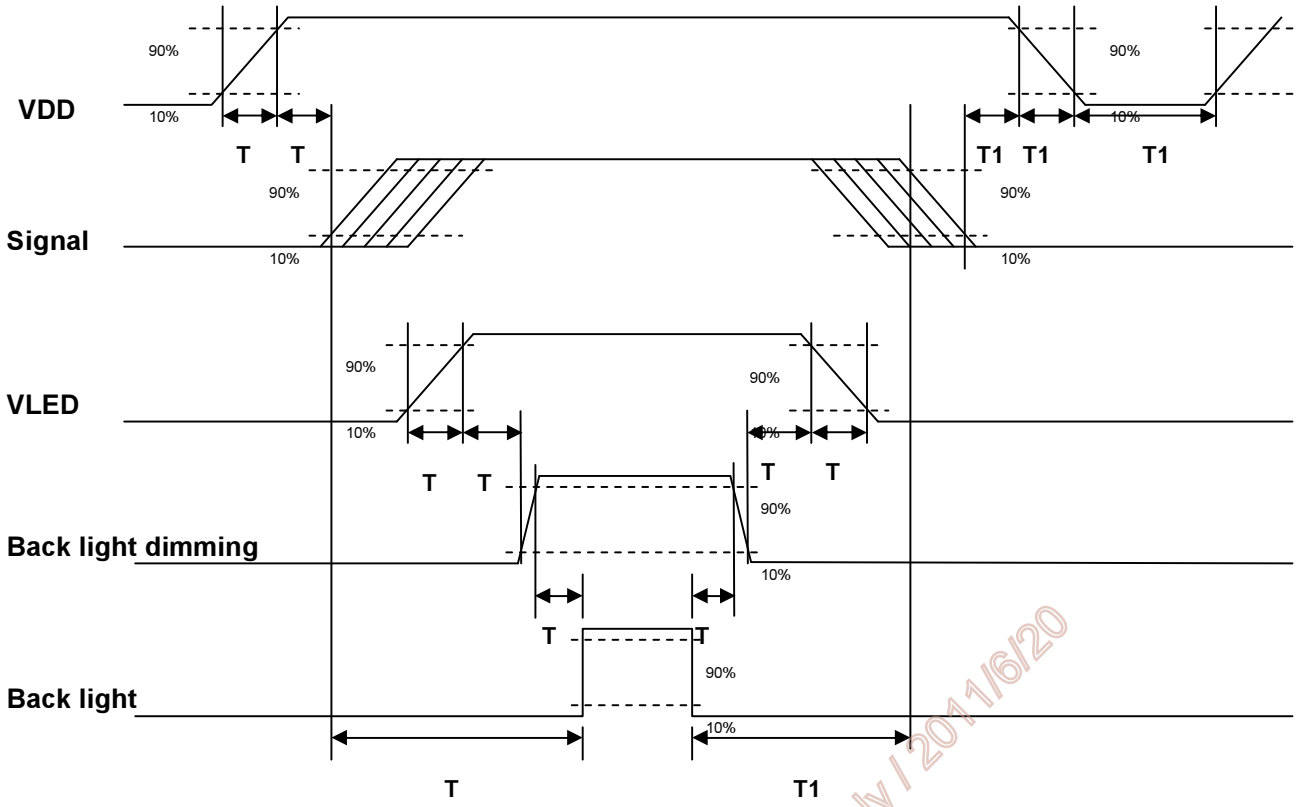

Power ON/OFF sequence timing

Parameter	Value			Units
	Min.	Typ.	Max.	
T1	0.5	--	10	[ms]
T2	30	40	50	[ms]
T3	200	--	--	[ms]
T4	0.5	--	10	[ms]
T5	10	--	--	[ms]
T6	10	--	--	[ms]
T7	0	--	--	[ms]
T8	10	--	--	[ms]
T9	--	--	10	[ms]
T10	110	--	--	[ms]
T11	0	16	50	[ms]
T12	--	--	10	[ms]
T13	1000	--	--	[ms]

The above on/off sequence should be applied to avoid abnormal function in the display. Please make sure to turn off the power when you plug the cable into the input connector or pull the cable out of the connector.

AUO Confidential For DATAMODUL Internal Use Only / 2011/6/20

Data Modul AG - www.data-modul.com

7. Connector & Pin Assignment

Physical interface is described as for the connector on module. These connectors are capable of accommodating the following signals and will be following components.

7.1 TFT LCD Module: LVDS Connector

Connector Name / Designation	Signal Connector
Manufacturer	E&T or compatible
Connector Model Number	3804-F20N-06R / MSB240420E
Adaptable Plug	HRS DF14-20S-1.25C

Pin#	Signal Name	Pin#	Signal Name
1	VDD	2	VDD
3	VSS	4	REV
5	Rin1-	6	Rin1+
7	VSS	8	Rin2-
9	Rin2+	10	VSS
11	Rin3-	12	Rin3+
13	VSS	14	ClkIN-
15	ClkIN+	16	GND
17	Rin4-	18	Rin4+
19	VSS	20	SEL68

AUO Confidential For DATAMODUL Internal Use Only / 2011/6/20

Data Modul AG - www.data-modul.com

7.1.1 Connector Illustration

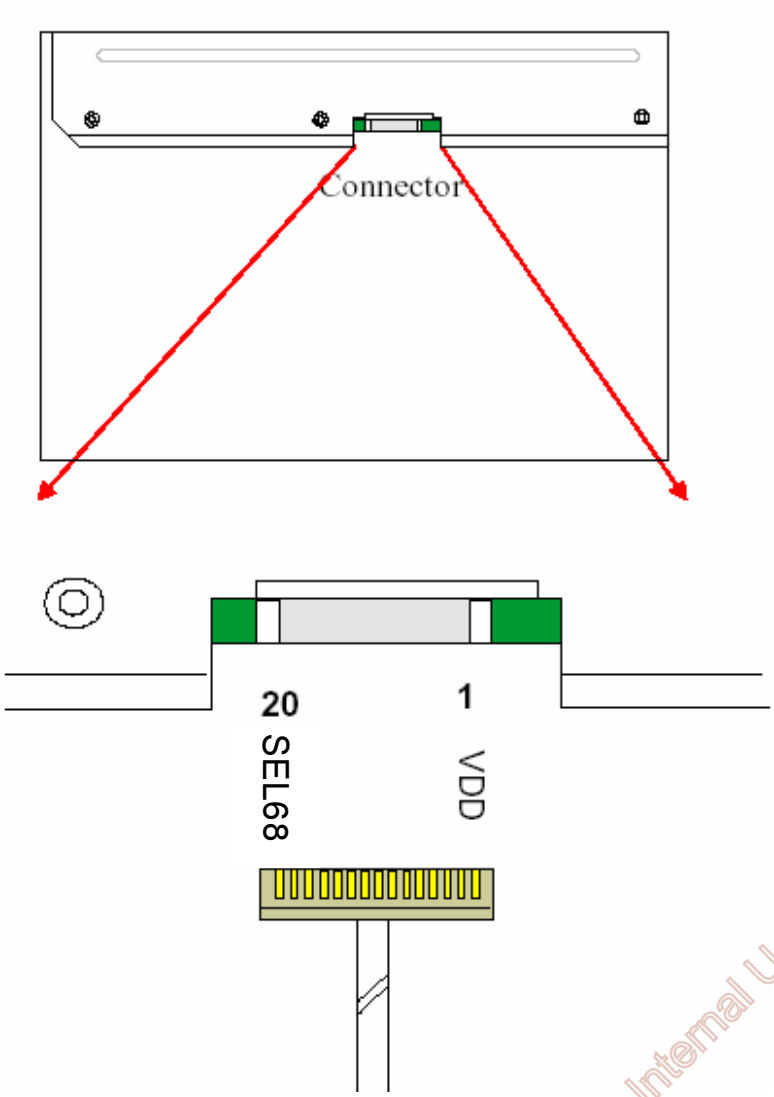

AUO Confidential For DATAMODUL Internal Use Only / 2011/6/20

Data Modul AG - www.data-modul.com

7.2 Backlight Unit: LED Driver Connector

Connector Name / Designation	LED Driver Connector
Manufacturer	ENTERY or compatible
Connector Model Number	3808K-F05N-02R or compatible
Mating Model Number	H208K-P05N-02B or compatible

7.3 LED Connector Pin Assignment

Pin#	Symbol	Signal Name
1	Vcc	12V
2	GND	GND
3	Enable	5V-On / 0V-Off
4	Dimming	PWM Dimming or Analog Dimming
5	NC	NC

AUO Confidential For DATAMODUL Internal Use Only / 2011/6/20

Data Modul AG - www.data-modul.com

8. Reliability Test Criteria

Items	Required Condition	Note
Temperature Humidity Bias	50℃/80%,300 hours	
High Temperature Operation	85℃,300 hours	
Low Temperature Operation	-30℃,300 hours	
Hot Storage	85℃,300 hours	
Cold Storage	-30℃,300 hours	
Thermal Shock Test	-20℃/30 min ,60□/30 min ,100cycles	
Shock Test (Non-Operating)	50G,20ms,Half-sine wave,(±X, ±Y, ±Z)	
Vibration Test (Non-Operating)	1.5G, (10~200Hz, P-P) 30 mins/axis (X, Y, Z)	
On/off test	On/10 sec, Off/10 sec, 30,000 cycles	
ESD	Contact Discharge: ± 8KV, 150pF(330Ω) 1sec, 8 points, 25 times/ point Air Discharge: ± 15KV, 150pF(330Ω) 1sec, 8 points, 25 times/ point	Note 1

Note1: According to EN61000-4-2, ESD class B: Some performance degradation allowed. No data lost

. Self-recoverable. No hardware failures.

AUO Confidential For DATAMODUL Internal Use Only / 2011/8/26

Data Modul AG - www.data-modul.com

9. Mechanical Characteristics

9.1 LCM Outline Dimension (Front View)

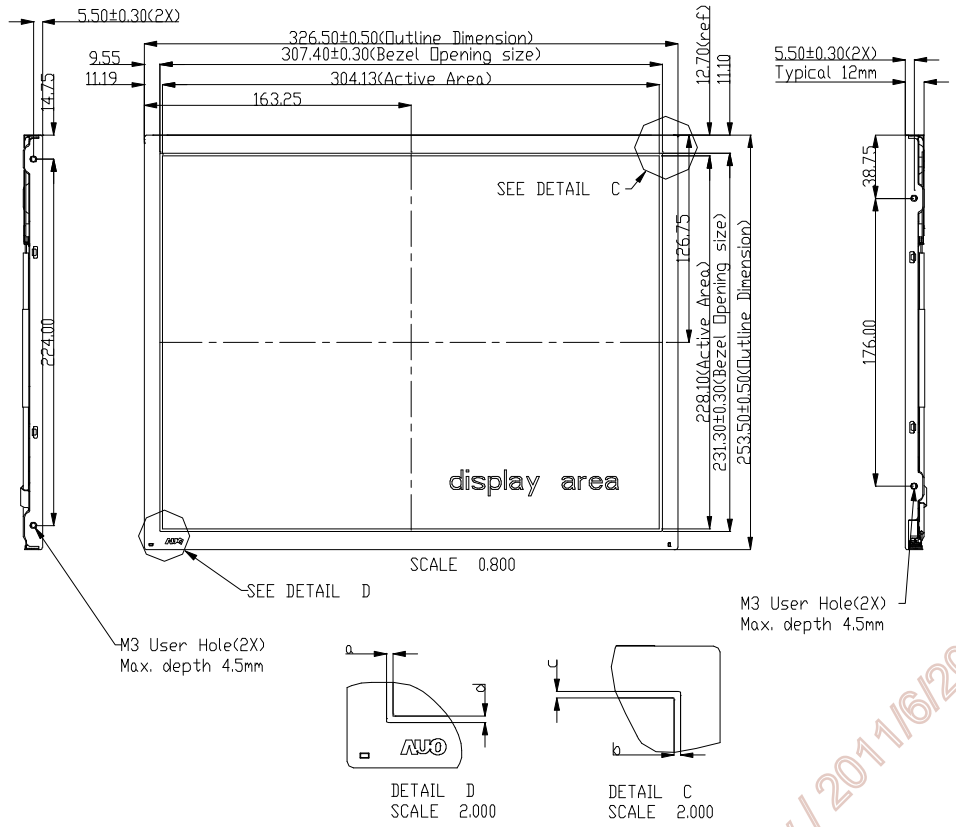

9.2 LCM Outline Dimension (Rear View)

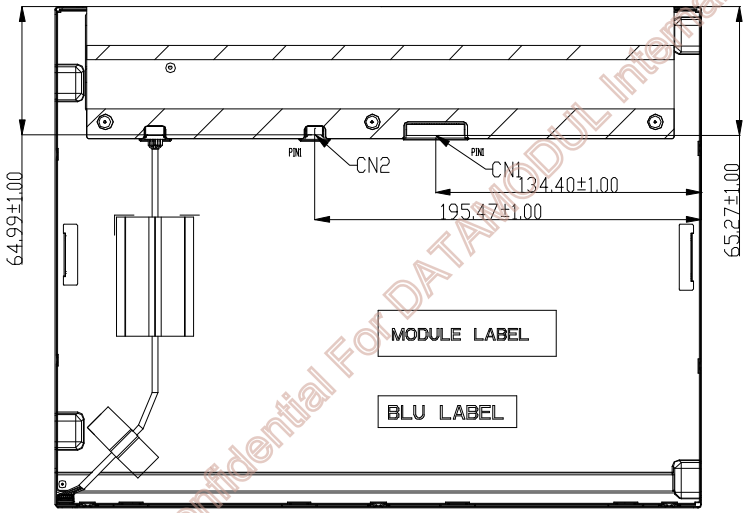

AUO Confidential For DATAMODUL Internal Use Only / 2011/6/20

Data Modul AG - www.data-modul.com

10. Label and Packaging

10.1 Shipping Label (on the rear side of TFT-LCD display)

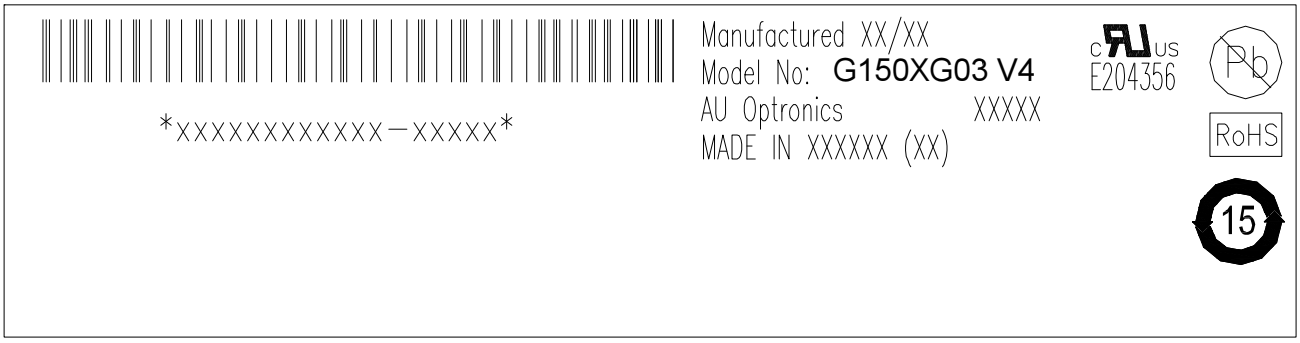

10.2 Carton Package

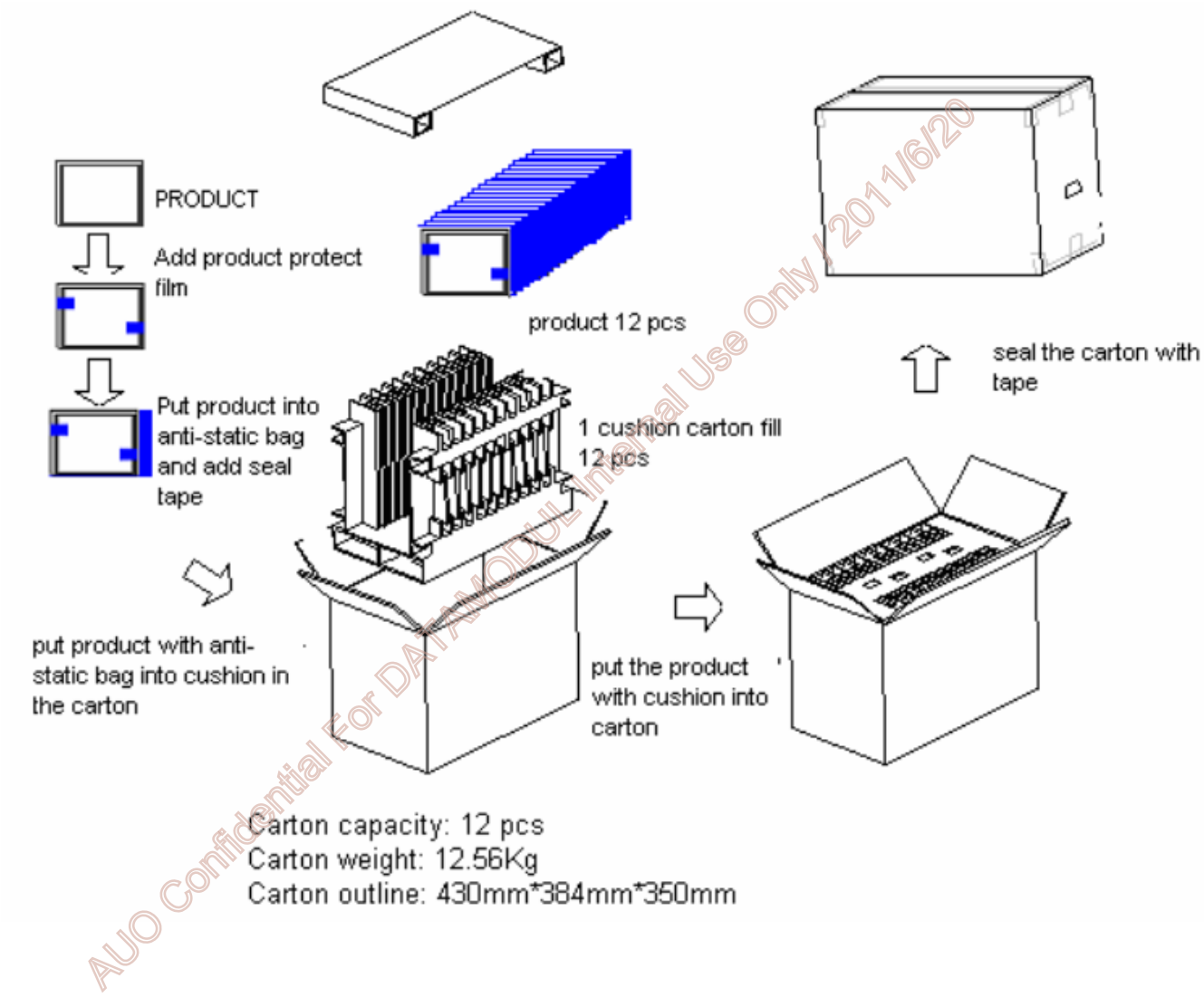

AUO Confidential For DATA MODUL Internal Use Only / 2011/6/20

Data Modul AG - www.data-modul.com

11 Safety

11.1 Sharp Edge Requirements

There will be no sharp edges or comers on the display assembly that could cause injury.

11.2 Materials

11.2.1 Toxicity

There will be no carcinogenic materials used anywhere in the display module. If toxic materials are used, they will be reviewed and approved by the responsible AUO toxicologist.

11.2.2 Flammability

All components including electrical components that do not meet the flammability grade UL94-V1 in the module will complete the flammability rating exception approval process.

The printed circuit board will be made from material rated 94-V1 or better. The actual UL flammability rating will be printed on the printed circuit board.

11.3 Capacitors

If any polarized capacitors are used in the display assembly, provisions will be made to keep them from being inserted backwards.

11.4 National Test Lab Requirement

The display module will satisfy all requirements for compliance to:

UL 1950, First Edition	U.S.A. Information Technology Equipment

AUO Confidential For DATAMODUL Internal Use Only / 2011/6/20

Data Modul AG - www.data-modul.com

DATA MODUL
DISPLAY AND EMBEDDED SOLUTIONS

Data Modul Headquarters Munich
Landsberger-Str. 322
D-80687 Munich - Germany
Tel.: +49-89-56017-0

Sales Office Duesseldorf
Fritz-Vomfelde-Str. 8
D-40547 Duesseldorf - Germany
Tel.: +49-211-52709-0

Sales Office Hamburg
Borsteler Chaussee 51
D-22453 Hamburg - Germany
Tel.: +49-40-42947377 - 0

Data Modul France, S.A.R.L.
Bat B - Hall 204
1-3 Rue des Campanules
77185 Lognes - France
Tel.: +33-1-60378100

Data Modul Italia, S.r.l.
Regus Center Senigallia
Via Senigallia 18/2
20161 Milano - Italy
Tel.: +39-02-64672-509

Data Modul Iberia, S.L.
c/ Adolfo Pérez Esquivel 3
Edificio Las Americas III Oficiana 40
28230 Parque Empresarial
Madrid Las Rozas - Spain
Tel.: +34-916 366 458

Data Modul Ltd. / UK
Collons Building
3 Vigo Place - Aldridge - Walsall - WS9 8UG
United Kingdom
Tel.: +44-121-698-8641

Data Modul Inc. / USA
275 Marcus Blvd, Unit K
Hauppauge, NY 11788
USA
Tel.: (631)-951-0800

www.data-modul.com
display@data-modul.com