(V) Preliminary Specification
( ) Final Specification

Module	24.0" WUXGA Color TFT-LCD
Model Name	M240UW04 V1

FOR CUSTOMER INTERNAL USE ONLY
www.jxlcd.com

Customer	Date	Prepared by	Date
		Flossie Chuang	Oct. 5, 2007
Approved by		**Approved by**	
		CM Wung	Oct. 5, 2007
Note: This Specification is subject to change without notice.		Desktop Display Business Group / AU Optronics corporation	

Contents

1.0 Handling Precautions 4
2.0 General Description 5
2.1 Display Characteristics 5
2.2 Optical Characteristics 6
3.0 Functional Block Diagram 11
4.0 Absolute Maximum Ratings 12
4.1 TFT LCD Module 12
4.2 Backlight Unit 12
4.3 Absolute Ratings of Environment 12
5.0 Electrical characteristics 13
5.1 TFT LCD Module 13
5.1.1 Power Specification 13
5.1.2 Signal Electrical Characteristics 14
6.0 Signal Characteristic 16
6.1 Pixel Format Image 16
6.2 The input data format 16
6.3 Signal Description 17
6.4 Timing Characteristics 18
6.5 Timing diagram 20
6.6 Power ON/OFF Sequence 21
7.0 Connector & Pin Assignment 22
7.1 TFT LCD Module 22
7.1.1 Pin Assignment 22
7.2 Backlight Unit 23
7.2.1 Signal for Lamp connector 23
8.0 Reliability Test 24
9.0 Shipping Label 25
10.0 Mechanical Characteristics 26

FOR CUSTOMER INTERNAL USE ONLY
www.jxlcd.com

Record of Revision

Version and Date	Page	Old description	New Description	Remark
0.1 2007/08/16	All	First Edition for Customer	-	
0.2 2007/10/05	5	TBD for Color Coordinates (Redx/Redy/Greenx/Greeny/Bluex/ Bluey)	Add the Definition	Add
	5	Weight = 2725 typ. (grams)	Weight = 2635 typ. (grams)	Modify
	15	ViCFL@0°C=3350 [Volt]rms ViCFL@25 ^{O}C=2570 [Volt]rms	ViCFL@0°C=3000 [Volt]rms ViCFL@25 ^{O}C=2400 [Volt]rms	Modify

FOR CUSTOMER INTERNAL USE ONLY
www.jxlcd.com

1.0 Handling Precautions

1) Since front polarizer is easily damaged, pay attention not to scratch it.
2) Be sure to turn off power supply when inserting or disconnecting from input connector.
3) Wipe off water drop immediately. Long contact with water may cause discoloration or spots.
4) When the panel surface is soiled, wipe it with absorbent cotton or other soft cloth.
5) Since the panel is made of glass, it may break or crack if dropped or bumped on hard surface.
6) Since CMOS LSI is used in this module, take care of static electricity and insure human earth when handling.
7) Do not open or modify the Module Assembly.
8) Do not press the reflector sheet at the back of the module to any directions.
9) In case if a Module has to be put back into the packing container slot after once it was taken out from the container, do not press the center of the CCFL reflector edge. Instead, press at the far ends of the CCFL Reflector edge softly. Otherwise the TFT Module may be damaged.
10) At the insertion or removal of the Signal Interface Connector, be sure not to rotate nor tilt the Interface Connector of the TFT Module.
11) After installation of the TFT Module into an enclosure, do not twist nor bend the TFT Module even momentary. At designing the enclosure, it should be taken into consideration that no bending/twisting forces are applied to the TFT Module from outside. Otherwise the TFT Module may be damaged.
12) Cold cathode fluorescent lamp in LCD contains a small amount of mercury. Please follow local ordinances or regulations for disposal.
13) Small amount of materials having no flammability grade is used in the LCD module. The LCD module should be supplied by power complied with requirements of Limited Power Source (IEC60950 or UL1950), or be applied exemption.
14) The LCD module is designed so that the CCFL in it is supplied by Limited Current Circuit (IEC60950 or UL1950). Do not connect the CCFL in Hazardous Voltage Circuit.

FOR INTERNAL USE ONLY
www.jxlcd.com

2.0 General Description

This specification applies to the 24 inch-wide Color a-Si TFT-LCD Module M240UW04.

The display supports the WUXGA (1920(H) x 1200(V)) screen format and 16.7M colors (RGB 6-bits + Hi-FRC data).

All input signals are 2 channel LVDS interface compatible.

This module doesn't contain an inverter board for backlight.

2.1 Display Characteristics

The following items are characteristics summary on the table under 25 ℃ condition:

ITEMS	Unit	SPECIFICATIONS
Screen Diagonal	[mm]	611.32(24")
Active Area	[mm]	518.4 (H) x 324 (V)
Pixels H x V		1920(x3) x 1200
Pixel Pitch	[mm]	0.270 (per one triad) x 0.270
Pixel Arrangement		R.G.B. Vertical Stripe
Display Mode		TN Mode, Normally White
White Luminance (Center)	[cd/m^2]	450 cd/m^2 @ I_L=6mA (Typ.)
Contrast Ratio		1000 (Typ.)
Optical Response Time	[msec]	5ms (Typ., on/off); 9ms (Typ., SPD on)
Nominal Input Voltage VDD	[Volt]	+5.0 V
Power Consumption (VDD line + CCFL line)	[Watt]	74 W (Typ.) SPD off /80W (Typ) SPD on without inverter
Weight	[Grams]	2635 (Typ.)
Physical Size	[mm]	546.4(W) x 352(H) x 35.8(D) (Typ.)
Electrical Interface		Even/Odd R/G/B data, clock LVDS
Support Color		16.7M colors (RGB 6-bit + Hi_FRC)
Surface Treatment		Anti-Glare, 3H
Temperature Range Operating Storage (Shipping)	 [°C] [°C]	 0 to +50 -20 to +60
RoHS Compliance		RoHS Compliance

FOR CUSTOMER INTERNAL USE ONLY
www.jxlcd.com

2.2 Optical Characteristics

The optical characteristics are measured under stable conditions at 25℃: Except MPRT, all data are measured with SPD OFF.

Item	Unit	Conditions	Min.	Typ.	Max.	Note
Viewing Angle	[degree] [degree]	Horizontal (Right) CR = 10 (Left)	160	170	- -	***Note 2***
	[degree] [degree]	Vertical (Up) CR = 10 (Down)	150	160	- -	
Contrast ratio		Normal Direction	600	1000	-	
Response Time	[msec]	Raising Time	-	3.4	5.7	***Note 1***
	[msec]	Falling Time	-	1.6	2.3	
	[msec]	Raising + Falling	-	5	8	
	[msec]	MPRT	-	9	15	***Note 6 (SPD on)***
Color / Chromaticity Coordinates (CIE)		Red x	0.626	0.656	0.686	
		Red y	0.300	0.330	0.360	
		Green x	0.180	0.210	0.240	
		Green y	0.645	0.675	0.705	
		Blue x	0.117	0.147	0.177	
		Blue y	0.040	0.070	0.100	
Color Coordinates (CIE) White		White x	0.283	0.313	0.343	
		White y	0.299	0.329	0.359	
Central Luminance (I_L=6mA)	[cd/m^2]		350	450	-	
Luminance Uniformity	[%]		75	80	-	***Note 3***
Crosstalk (At 60Hz)	[%]				1.5	***Note 4***
Flicker	dB				-20	***Note 5***

FOR INTERNAL USE ONLY
www.jxlcd.com

Equipment Pattern Generator, Power Supply, Digital Voltmeter, Luminance meter (PR 880, BM-5A, BM 7 ,CS-1000, & EZContrast*)

Aperture 1° with 100cm VD or 2° with 50cm viewing distance
Test Point Center (VESA point 9)
Environment < 1 lux

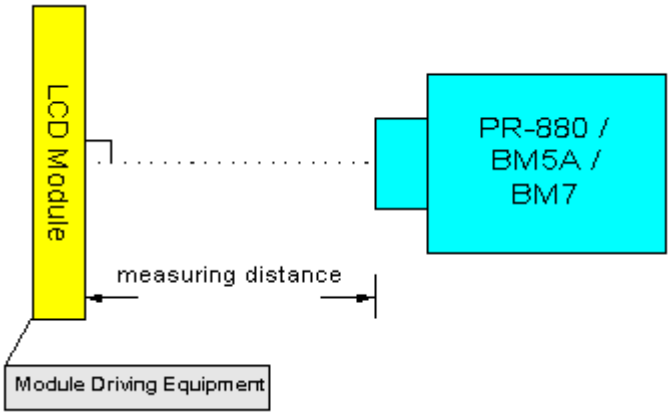

*' EZ Contrast is different measurement tool with very close viewing distance.

FOR EQ INTERNAL USE ONLY

Note 1: **Definition of Response time**

The output signals of photodetector are measured when the input signals are changed from "Black" to "White" (rising time), and from "White" to "Black "(falling time), respectively. The response time is interval between the 10% and 90% of amplitudes.

www.jxlcd.com

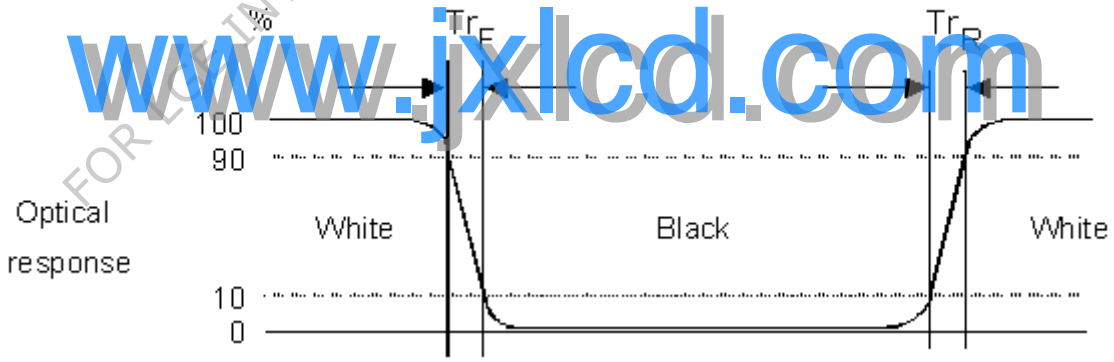

Note 2: **Definition of viewing angle*:*** measured by ELDIM (EZContrast 88)
Viewing angle is the measurement of contrast ratio □10, at the screen center, over a 180° horizontal and 180° vertical range (off-normal viewing angles). The 180° viewing angle range is broken down as follows; 90° (θ) horizontal left and right and 90° (Φ) vertical, high (up) and low (down). The measurement direction is typically perpendicular to the display surface with the screen rotated about its center to develop the desired measurement viewing angle.

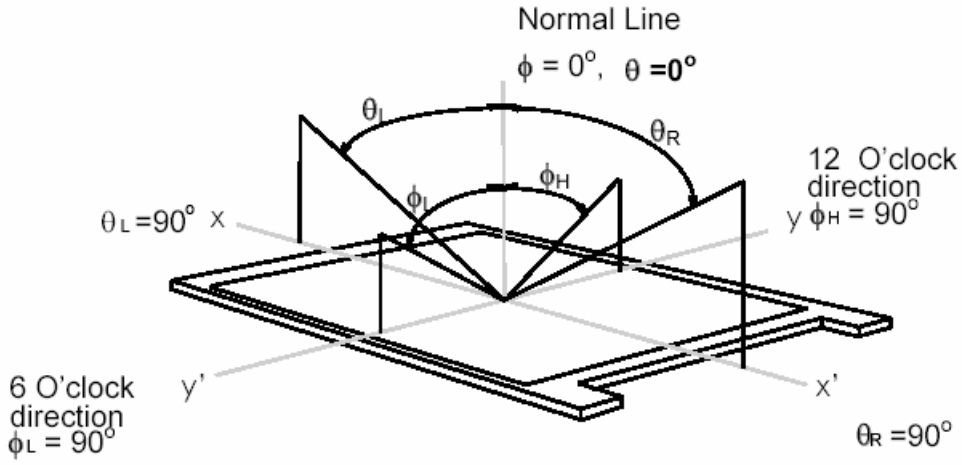

FOR CUSTOMER INTERNAL USE ONLY
www.jxlcd.com

Note 3: **Luminance uniformity of these 9 points is defined as below**

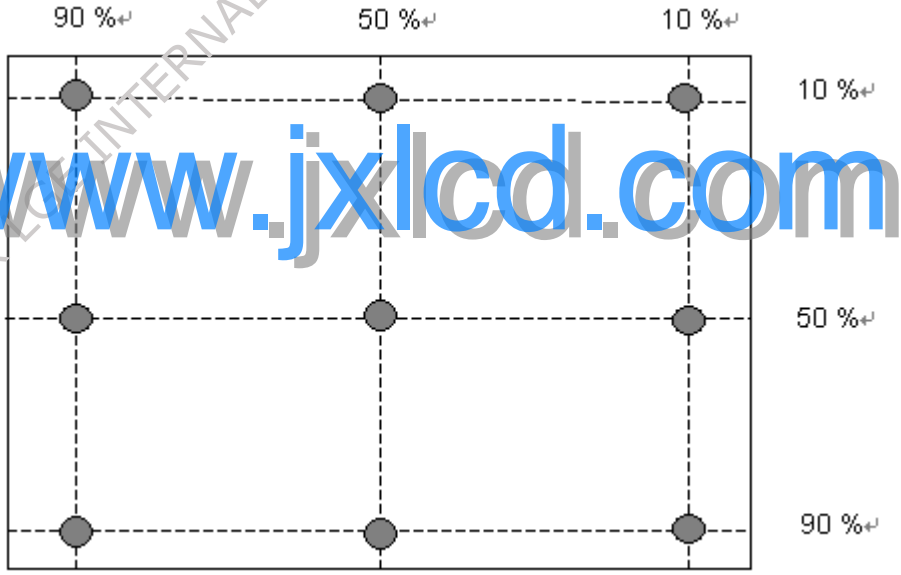

$$\text{Uniformity} = \frac{\text{Minimum Luminance in 9 points (1 - 9)}}{\text{Maximum Luminance in 9 Points (1 - 9)}}$$

Note 4: **Crosstalk is defined as below :**

$$CT = | YB - YA | / YA \times 100\ (\%)$$

Where

YA = Luminance of measured location without gray level 0 pattern (cd/m2)

YB = Luminance of measured location with gray level 0 pattern (cd/m2)

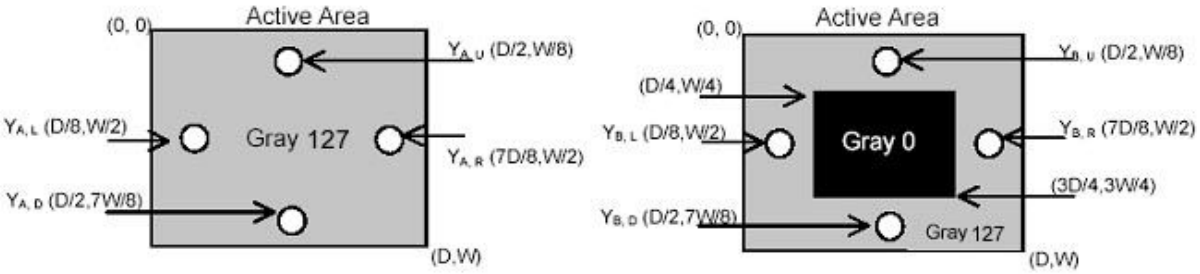

Note 5: **Test Paterm: Subchecker Pattern**

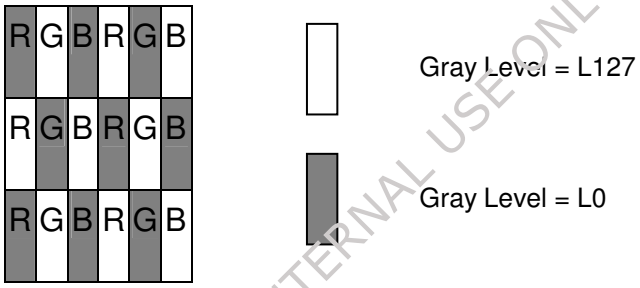

FOR CUSTOMER INTERNAL USE ONLY
www.jxlcd.com

Method: Record CAV & DC value with (WESTAR)TRD-100

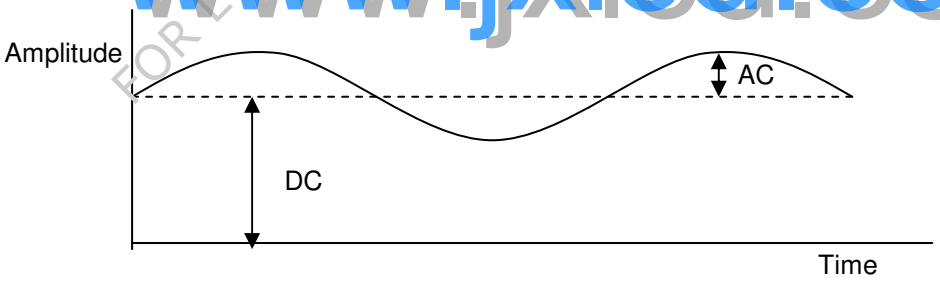

$$\text{Flicker (dB)} = 20\log\frac{\text{AC Level(at 30 Hz)}}{\text{DC Level}}$$

Note 6: **SPD Measurement is defined as below:** measured by Otsuka MPRT-1000

MPRT(Moving Picture Response Time) is the average value of BET measured from 72 combinations of different gray levels.
We divide the measurement base on each 32 grey level. Because the brightness between L0 & L32 is so slight and it will cause noise to influence the outcome, we set L42 instead of L32. We can get 72 combination data as the table below.

Background (End Gray) \ Start Gray	L0	L42	L64	L96	L128	L160	L192	L224	L255
L0		BET9	BET17	BET25	BET33	BET41	BET49	BET57	BET65
L42	BET1		BET18	BET26	BET34	BET42	BET50	BET58	BET66
L64	BET2	BET10		BET27	BET35	BET43	BET51	BET59	BET67
L96	BET3	BET11	BET19		BET36	BET44	BET52	BET60	BET68
L128	BET4	BET12	BET20	BET28		BET45	BET53	BET61	BET69
L160	BET5	BET13	BET21	BET29	BET37		BET54	BET62	BET70
L192	BET6	BET14	BET22	BET30	BET38	BET46		BET63	BET71
L224	BET7	BET15	BET23	BET31	BET39	BET47	BET55		BET72
L255	BET8	BET16	BET24	BET32	BET40	BET48	BET56	BET64	

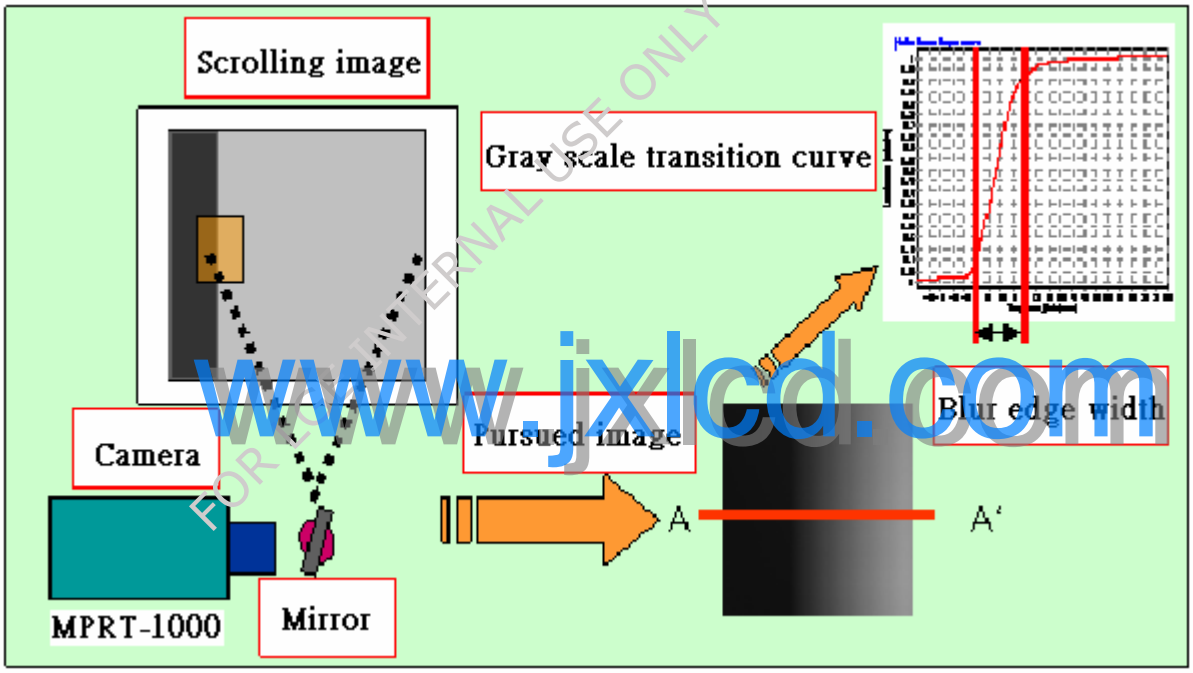

FOR CUSTOMER INTERNAL USE ONLY
www.jxlcd.com

$$\text{MPRT (seconds)} = \frac{\text{BET}_1 + \text{BET}_2 + \ldots + \text{BET}_{72}}{72}$$

$$\text{BET} = \text{BEW} \times \frac{1}{\text{scrolling speed} \times \text{frame rate}}$$

BEW: Blur Edge Width (LCD pixel). The width is defined to be used for the values 10%~90% of luminance.
Note: scrolling speed=8ppf (LCD pixel/frame rate) ; frame rate=60Hz

3.0 Functional Block Diagram

The following diagram shows the functional block of the 24.0 inch Color TFT-LCD Module:

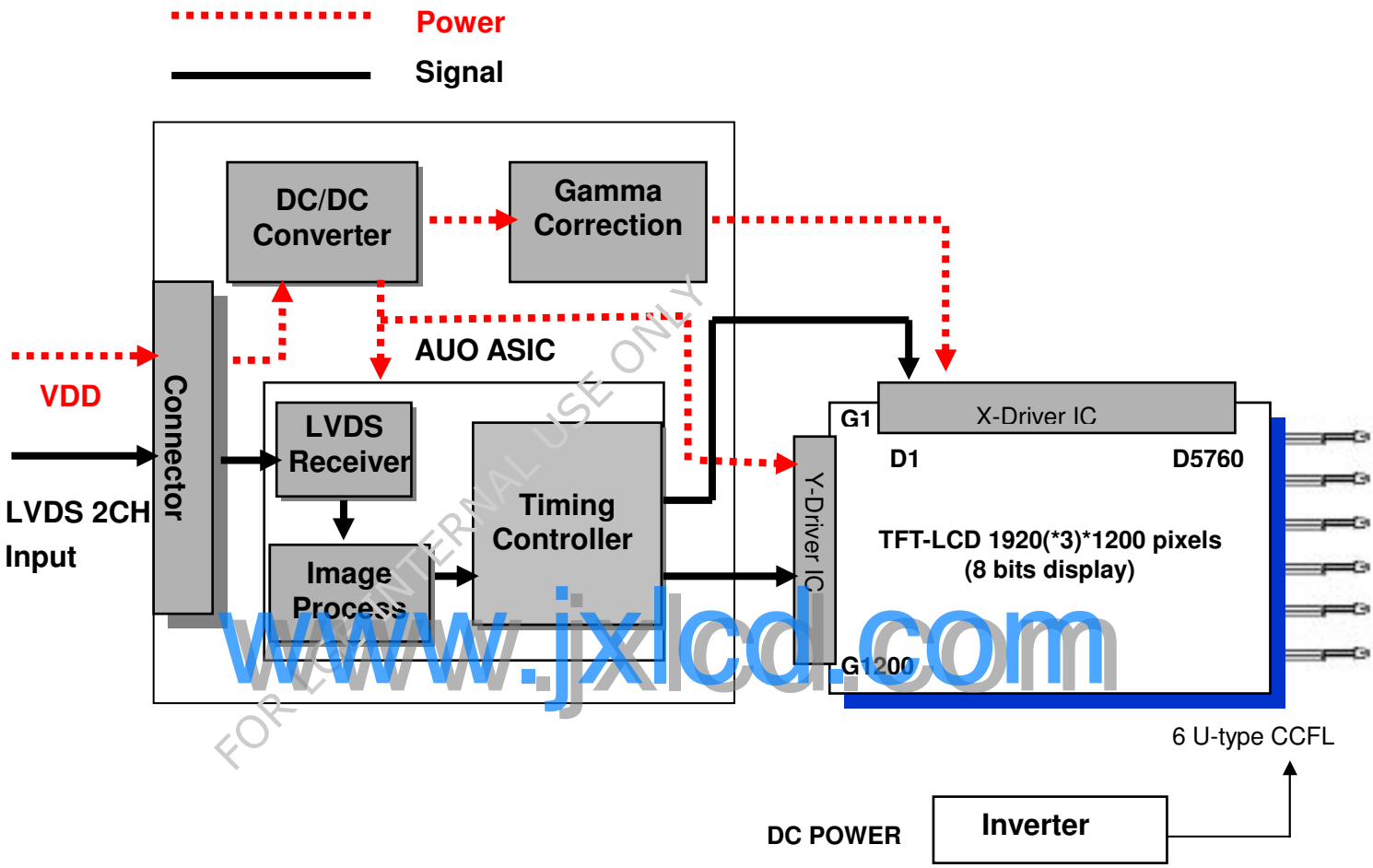

FOR EXTERNAL USE ONLY
www.jxlcd.com

I/F PCB Interface:

JAE FI-XB30SSL-HF15 or compatible

Mating Type:

FI-X30HL-T (Locked Type)

FI-X30S-H (Unlocked Type)

4.0 Absolute Maximum Ratings

Absolute maximum ratings of the module is as following:

4.1 TFT LCD Module

Item	Symbol	Min	Max	Unit	Conditions
Logic/LCD Drive Voltage	VDD	4.5	5.5	[Volt]	***Note 1,2***

4.2 Backlight Unit

Item	Symbol	Min	Max	Unit	Conditions
CCFL Current	ICFL	2.0	8.0	[mA] rms	***Note 1,2***

4.3 Absolute Ratings of Environment

Item	Symbol	Min.	Max.	Unit	Conditions
Operating Temperature	TOP	0	+50	[°C]	Note 3
Operation Humidity	HOP	5	90	[%RH]	
Storage Temperature	TST	-20	+60	[°C]	
Storage Humidity	HST	5	90	[%RH]	

FOR CUSTOMER'S INTERNAL USE ONLY
www.jxlcd.com

Note 1: Within Ta (25°C)

Note 2: Permanent damage to the device may occur if exceed maximum values

Note 3: For quality perfermance, please refer to AUO IIS(Incoming Inspection Standard).

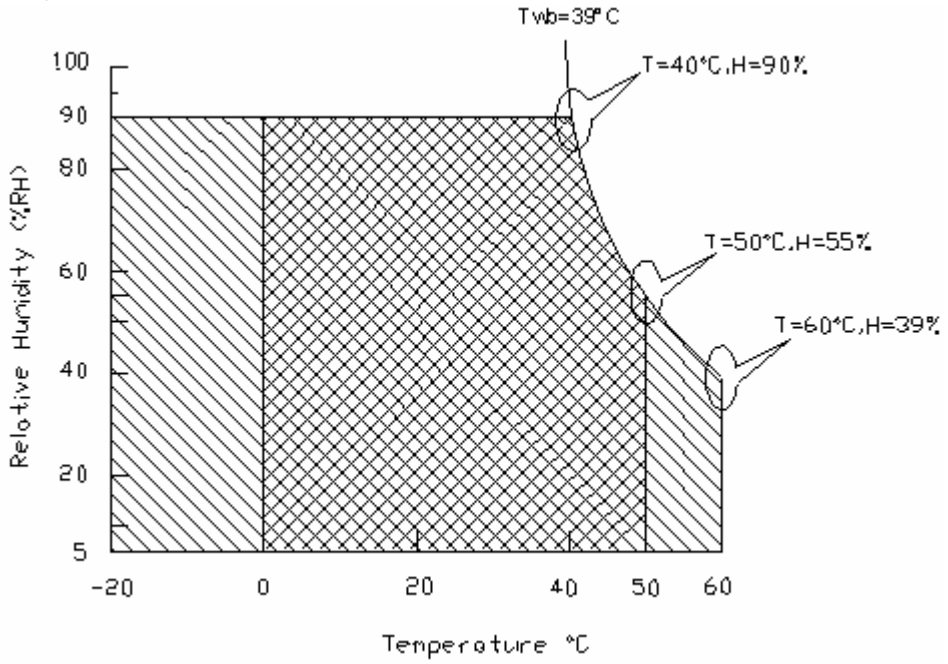

Operating Range Storage Range

5.0 Electrical characteristics

5.1 TFT LCD Module

5.1.1 Power Specification

Input power specifications are as follows;

Symbol	Parameter	Min	Typ	Max	Units	Condition
VDD	Logic/LCD Drive Voltage	4.5	5.0	5.5	[Volt]	±10%
IDD	VDD current	-	1.2	1.5	[A]	VDD=5V , All Black Pattern, at frame rate 60Hz, SPD off
		-	1.6	2.0	[A]	VDD=5V , All Black Pattern, at frame rate 60Hz, SPD on
Irush	LCD Inrush Current	-	-	3	[A]	***Note***
PDD	VDD Power	-	6	7.2	[Watt]	VDD=5V , All Black Pattern, at 60Hz, SPD off, ±20%
		-	8	9.6	[Watt]	VDD=5V , All Black Pattern, at 60Hz, SPD on, ±20%

FOR CUSTOMER INTERNAL USE ONLY
www.jxlcd.com

Note: Measurement conditions:

The duration of rising time of power input is 470us.

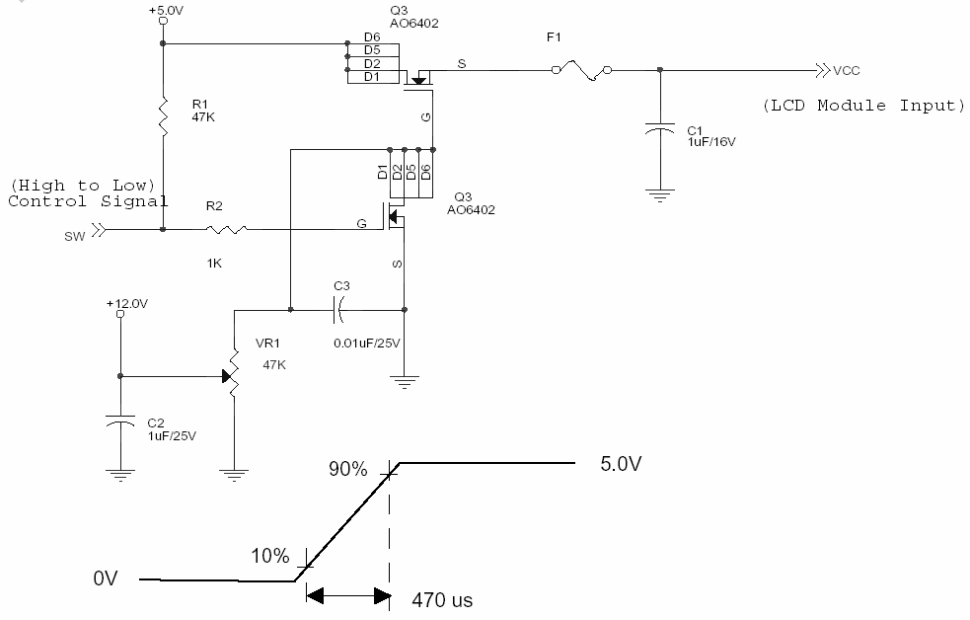

Vin rising time

5.1.2 Signal Electrical Characteristics

Input signals shall be low or Hi-Z state when Vin is off
It is recommended to refer the specifications of SN75LVDS82DGG (Texas Instruments) in detail.

Each signal characteristics are as follows;

Symbol	Parameter	Min	Typ	Max	Units	Condition
VTH	Differential Input High Threshold	-	+50	+100	[mV]	VICM = 1.2V ***Note***
VTL	Differential Input Low Threshold	-100	-50	-	[mV]	VICM = 1.2V ***Note***
| VID |	Input Differential Voltage	100	-	600	[mV]	***Note***
VICM	Differential Input Common Mode Voltage	+1.0	+1.2	+1.5	[V]	VTH-VTL = 200MV ***Note***

Note: LVDS Signal Waveform

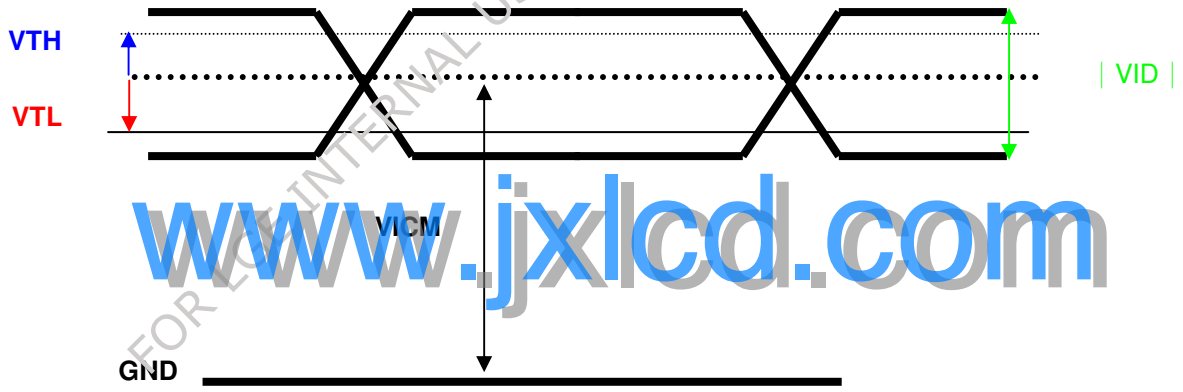

FOR CUSTOMER INTERNAL USE ONLY
www.jxlcd.com

5.2 Backlight Unit

Parameter guideline for CCFL Inverter is under stable conditions at 25□ (Room Temperature):

Parameter	Min.□	Typ.	Max.□	Unit	Condition
CCFL Operation Current(ICFL)	2.0	6.0	8.0	[mA] rms	Note 2
CCFL Frequency(FCFL)	40	53	57	[KHz]	Note 3,4
CCFL Ignition Voltage(ViCFL, Ta= 0□)	3000	-	-	[Volt] rms	Note 5
CCFL Ignition Voltage(ViCFL, Ta= 25□)	2400	-	-	[Volt] rms	
CCFL Operation Voltage (VCFL)	-	1916 (@ 6mA)	-	[Volt] rms	Note 6
CCFL Power Consumption(PCFL)		69	-	[Watt]	Note 6
CCFL Life Time(LTCFL)	40,000	50,000	-	[Hour]	Note 7

FOR AUO INTERNAL USE ONLY
www.jxlcd.com

Note 1: Typ. are AUO recommended design points.

*1 All of characteristics listed are measured under the condition using the AUO test inverter.

*2 In case of using an inverter other than listed, it is recommended to check the inverter carefully. Sometimes, interfering noise stripes appear on the screen, and substandard luminance or flicker at low power may happen.

*3 In designing an inverter, it is suggested to check safety circuit very carefully. Impedance of CCFL, for instance, becomes more than 1 [M ohm] when CCFL is damaged.

*4 Generally, CCFL has some amount of delay time after applying kick-off voltage. It is recommended to keep on applying kick-off voltage for 1 [Sec] until discharge.

*5 Reducing CCFL current increases CCFL discharge voltage and generally increases CCFL discharge frequency. So all the parameters of an inverter should be carefully designed so as not to produce too much leakage current from high-voltage output of the inverter.

Note 2: CCFL standard current is measured at 25±2℃.

Note 3: CCFL discharge frequency should be carefully determined to avoid interference between inverter and TFT LCD.

Note 4: The frequency range will not affect to lamp life and reliability characteristics.

Note 5: CCFL inverter should be able to give out a power that has a generating capacity of over 2570 voltage. Lamp units need 2570 voltage minimum for ignition.

Note 6: The variance of CCFL power consumption is ±10%. Calculator value for reference (IRCFL × VCFL × 6 = PCFL)

Note 7: Definition of life time: brightness becomes 50%. The minimum life time of CCFL unit is on the condition of 6mA CCFL current and 25±2℃.

6.0 Signal Characteristic

6.1 Pixel Format Image

Following figure shows the relationship of the input signals and LCD pixel format.

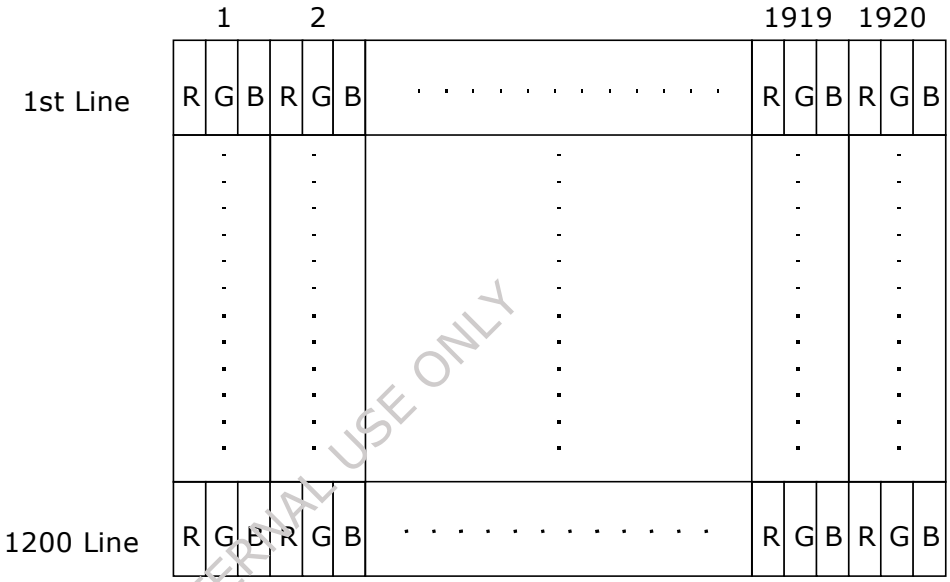

FOR EXTERNAL USE ONLY
www.jxlcd.com

6.2 The input data format

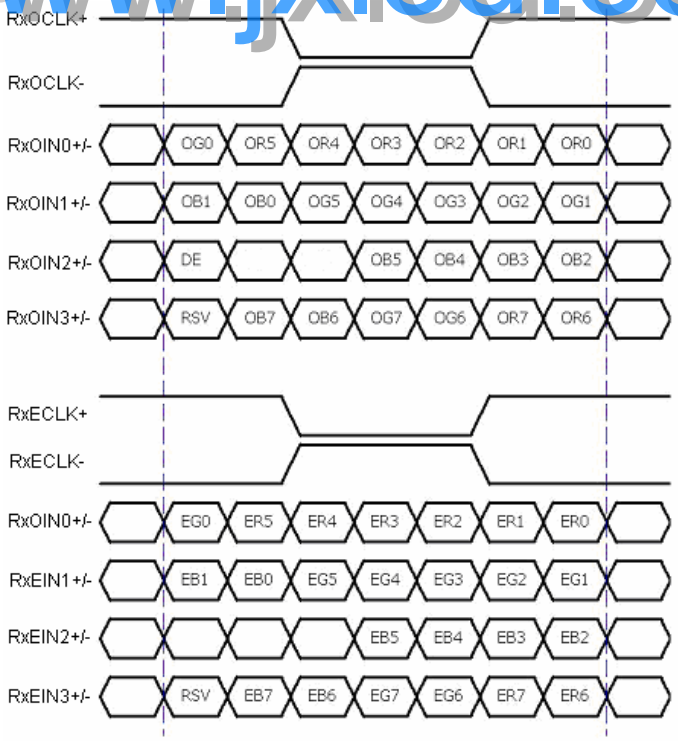

Note 1: R/G/B data 7:MSB, R/G/B data 0:LSB
O = “First Pixel Data”
E = “Second Pixel Data”

6.3 Signal Description

The module using one LVDS receiver SN75LVDS82(Texas Instruments) or compatible. LVDS is a differential signal technology for LCD interface and high speed data transfer device. Transmitter shall be SN75LVDS83(negative edge sampling) or compatible**.** The first LVDS port(RxOxxx) transmits odd pixels while the second LVDS port(RxExxx) transmits even pixels.

PIN #	SIGNAL NAME	DESCRIPTION
1	RxOIN0-	Negative LVDS differential data input (Odd data)
2	RxOIN0+	Positive LVDS differential data input (Odd data)
3	RxOIN1-	Negative LVDS differential data input (Odd data)
4	RxOIN1+	Positive LVDS differential data input (Odd data)
5	RxOIN2-	Negative LVDS differential data input (Odd data, DSPTMG)
6	RxOIN2+	Positive LVDS differential data input (Odd data, DSPTMG)
7	GND	Power Ground
8	RxOCLK-	Negative LVDS differential clock input (Odd clock)
9	RxOCLK+	Positive LVDS differential clock input (Odd clock)
10	RxOIN3-	Negative LVDS differential data input (Odd data)
11	RxOIN3+	Positive LVDS differential data input (Odd data)
12	RxEIN0-	Negative LVDS differential data input (Even data)
13	RxEIN0+	Positive LVDS differential data input (Even data)
14	GND	Power Ground
15	RxEIN1-	Positive LVDS differential data input (Even data)
16	RxEIN1+	Negative LVDS differential data input (Even data)
17	GND	Power Ground
18	RxEIN2-	Negative LVDS differential data input (Even data)
19	RxEIN2+	Positive LVDS differential data input (Even data)
20	RxECLK-	Negative LVDS differential clock input (Even clock)
21	RxECLK+	Positive LVDS differential clock input (Even clock)
22	RxEIN3-	Negative LVDS differential data input (Even data)
23	RxEIN3+	Positive LVDS differential data input (Even data)
24	GND	Power Ground
25	AGMODE	0V: enable ; +5V or Floating: disable
26	SPDEN	0V: enable ; +5V or Floating: disable
27	VDD	Power +5V
28	VDD	Power +5V
29	VDD	Power +5V
30	VDD	Power +5V

FOR CUSTOMER INTERNAL USE ONLY
www.jxlcd.com

Note1: Start from left side

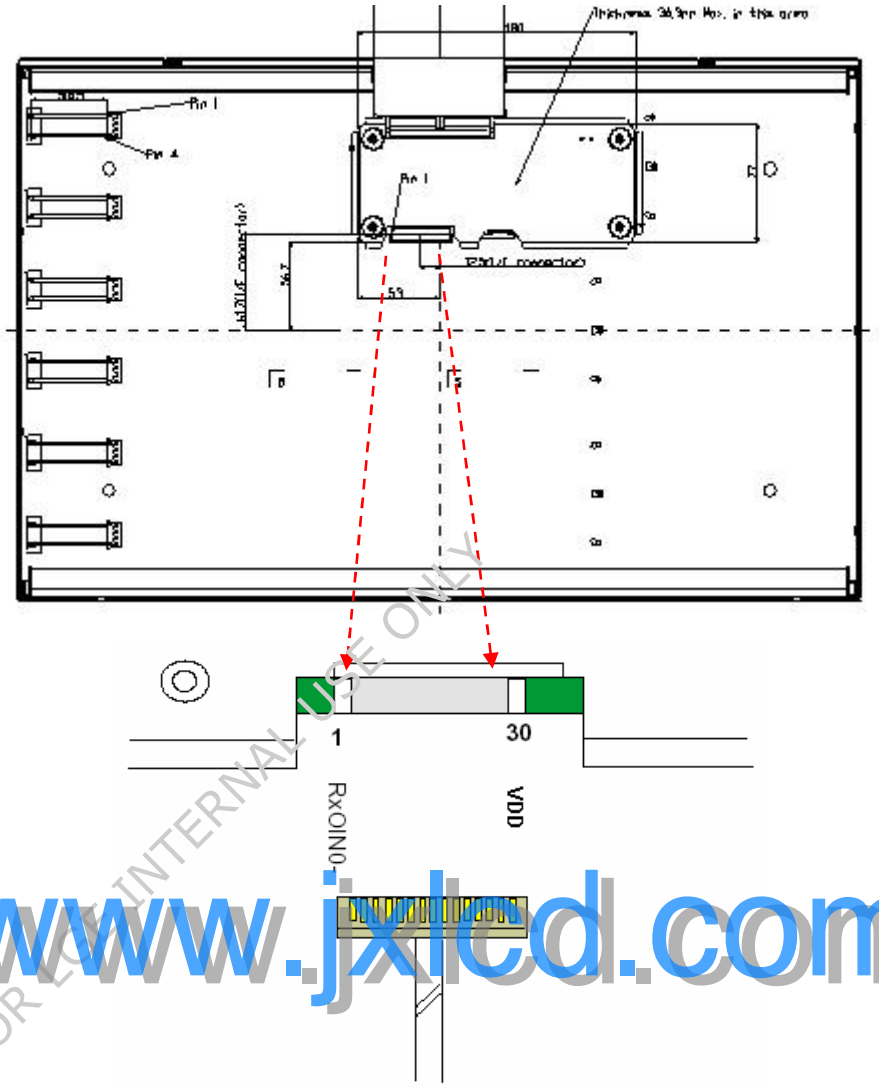

FOR CUSTOMER INTERNAL USE ONLY
www.jxlcd.com

Note2: Input signals of odd and even clock shall be the same timing.

6.4 Timing Characteristics

Basically, interface timings described here is not actual input timing of LCD module but output timing of SN75LVDS82DGG (Texas Instruments) or equivalent.

Note: Typical value refer to VESA STANDARD

SPD OFF						
Signal	Item	Symbol	Min	Typ	Max	Unit
Vertical Section	Period	Tv	1208	1250	2048	Th
	Active	Tdisp(v)	1200	1200	1200	Th
	Blanking	Tblk(v)	8	50	-	Th
Horizontal Section	Period	Th	1000	1050	2048	Tclk
	Active	Tdisp(h)	960	960	960	Tclk
	Blanking	Tblk(h)	40	90	-	Tclk
Clock	Period	Tclk	11.76	-	-	ns
	Frequency	Freq	-	77.95	85	MHz
Frame Rate	Frequency	Vsync	47	60	65	Hz

SPD ON						
Signal	Item	Symbol	Min	Typ	Max	Unit
Vertical Section	Period	Tv	1212	1212	2048	Th
	Active	Tdisp(v)	1200	1200	1200	Th
	Blanking	Tblk(v)	12	12	-	Th
Horizontal Section	Period	Th	1072	1072	2048	Tclk
	Active	Tdisp(h)	960	960	960	Tclk
	Blanking	Tblk(h)	112	112	-	Tclk
Clock	Period	Tclk	11.76	-	-	ns
	Frequency	Freq	-	77.95	85	MHz
Frame Rate	Frequency	Vsync	60	60	65	Hz

FOR CUSTOMER INTERNAL USE ONLY
www.jxlcd.com

Note : DE mode only

6.5 Timing diagram

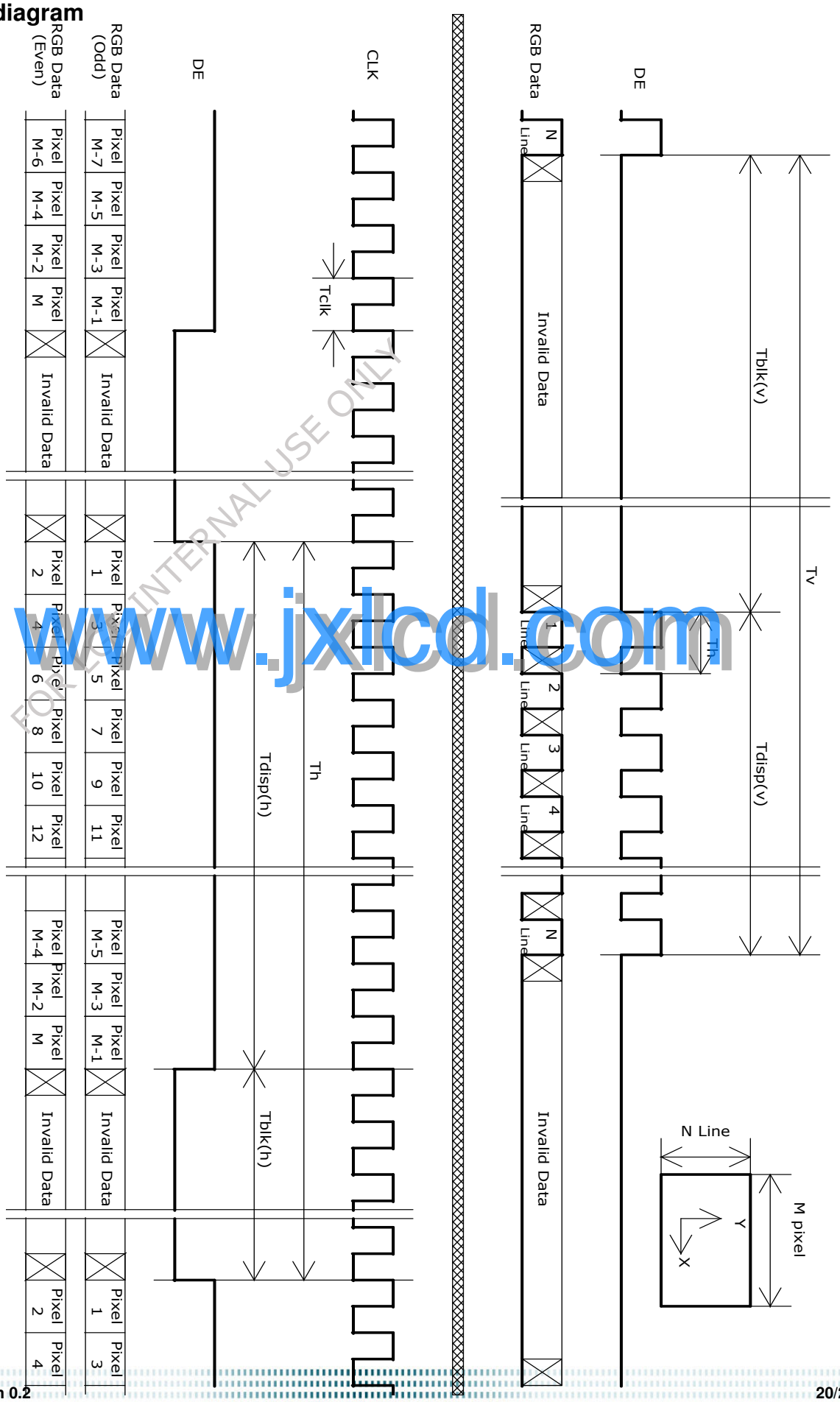

FOR CUSTOMER INTERNAL USE ONLY
www.jxlcd.com

6.6 Power ON/OFF Sequence

Vin power and lamp on/off sequence is as follows. Interface signals are also shown in the chart. Signals from any system shall be Hi-Z state or low level when Vin is off.

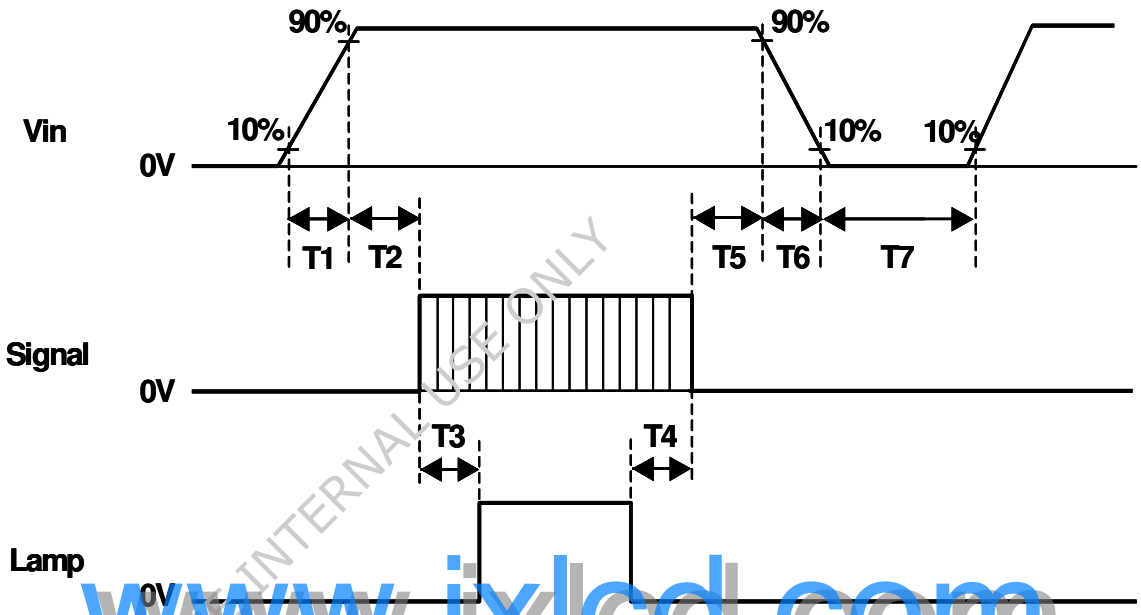

FOR CUSTOMER INTERNAL USE ONLY
www.jxlcd.com

Symbol	Values			Unit
	Min	Typ	Max	
T1	0.5	-	10	[ms]
T2	0.5	40	50	[ms]
T3	300	-	-	[ms]
T4	300	-	-	[ms]
T5	0.5	16	50	[ms]
T6	0.5	-	60	[ms]
T7	1000	-	-	[ms]

7.0 Connector & Pin Assignment

Physical interface is described as for the connector on module.
These connectors are capable of accommodating the following signals and will be following components.

7.1 TFT LCD Module

Connector Name / Designation	Interface Connector / Interface card
Manufacturer	JAE or compatible
Type Part Number	FI-XB30SSL-HF15
Mating Housing Part Number	FI-X30HL-T (Locked Type)
	FI-X30S-H (Unlocked Type)

7.1.1 Pin Assignment

Pin#	Signal Name	Pin#	Signal Name
1	RxOIN0-	2	RxOIN0+
3	RxOIN1-	4	RxOIN1+
5	RxOIN2-	6	RxOIN2+
7	GND	8	RxOCLK-
9	RxOCLK+	10	RxOIN3-
11	RxOIN3+	12	RxEIN0-
13	RxEIN0+	14	GND
15	RxEIN1-	16	RxEIN1+
17	GND	18	RxEIN2-
19	RxEIN2+	20	RxECLK-
21	RxECLK+	22	RxEIN3-
23	RxEIN3+	24	GND
25	AGMODE	26	SPDEN
27	VDD	28	VDD
29	VDD	30	VDD

FOR INTERNAL USE ONLY
www.jxlcd.com

7.2 Backlight Unit

Physical interface is described as for the connector on module. These connectors are capable of accommodating the following signals and will be following components.

Connector Name / Designation	Lamp Connector / Backlight lamp
Manufacturer	CVILUX or compatible
Type Part Number	CP0404SLN00
Mating Type Part Number	CP042AP1ML0

FOR AU INTERNAL USE ONLY

7.2.1 Signal for Lamp connector

Connector	Pin No.	Input	Color	Function
CN1	1	Hot	Pink	High Voltage
	4	Hot	White	High Voltage
CN2	1	Hot	Pink	High Voltage
	4	Hot	White	High Voltage
CN3	1	Hot	Pink	High Voltage
	4	Hot	White	High Voltage
CN4	1	Hot	Pink	High Voltage
	4	Hot	White	High Voltage
CN5	1	Hot	Pink	High Voltage
	4	Hot	White	High Voltage
CN6	1	Hot	Pink	High Voltage
	4	Hot	White	High Voltage

www.jxlcd.com

8.0 Reliability Test

Environment test conditions are listed as following table.

Items	Required Condition	Note
Temperature Humidity Bias (THB)	Ta= 50□, 80%RH, 300hours	
High Temperature Operation (HTO)	Ta= 50□, 50%RH, 300hours	
Low Temperature Operation (LTO)	Ta= 0□, 300hours	
High Temperature Storage (HTS)	Ta= 60□, 300hours	
Low Temperature Storage (LTS)	Ta= -20□, 300hours	
Vibration Test (Non-operation)	Acceleration: 1.5 G Wave: Half-sine Frequency: 10 - 300 - 10 Hz Sweep: 30 Minutes each Axis (X, Y, Z)	
Shock Test (Non-operation)	Acceleration: 50 G Wave: Half-sine Active Time: 11 ms Direction: ±X, ±Y, ±Z (one time for each Axis)	
Drop Test	Height: 60 cm, package test	
Thermal Shock Test (TST)	-20□/30min, 60□/30min, 100 cycles	1
On/Off Test	On/10sec, Off/10sec, 30,000 cycles	
ESD (ElectroStatic Discharge)	Contact Discharge: ± 8KV, 150pF(330Ω) 1sec, 8 points, 25 times/ point.	2
	Air Discharge: ± 15KV, 150pF(330Ω) 1sec 8 points, 25 times/ point.	
Altitude Test	Operation:10,000 ft Non-Operation:30,000 ft	

FOR CUSTOMER INTERNAL USE ONLY
www.jxlcd.com

Note 1: The TFT-LCD module will not sustain damage after being subjected to 100 cycles of rapid temperature change. A cycle of rapid temperature change consists of varying the temperature from -20℃ to 60℃, and back again. Power is not applied during the test. After temperature cycling, the unit is placed in normal room ambient for at least 4 hours before power on.

Note 2: According to EN61000-4-2 , ESD class B: Some performance degradation allowed. No data lost. Self-recoverable. No hardware failures.

9.0 Shipping Label

The label is on the panel as shown below:

FOR CUSTOMER INTERNAL USE ONLY
www.jxlcd.com

10.0 Mechanical Characteristics

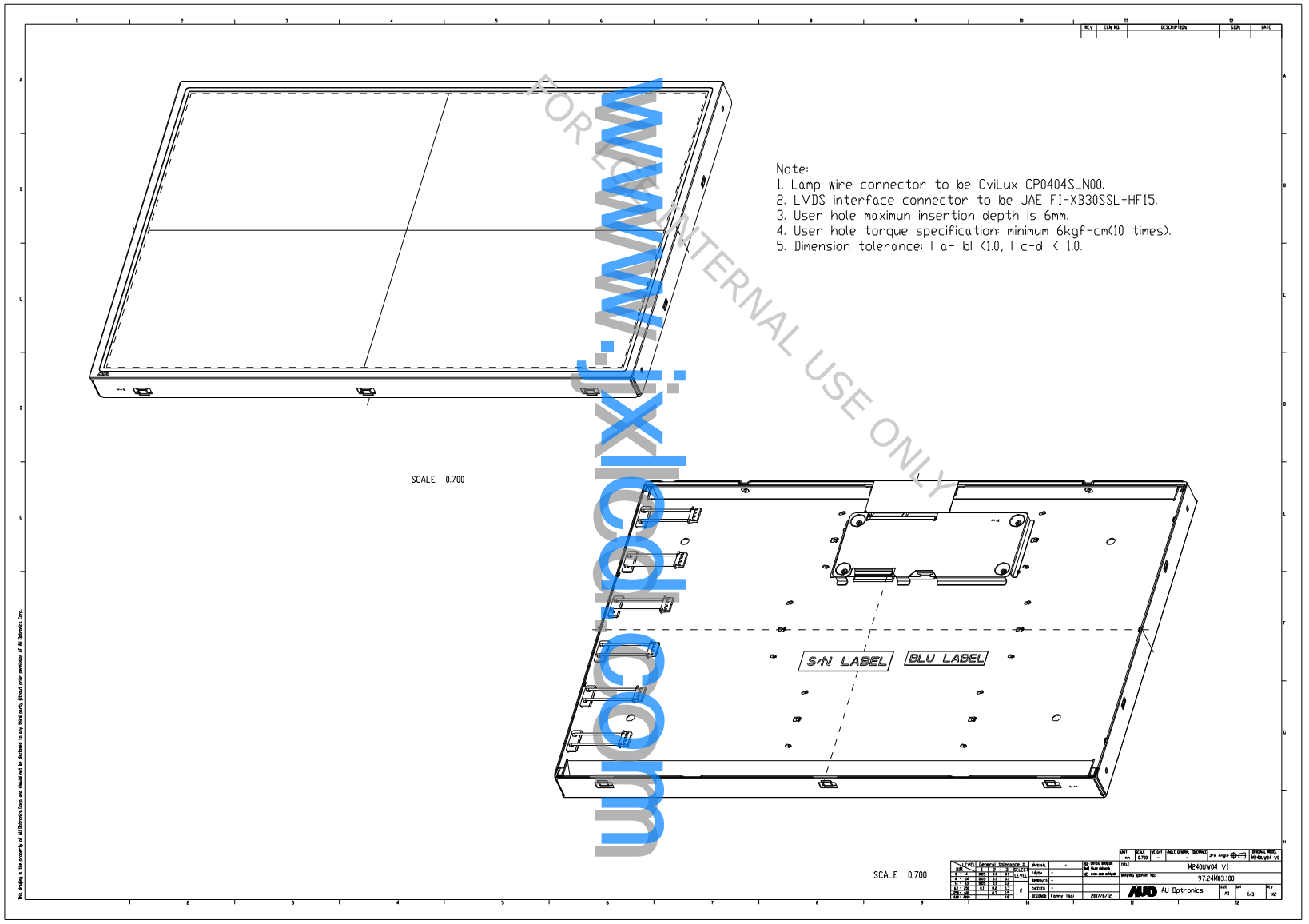

FOR CUSTOMER INTERNAL USE ONLY
www.xiaofa.com

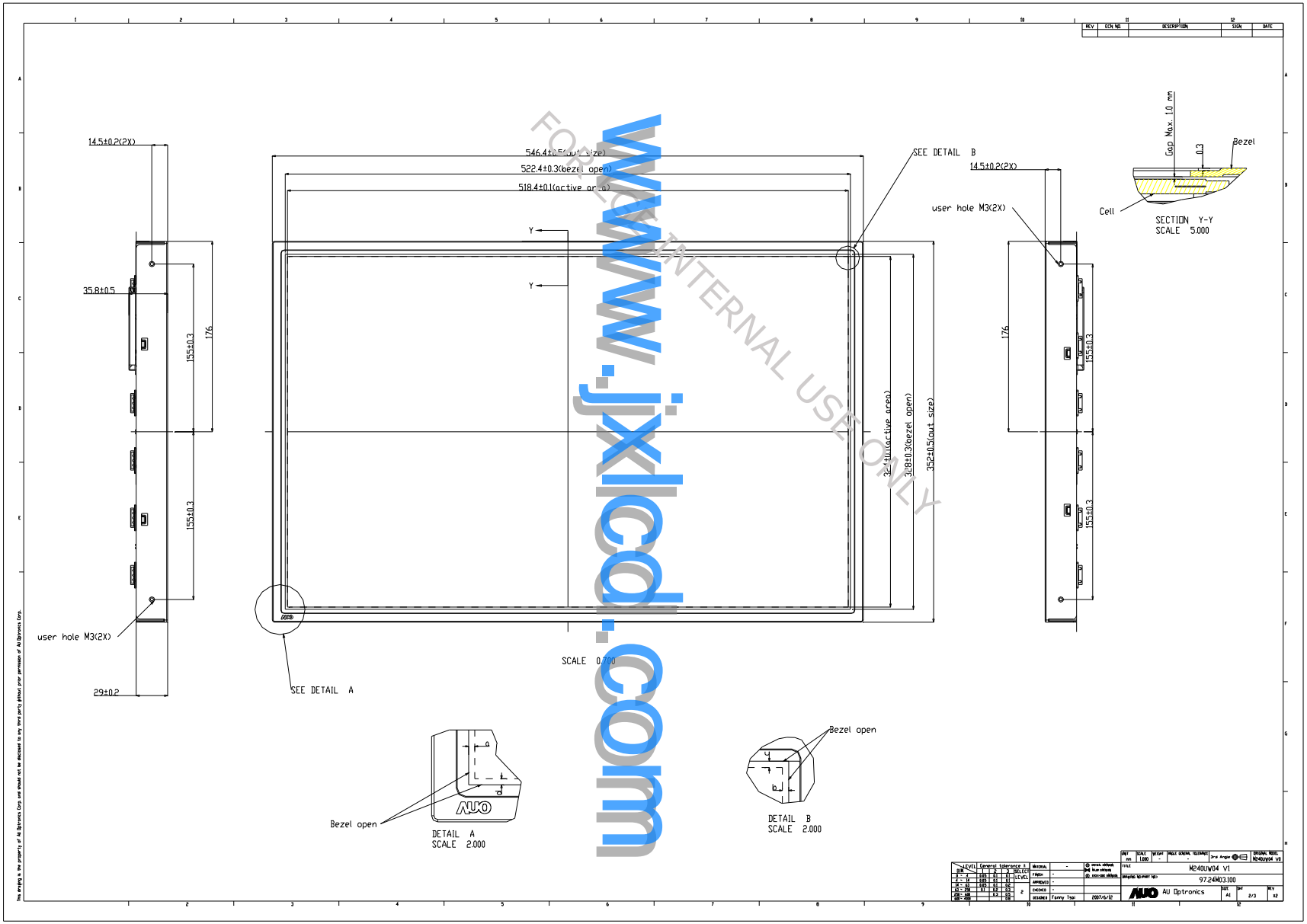

www.ixlcd.com
FOR CLIENT INTERNAL USE ONLY

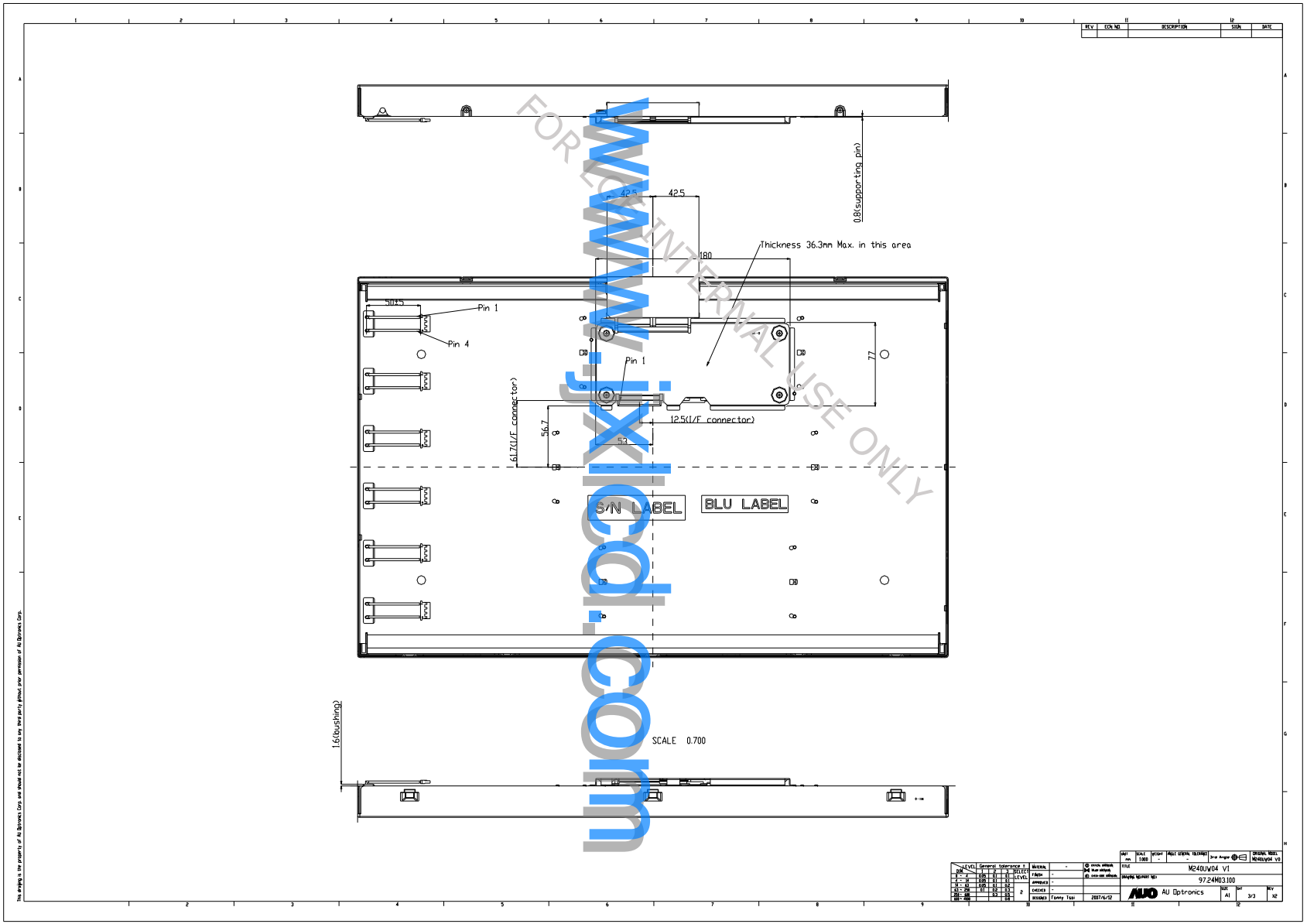

FOR COMPANY INTERNAL USE ONLY
www.jxlcd.com