AU Optronics Corp.

Product Specifications

46.0” WXGA Color TFT-LCD Module
Model Name: T460HW01
V.0

(*) Preliminary Specifications
( ) Final Specifications

Note: This Specification is subject to change without

AU Optronics Corp.

Contents

Record of Revision

Version	Date	No	Description	Remark
0.1	Sep. 26,'03		First Draft (Preliminary)	

1. General Description

This specification applies to the 46.0 inch Color TFT-LCD Module T460HW01. This LCD module has a TFT active matrix type liquid crystal panel 1920x1080 pixels, and diagonal size of 46.0 inch. This module supports 1920x1080 HDTV mode (Non-interlace).
Each pixel is divided into Red, Green and Blue sub-pixels or dots which are arranged in vertical stripes. Gray scale or the brightness of the sub-pixel color is determined with a 8-bit gray scale signal for each dot.
The T460HW01 has been designed to apply the 8-bit 2 channel LVDS interface method. It is intended to support displays where high brightness, wide viewing angle, high color saturation, and high color depth are very important.

* General Information

Items	Specification	Unit	Note
Active Screen Size	46	Inches	
Display Area	1019.52 (H) x 573.48(V)	mm	
Outline Dimension	1109.34(H) x 654.56(V) x 51.68(D)	mm	With inverter
Driver Element	a-Si TFT active matrix		
Display Colors	16.7M	Colors	
Number of Pixels	1920 x 1080	Pixel	
Pixel Arrangement	RGB vertical stripe		
Display Mode	0.531(H) x 0.531(W)		
Surface Treatment	Hard-Coating, LR		

2. Absolute Maximum Ratings

The following are maximum values which, if exceeded, may cause faulty operation or damage to the unit.

Parameter	Symbol	Min.	Max.	Unit	Note
Power Input Voltage	**Vcc**	**-0.3**	**5.5**	V_{dc}	At 25±5℃
Operating Temperature	**T_{OP}**	**00**	**50**	℃	1
Storage Temperature	**H_{ST}**	**-20**	**60**	G	1
Operating Ambient Humidity	**H_{OP}**	**10**	**90**	%RH	1
Storage Humidity	**H_{ST}**	**10**	**90**	%RH	1

Note: 1. Temperature and relative humidity range are shown in the figure below. Wet bulb temperature should be 39℃

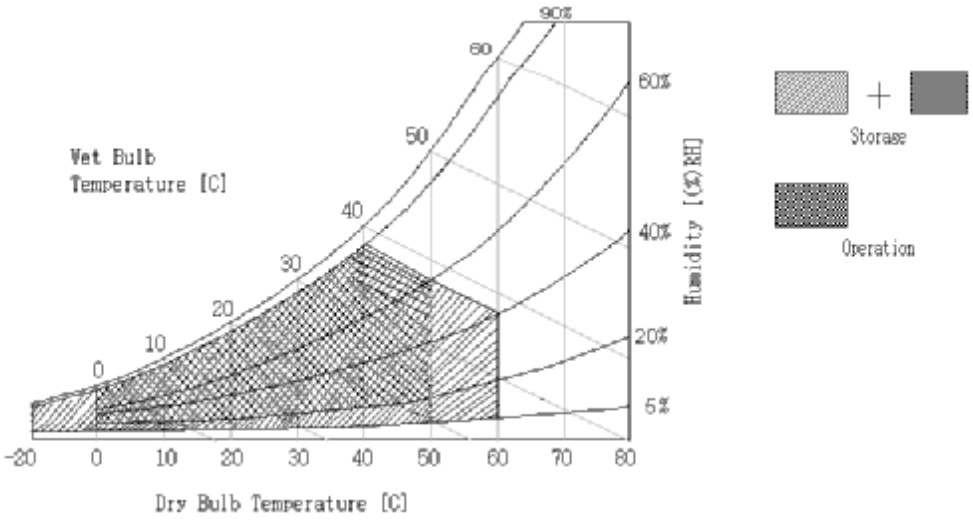

3. Electrical Specification

3-1 Electrical Characteristics

The T460HW01 requires two power inputs. One is employed to power the LCD electronics and to drive the TFT array and liquid crystal. The second input which powers the CCFL, is typically generated by an inverter.

Parameter	Symbol	Values			Unit	Notes
		Min	Typ	Max		
LCD:						
Power Supply Input Voltage	Vcc	10.80	12.0	13.20	Vdc	
Power Supply Input Current	Icc	-	2.0	2.5	A	1
Power Consumption	Pc	-	24.0	33.0	Watt	1
Inrush Current	I_{RUSH}	-	-	TBD	mApeak	
Backlight Power Consumption			280.0			2
Life Time			50,000			3

Note: The design of the inverter must have specifications for the lamp in LCD Assembly.
The performance of the Lamp in LCM, for example life time or brightness, is extremely influenced by the characteristics of the DC-AC Inverter. So all the parameters of an inverter should be carefully designed so as not to produce too much leakage current from high-voltage output of the inverter. When you design or order the inverter, please make sure unwanted lighting caused by the mismatch of the lamp and the inverter (no lighting, flicker, etc) never occurs. When you confirm it, the LCD Assembly should be operated in the same condition as installed in your instrument.

Note: Do not attach a conducting tape to lamp connecting wire. If the lamp wire attach to conducting tape, TFT-LCD Module have a low luminance and the inverter has abnormal action because leakage current occurs between lamp wire and conducting tape.

Note: The relative humidity must not exceed 80% non-condensing at temperatures of 40℃ or less. At temperatures greater than 40℃, the wet bulb temperature must not exceed 39℃. When operate at low temperatures, the brightness of CCFL will drop and the life time of CCFL will be reduced.

Note:

1. The specified current and power consumption are under the Vcc=12.0V, 25℃, fv= 60Hz, fCLK=65Mhz condition whereas mosaic pattern (8x6) is displayed and fv is the frame frequency.

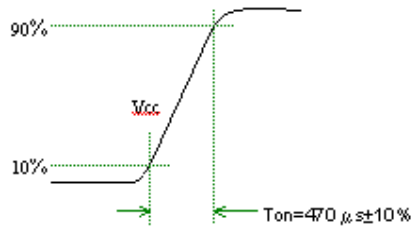

Sequence of Power-on/off and signal-on/off

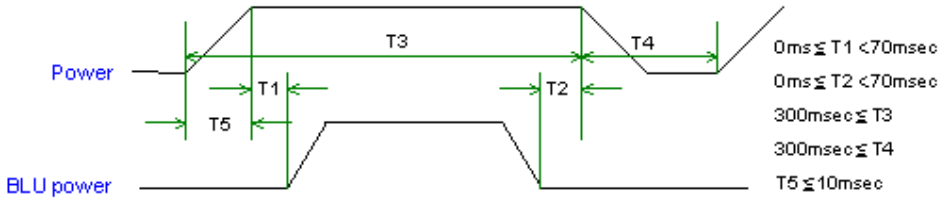

Apply the lamp voltage within the LCD operating range. When the backlight turns on before the LCD operation or the LCD turns off before the backlight turns off, the display may momentarily become abnormal.

Caution: The above on/off sequence should be applied to avoid abnormal function in the display. In case of handling, make sure to turn off the power when you plug the cable into the input connector or pull the cable out of the connector.

2. The lamp power consumption shown above does include loss of external inverter at 25℃.
   The used lamp current is the lamp typical current
3. The life is determined as the time at which luminance of the lamp is 50% compared to that of initial value at the typical lamp current on condition of continuous operating at 25±2℃

Note: The output of the inverter must have symmetrical (negative and positive) voltage waveform and symmetrical current waveform (Asymmetry ratio is less than 10%). Please do not use the inverter which has asymmetrical voltage and asymmetrical current and spike wave.
Requirements for a system inverter design which is intended to have a better display performance, a better power efficiency and a more reliable lamp.
It shall help increase the lamp lifetime and reduce its leakage current.

a. The asymmetry rate of the inverter current and voltage waveform should be 10% below;
b. The distortion rate of the current and voltage waveform should be within $\sqrt{2}$±10%;
c. The ideal sine current and voltage waveform shall be symmetric in positive and negative polarities.

3-2 Interface Connections

- LCD Connector (CN1): DF19G-20P-1H (HRS) or equivalent
- Mating Connector : DF19G-20S-1H (HRS) or equivalent
- LVDS Transmitter:

Pin No.	Symbol	Function	Polarity
0	GND	Ground	
1	RxEIN0-	LVDS Even Channel 0	Negative
2	RxEIN0+	LVDS Even Channel 0	Positive
3	RxEIN1-	LVDS Even Channel 1	Negative
4	RxEIN1+	LVDS Even Channel 1	Positive
5	RxEIN2-	LVDS Even Channel 2	Negative
6	RxEIN2+	LVDS Even Channel 2	Positive
7	GND	Ground	
8	RxECLKIN-	LVDS Even Channel CLK	Negative
9	RxECLKIN+	LVDS Even Channel CLK	Positive
10	RxEIN3-	LVDS Even Channel 3	Negative
11	RxEIN3+	LVDS Even Channel 3	Positive
12	RxOIN0-	LVDS Odd Channel 0	Negative
13	RxOIN0+	LVDS Odd Channel 0	Positive
14	GND	Ground	
15	RxOIN1-	LVDS Odd Channel 1	Negative
16	RxOIN1+	LVDS Odd Channel 1	Positive
17	GND	Ground	
18	RxOIN2-	LVDS Odd Channel 2	Negative
19	RxOIN2+	LVDS Odd Channel 2	Positive
20	RxOCLKIN-	LVDS Odd Channel CLK	Negative
21	RxOCLKIN+	LVDS Odd Channel CLK	Positive
22	RxOIN3-	LVDS Odd Channel 3	Negative
23	RxOIN3+	LVDS Odd Channel 3	Positive
24	GND	Ground	
25	NC(AGMODE)	Aging Mode	
26	NC	NC	
27	NC	NC	
28	POWER	+12V	
29	POWER	+12V	
30	POWER	+12V	
31	GND	Ground	

Note: 1. All GND (ground) pins should be connected together and also be connected to the LCD's metal frame.

All Vcc (power input) pins should be connected together.

LVDS Order

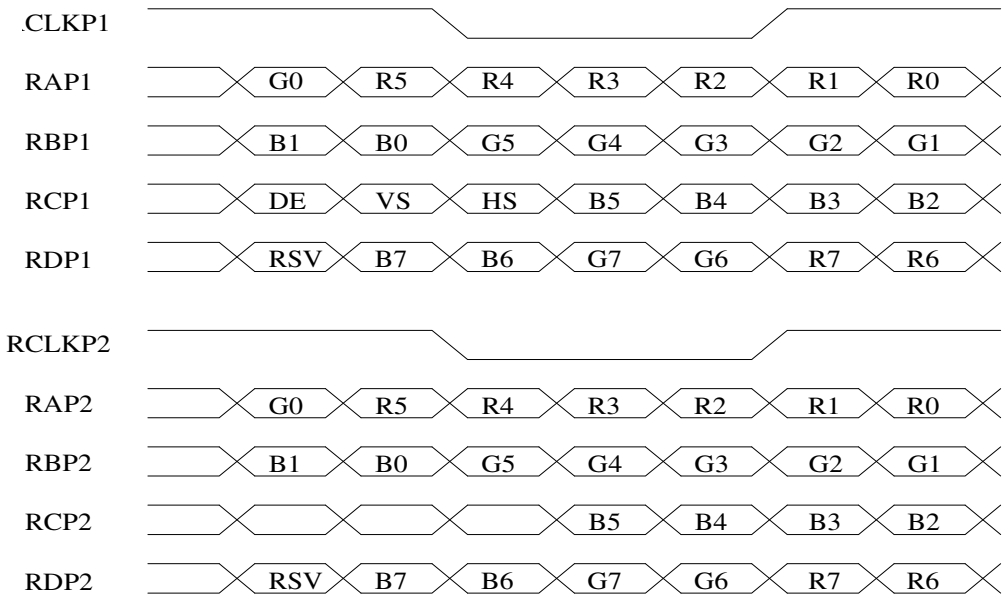

BACKLIGHT CONNECTOR PIN CONFIGURATION -

1 · Electrical specification

（Ta=25±5℃）

No	ITEM		SYMBOL	TEST CONDITION	MIN	TYP	MAX	UNIT	MEASURING CIRCUIT
1	Input voltage		VDDB		22.8	24.0	25.2	V	
2	Input current		IDDB	VDDB=24V,MAX	—	3900	—	mA	
				VDDB=24V,MIN	—	30	—	%	
3	Oscillating frequency		F0	VDDB=24V,MAX	—	62	—	kHz	
4	PWM frequency		FBI	VDDB=24V	—	270	—	Hz	
5	ON/OFF Control voltage	ON	BLON	VDDB=24V	2.0	—	5.0	V	or OPEN
		OFF	BLON	VDDB=24V	0	—	0.8	V	
6	Dimming Control voltage	MAX	VDIM	VDDB=24V	—	0	—	V	
		MIN	VDIM	VDDB=24V	—	3.0	—	V	

2 · Input specification

CN1: S10B-PH-SM3-TB(JST)

Pin №	Signal name	Feature
1	VDDB	+24V
2	VDDB	+24V
3	VDDB	+24V
4	VDDB	+24V
5	VDDB	+24V
6	GNDB	GND
7	GNDB	GND
8	GNDB	GND
9	GNDB	GND
10	GNDB	GND

CN2: S12B-PH-SM3-TB(JST)

Pin №	Signal name	Feature	
1	VDDB	+24V	
2	VDDB	+24V	
3	VDDB	+24V	
4	VDDB	+24V	
5	VDDB	+24V	
6	GNDB	GND	
7	GNDB	GND	
8	GNDB	GND	
9	GNDB	GND	
10	GNDB	GND	
12	VDIM	Bright control	※1
13	BLON	ON/OFF Signal	※2

※1: Connection of brightness control terminal

(1)Bright control by the variable resistor

VDIM-GND short-circuit : Min. brightness
VDIM-GND 10kΩ : Max. brightness
OPEN : Max. brightness

(2)Bright control by the voltage

3.0V : Min. brightness
0V : Max. brightness
OPEN : Max. brightness

※2: BLON Logic

H : Back Light ON
L : Back Light OFF
OPEN : Back Light ON

3-3 Input Timing Specifications

This is the signal timing required at the input of the User connector. All of the interface signal timing should be satisfied with the following specifications for it's proper operation.

Timing Table

(1) DE mode

Parameter	Symbol	Min.	Typ.	Max.	Unit	Condition
Clock frequency	1/tCLK	75	77	84	MHz	Frame rate @60Hz
Horizontal blanking	tHBL	70	90	160	tClk	
Vertical blanking	tVBL	130	150	170	tH	
End-frame checking period	tEF	5600			tCLK	tHBL(max) < tEF < (tHBL(min) + tHD) x tVBL(min)
DE checking period	tDE	224000			tCLK	(tHD + tHBL) x tVBL < tDE

(2) HV mode

Parameter	Symbol	Min.	Typ.	Max.	Unit	Condition
Clock frequency	1/tCLK	75/68	77	84	MHz	
Hsync period	tH	1030	1050	1120	tClk	tHmax<t12min+t14
Hsync pulse width+back porch	tHW+tHB	60			tClk	
Hsync front porch	tHF	10	30	100	tClk	
Horizontal active	tHD	960			tClk	
Vsync period	tV	1210/1100	1230	1250	tH	
Vsync pulse width+back porch	tVW+tVB	10			tH	

3-4 Signal Timing Waveforms

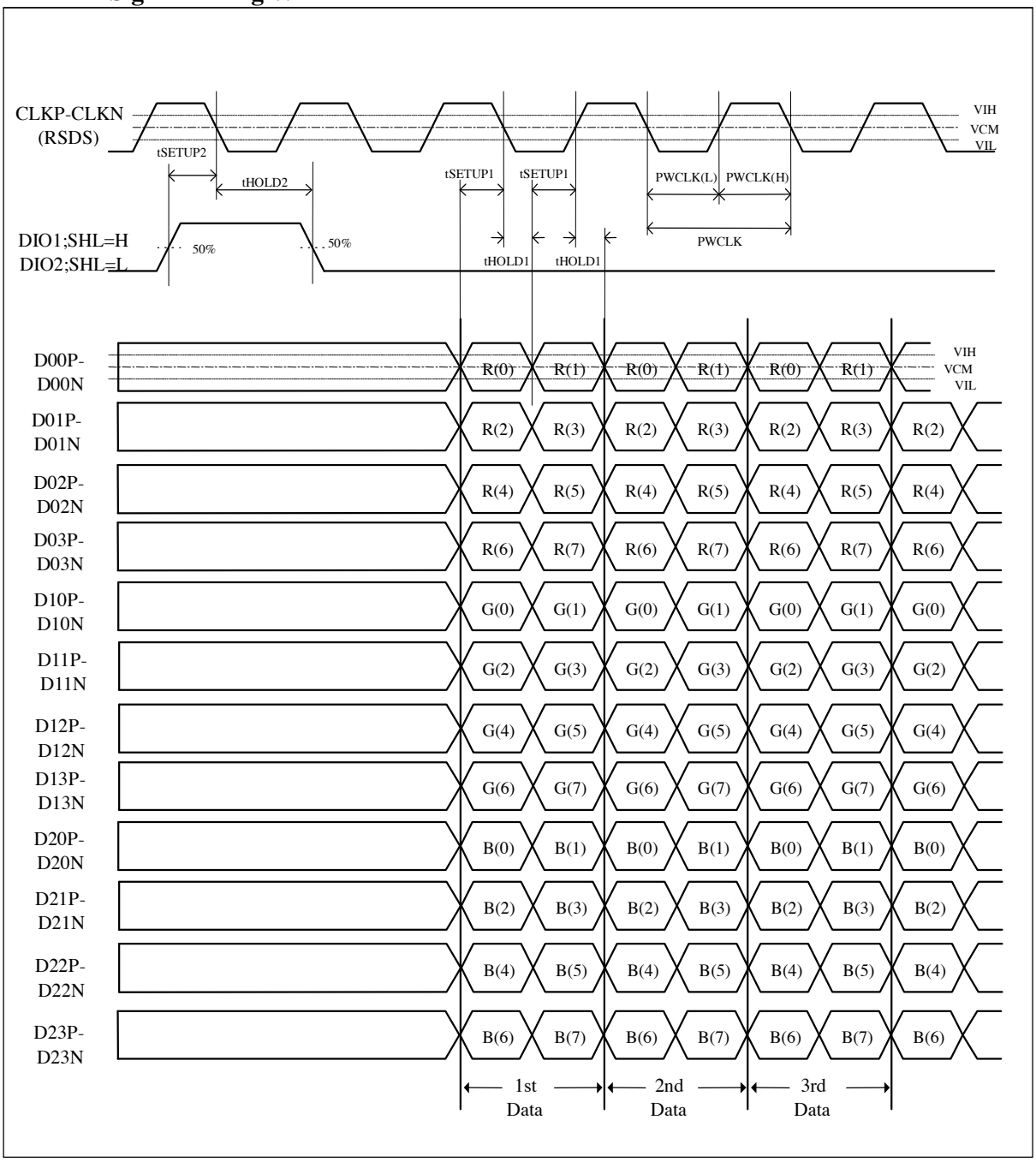

3-5 Color Input Data Reference

The brightness of each primary color (red, green and blue) is based on the 8 bit gray scale data input for the color; the higher the binary input, the brighter the color. The table below provides a reference for color versus data input.

COLOR DATA REFERENCE

Color		Input Color Data																							
		RED								GREEN								BLUE							
		MSB							LSB	MSB							LSB	MSB							LSB
		R7	R6	R5	R4	R3	R2	R1	R0	G7	G6	G5	G4	G3	G2	G1	G0	B7	B6	B5	B4	B3	B2	B1	B0
Basic Color	Black	0	0	0	0	0	0	0	0	0	0	0	0	0	0	0	0	0	0	0	0	0	0	0	0
	Red(255)	1	1	1	1	1	1	1	1	0	0	0	0	0	0	0	0	0	0	0	0	0	0	0	0
	Green(255)	0	0	0	0	0	0	0	0	1	1	1	1	1	1	1	1	0	0	0	0	0	0	0	0
	Blue(255)	0	0	0	0	0	0	0	0	0	0	0	0	0	0	0	0	1	1	1	1	1	1	1	1
	Cyan	0	0	0	0	0	0	0	0	1	1	1	1	1	1	1	1	1	1	1	1	1	1	1	1
	Magenta	1	1	1	1	1	1	1	1	0	0	0	0	0	0	0	0	1	1	1	1	1	1	1	1
	Yellow	1	1	1	1	1	1	1	1	1	1	1	1	1	1	1	1	0	0	0	0	0	0	0	0
	White	1	1	1	1	1	1	1	1	1	1	1	1	1	1	1	1	1	1	1	1	1	1	1	1
RED	RED(000)	0	0	0	0	0	0	0	0	0	0	0	0	0	0	0	0	0	0	0	0	0	0	0	0
	RED(001)	0	0	0	0	0	0	0	0	0	0	0	0	0	0	0	0	0	0	0	0	0	0	0	0

	RED(254)	1	1	1	1	1	1	1	0	0	0	0	0	0	0	0	0	0	0	0	0	0	0	0	0
	RED(255)	1	1	1	1	1	1	1	1	0	0	0	0	0	0	0	0	0	0	0	0	0	0	0	0
GREEN	GREEN(000)	0	0	0	0	0	0	0	0	0	0	0	0	0	0	0	0	0	0	0	0	0	0	0	0
	GREEN(001)	0	0	0	0	0	0	0	0	0	0	0	0	0	0	0	1	0	0	0	0	0	0	0	0

	GREEN(254)	0	0	0	0	0	0	0	0	1	1	1	1	1	1	1	0	0	0	0	0	0	0	0	0
	GREEN(255)	0	0	0	0	0	0	0	0	1	1	1	1	1	1	1	1	0	0	0	0	0	0	0	0
BLUE	BLUE(000)	0	0	0	0	0	0	0	0	0	0	0	0	0	0	0	0	0	0	0	0	0	0	0	0
	BLUE(001)	0	0	0	0	0	0	0	0	0	0	0	0	0	0	0	0	0	0	0	0	0	0	0	1

	BLUE(254)	0	0	0	0	0	0	0	0	0	0	0	0	0	0	0	0	1	1	1	1	1	1	1	0
	BLUE(255)	0	0	0	0	0	0	0	0	0	0	0	0	0	0	0	0	1	1	1	1	1	1	1	1

3-6 Power Sequence

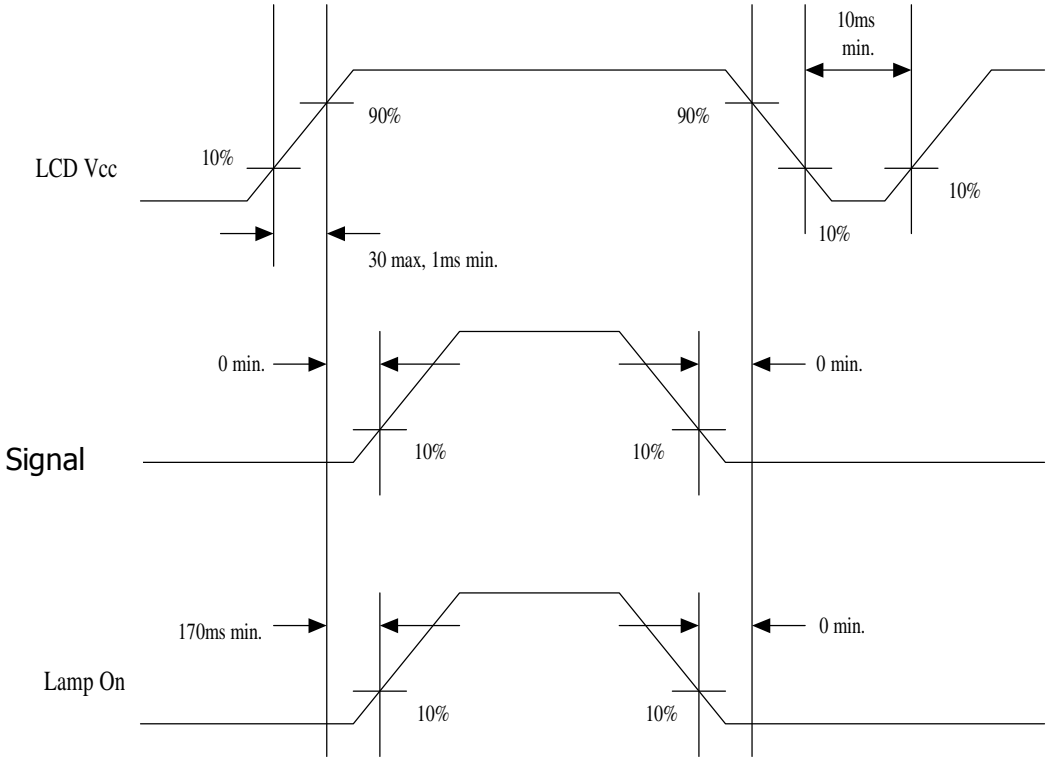

4. Optical Specification

Optical characteristics are determined after the unit has been 'ON' and stable for approximately 30 minutes in a dark environment at 25℃. The values specified are at an approximate distance 50cm from the LCD surface at a viewing angle of Φ and θ equal to 0°.

Fig.1 1 presents additional information concerning the measurement equipment and method.

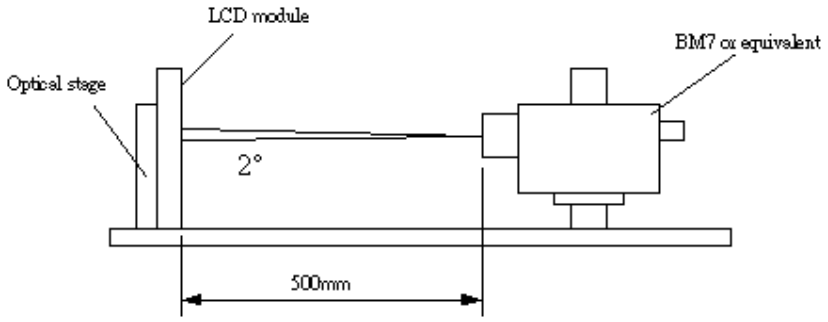

Parameter		Symbol	Values			Units	Notes
			Min.	Typ.	Max.		
Contrast Ratio		CR		800			1
Surface Luminance, white		LWH	500	600		cd/m²	2
Luminance Variation		δ_{WHITE} 5 p			TBD		3
Response Time		Gray to Gray		16.6		ms	
		Tr		15			4
		Tf		10			4
Color Chromaticity	RED	R_X					
		R_Y					
	GREEN	G_X					
		G_Y					
	BLUE	B_X					
		B_Y					
	WHITE	W_X					
		W_Y					
Viewing Angle							
	x axis, right(φ =0°)	θ_r		85		Degree	5
	x axis, left(φ =180°)	θ_l		85			
	y axis, up(φ =90°)	θ_u		85			
	y axis, down (φ =0°)	θ_d		85			

Note: 1. Contrast Ratio (CR) is defined mathematically as:

$$\textbf{Contrast Ratio} = \frac{\textbf{Surface Luminance with all white pixels}}{\textbf{Surface Luminance with all black pixels}}$$

1. Surface luminance is luminance value at point 1 across the LCD surface 50cm from the surface with all pixels displaying white. From more information see FIG 2. When I_{BL} = 6.5mA, L_{WH}=600cd/㎡(typ.) L_{WH}=Lon1
   Where Lon1 is the luminance with all pixels displaying white at center 1 location.
2. The variation in surface luminance, δ WHITE is defined (center of Screen) as:
   $$\delta_{WHITE(5P)} = \text{Maximum}(L_{on1}, L_{on2}, \ldots, L_{on5}) / \text{Minimum}(L_{on1}, L_{on2}, \ldots L_{on5})$$
3. Response time is the time required for the display to transition from to black (Rise Time, Tr_R) and from black to white (Decay Time, Tr_D). For additional information see FIG3.
4. Viewing angle is the angle at which the contrast ratio is greater than 5. The angles are determined for the horizontal or x axis and the vertical or y axis with respect to the z axis which is normal to the LCD surface. For more information see FIG4.

FIG. 2 Luminance

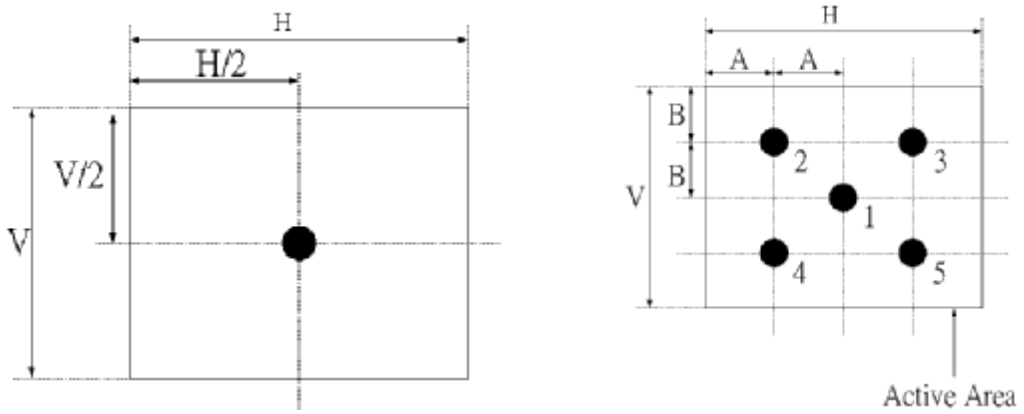

FIG.3 Response Time

The response time is defined as the following figure and shall be measured by switching the input signal for "black" and "white".

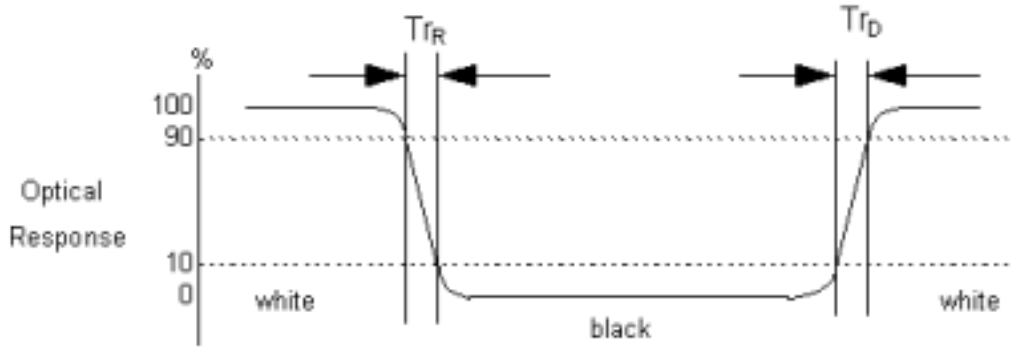

FIG.4 Viewing angle

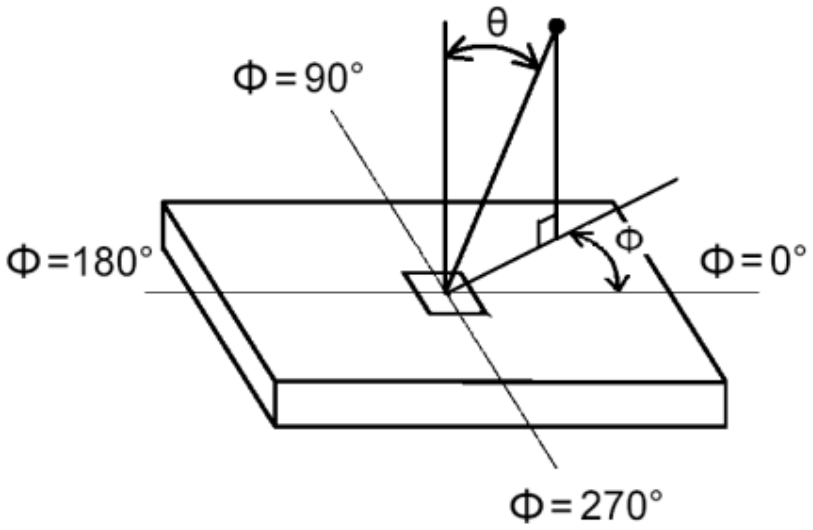

5. Mechanical Characteristics

The contents provide general mechanical characteristics for the model T460HW01. In addition the figures in the next page are detailed mechanical drawing of the LCD.

Outline Dimension	Horizontal	1109.34mm
	Vertical	654.56mm
	Depth	51.68mm(w/I inverter) 43.68mm(w/o inverter)
Bezel Area	Horizontal	1025.52mm
	Vertical	579.48mm
Active Display Area	Horizontal	1019.52mm
	Vertical	573.48mm
Weight	15000g (Typ.)	
Surface Treatment	Hard Coating, LR	

Front View

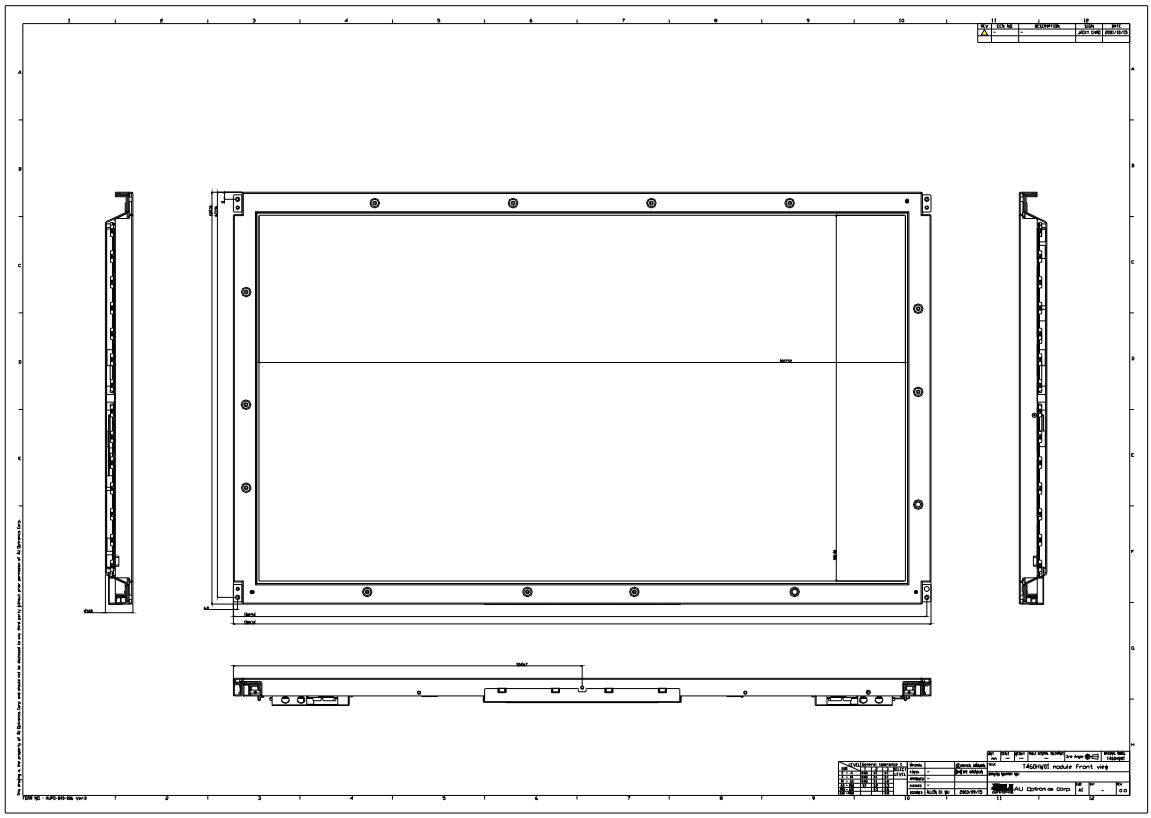

Rear View

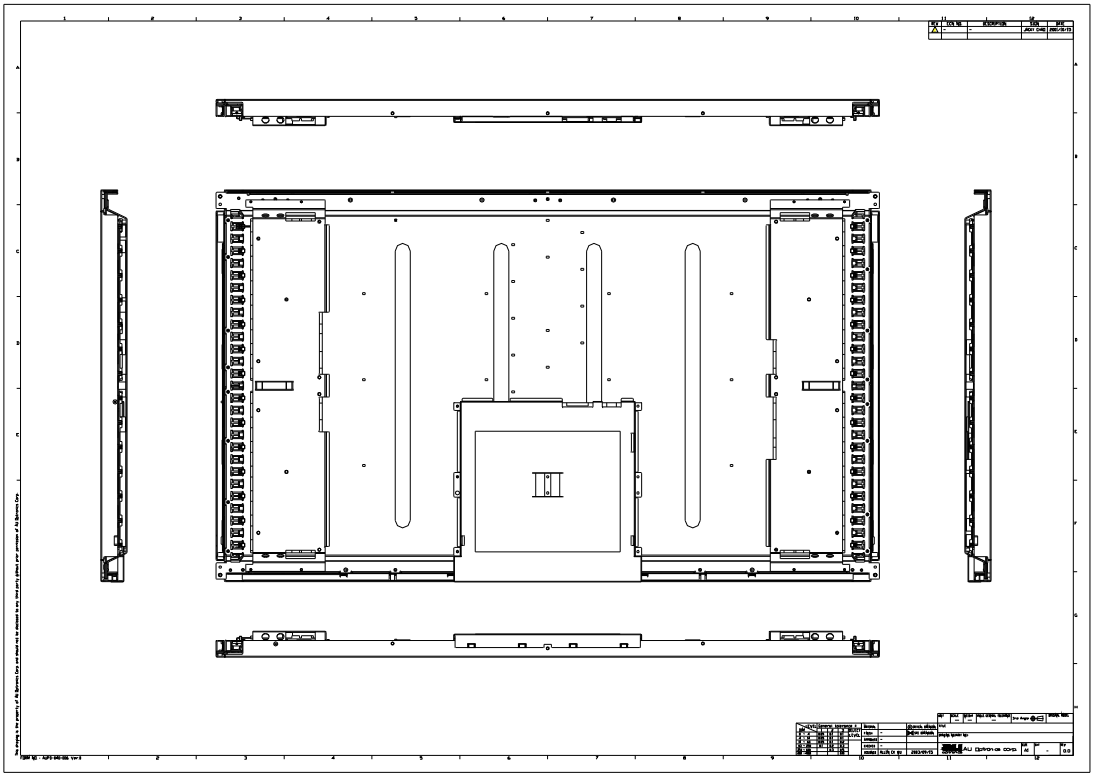

6. Reliability

Environment test condition

No	Test Item	Condition
1	High temperature storage test	Ta=60℃ 240h
2	Low temperature storage test	Ta=-20℃ 240h
3	High temperature operation test	Ta=50℃ 50%RH 240h
4	Low temperature operation test	Ta=0℃ 240h
5	Vibration test (non-operating)	Wave form: random Vibration level : 1.0G RMS Bandwidth : 10-500Hz Duration: X, Y, Z 20min One time each direction
6	Shock test (non-operating)	Shock level: TBD Waveform: half since wave, 2ms Direction: ±X, ±Y, ±Z One time each direction
7	Vibration test (with carton)	Sin Vibration:10~200Hz,1.5G,30minutes in each X,Y,Z direction
8	Altitude Storage/shipment	0-40,000 feet (12,192m)

{ Result Evaluation Criteria }

There should be no change which might affect the practical display function when the display quality test is conducted under normal operating condition.

7. International Standard

7-1. Safety

(1) UL1950 Third Edition, Underwriters Laboratories, Inc. Jan. 28, 1995

Standard for Safety of Information Technology Equipment Including electrical Business Equipment.

(2) CAN/CSA C22.2 No. 950-95 Third Edition, Canadian Standards Association, Jan. 28, 1995

Standard for Safety of Information Technology Equipment Including Electrical Business Equipment.

(3) EN60950 : 1992+A2: 1993+A2: 1993+C3: 1995+A4: 1997+A11: 1997

IEC 950: 1991+A1: 1992+A2: 1993+C3: 1995+A4:1996

European Committee for Electrotechnical Standardization (CENELEC)

EUROPEAN STANDARD for Safety of Information Technology Equipment Including Electrical Business Equipment.

7-2. EMC

a) ANSI C63.4 “Methods of Measurement of Radio-Noise Emissions from Low-Voltage Electrical and Electrical Equipment in the Range of 9kHz to 40GHz. “American National standards Institute(ANSI), 1992

b) C.I.S.P.R “Limits and Methods of Measurement of Radio Interface Characteristics of Information Technology Equipment.” International Special committee on Radio Interference.

c) EN 55022 “Limits and Methods of Measurement of Radio Interface Characteristics of Information Technology Equipment.” European Committee for Electrotechnical Standardization. (CENELEC), 1998

8. Packing

(1) Label Sample

(2) Carton Label

(3) Carton Size

The outside dimension of carton is 810(L) mm * 270(W)mm * 490(H)mm.

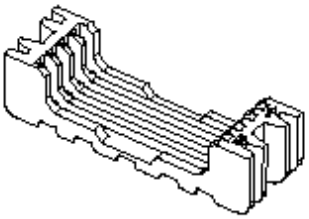

Cushion bottom

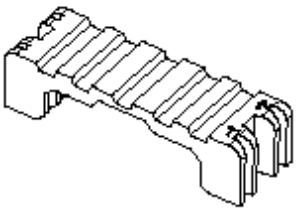

Cushion top

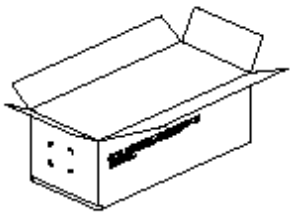

Carton box

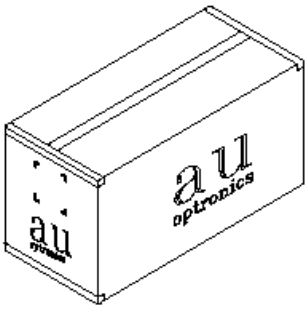

9. PRECAUTIONS

Please pay attention to the followings when you use this TFT LCD module.

9-1 MOUNTING PRECAUTIONS

(1) You must mount a module using holes arranged in four corners or four sides.
(2) You should consider the mounting structure so that uneven force (ex. Twisted stress) is not applied to module. And the case on which a module is mounted should have sufficient strength so that external force is not transmitted directly to the module.
(3) Please attach the surface transparent protective plate to the surface in order to protect the polarizer. Transparent protective plate should have sufficient strength in order to the resist external force.
(4) You should adopt radiation structure to satisfy the temperature specification.
(5) Acetic acid type and chlorine type materials for the cover case are not desirable because the former generates corrosive gas of attacking the polarizer at high temperature and the latter causes circuit break by electro-chemical reaction.
(6) Do not touch, push or rub the exposed polarizers with glass, tweezers or anything harder than HB pencil lead. And please do not rub with dust clothes with chemical treatment. Do not touch the surface of polarizer for bare hand or greasy cloth. (Some cosmetics are detrimental to the polarizer.)
(7) When the surface becomes dusty, please wipe gently with absorbent cotton or other soft materials like chamois soaks with petroleum benzene. Normal-hexane is recommended for cleaning the adhesives used to attach front/ rear polarizers. Do not use acetone, toluene and alcohol because they cause chemical damage to the polarizer.
(8) Wipe off saliva or water drops as soon as possible. Their long time contact with polarizer causes deformations and color fading.
(9) Do not open the case because inside circuits do not have sufficient strength.

9-2 OPERATING PRECAUTIONS

(1) The spike noise causes the mis-operation of circuits. It should be lower than following voltage: V=±200mV(Over and under shoot voltage)
(2) Response time depends on the temperature. (In lower temperature, it becomes longer..)
(3) Brightness depends on the temperature. (In lower temperature, it becomes lower.) And in lower temperature, response time (required time that brightness is stable after turned on) becomes longer.
(4) Be careful for condensation at sudden temperature change. Condensation makes damage to polarizer or electrical contacted parts. And after fading condensation, smear or spot will occur.
(5) When fixed patterns are displayed for a long time, remnant image is likely to occur.
(6) Module has high frequency circuits. Sufficient suppression to the electromagnetic interference shall be done by system manufacturers. Grounding and shielding methods may be important to minimize the interface.

9-3 ELECTROSTATIC DISCHARGE CONTROL

Since a module is composed of electronic circuits, it is not strong to electrostatic discharge. Make certain that treatment persons are connected to ground through wrist band etc. And don't touch interface pin directly.

9-4 PRECAUTIONS FOR STRONG LIGHT EXPOSURE

Strong light exposure causes degradation of polarizer and color filter.

9-5 STORAGE

When storing modules as spares for a long time, the following precautions are necessary.

(1) Store them in a dark place. Do not expose the module to sunlight or fluorescent light. Keep the temperature between 5℃ and 35℃ at normal humidity.

(2) The polarizer surface should not come in contact with any other object. It is recommended that they be stored in the container in which they were shipped.

9-6 HANDLING PRECAUTIONS FOR PROTECTION FILM

(1) The protection film is attached to the bezel with a small masking tape. When the protection film is peeled off, static electricity is generated between the film and polarizer. This should be peeled off slowly and carefully by people who are electrically grounded and with well ion-blown equipment or in such a condition, etc.

(2) When the module with protection film attached is stored for a long time, sometimes there remains a very small amount of flue still on the Bezel after the protection film is peeled off.

(3) You can remove the glue easily. When the glue remains on the Bezel or its vestige is recognized, please wipe them off with absorbent cotton waste or other soft material like chamois soaked with normal-hexane.