(V) Preliminary Specification
( ) Final Specification

Module	21.5” Color TFT-LCD
Model Name	Z215HVN02

Customer	Date	Approved by	Date
		Crystal Hsieh	2014/09/02
Approved by		**Prepared by**	
		Jimmy Tsai	2014/09/02
Note: This Specification is subject to change without notice.		AU Optronics Corporation	

Content

Records of Revision

Version and Date	Page	Old description	New Description	Remark
0.1 2013/12/04	All	First Version		
0.2 2014/01/07	5	Weight [g] TBD	Weight [g] 2,650	
	23	BLU LED connector: CP0502SL000	BLU LED connector: CI1412SL00-NH	
	26	Old Drawing	Update drawing	
	28	▪11 Packing Specification TBD	▪11 Packing Specification • Carton Box: 466(L) x403(W) x647(H) mm • Weight: 9.5kg/ per carton • Capacity: 3pcs/ per carton	
0.3 2014/08/19	5	Size: 515.6 (W) * 269.6 (H) *73.7 (D)	Size: 515.6 (W) * 269.7 (H) *73.7 (D)	
	5	Power Consumption [Watt] Total: 38.5 (Panel: 3.45 & BL:35)	Power Consumption [Watt] Total: 50.3 (Panel: 3.5 & BL:46.8)	
	16	PBLU BLU Power Consumption (for reference) 35 [Watt] LTLED LED Life Time (Typical) 30,000 [Hour] Each module consists of 72 pcs LED (6 strings x 12 pcs / string)	PBLU BLU Power Consumption (for reference) 46.8 [Watt] LTLED LED Life Time (Typical) 30,000 [Hour] Each module consists of 96 pcs LED	
	23	 <Reference Drawing of LED connector> *7.2.1 LED Pin assignment Pin# / Signal Name 1 VLED (voltage in) 2 VLED (voltage in) 3 VLED (voltage in) 4 VLED (voltage in) 5 VLED (voltage in) 6 VLED (voltage in) 7 IRLED (current out) 8 IRLED (current out) 9 IRLED (current out) 10 IRLED (current out) 11 IRLED (current out) 12 IRLED (current out)	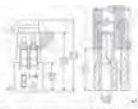 <Reference Drawing of LED connector> *7.2.1 LED Pin assignment Pin# / Signal Name 1 VLED (voltage in) 2 IRLED (current out)	
	26	Drawing	Update drawing	
0.4 2014/09/02	5	[Watt] Total: 50.3 (Panel: 3.5 & BL:46.8)	[Watt] Total: 42.4 (Panel: 3.5 & BL:38.9)	
	11	Item / Symbol / Min / Max / Unit / Conditions LED Forward Current / IRLED1 IRLED2 IRLED3 IRLED4 / 0 / TBD / [mA] / Note 1,2,5- 100% duty LED Pulse Forward Current / IPLED1 IPLED2 IPLED3 IPLED4 / - / TBD / [mA] / Note 1,2,5- 10% duty @100Hz LED forward Voltage variation (per string variation) / ΔVf / - / 3.2 / [Volt] / Note 1,2	Item / Symbol / Min / Max / Unit / Conditions LED Forward Current / IRLED1 IRLED2 IRLED3 IRLED4 / 0 / 120 / [mA] / Note 1,2,5- 100% duty LED Pulse Forward Current / IPLED1 IPLED2 IPLED3 IPLED4 / - / TBD / [mA] / Note 1,2,5- 10% duty @100Hz LED forward Voltage variation (per string variation) / ΔVf / - / 3.6 / [Volt] / Note 1,2	
	16	5.2 Backlight Unit Parameter guideline for LED driving is under stable conditions at 25 °C (Room Temperature) Symbol / Description / Min. / Typ. / Max. / Unit / Note IRLED / LED Operation Current / - / 450 / - / [mA] / Note 1 VLB / Light Bar Operation Voltage (for reference) / - / 13 / - / [Volt] / Note 2 PBLU / BLU Power Consumption (for reference) / - / 46.8 / - / [Watt] / Note 3 LTLED / LED Life Time (Typical) / 30,000 / - / - / [Hour] / Note 4	Symbol / Description / Min. / Typ. / Max. / Unit / Note IRLED / LED Operation Current / - / 115 / - / [mA] / Note 1 VLB / Light Bar Operation Voltage (for reference) / - / 14.08 / - / [Volt] / Note 2 PBLU / BLU Power Consumption (for reference) / - / 38.86 / - / [Watt] / LTLED / LED Life Time (Typical) / 30,000 / - / - / [Hour] / Note 3	

1 Handling Precautions

1) Since front polarizer is easily damaged, pay attention not to scratch it.
2) Be sure to turn off power supply when inserting or disconnecting from input connector.
3) Wipe off water drop immediately. Long contact with water may cause discoloration or spots.
4) When the panel surface is soiled, wipe it with absorbent cotton or other soft cloth.
5) Since the panel is made of glass, it may break or crack if dropped or bumped on hard surface.
6) Since CMOS LSI is used in this module, take care of static electricity and insure human earth when handling.
7) Do not open or modify the Module Assembly.
8) Do not press the reflector sheet at the back of the module to any directions.
9) In case if a Module has to be put back into the packing container slot after once it was taken out from the container, do not press the center of LED light bar edge. Instead, press at the far ends of the LED light bar edge softly. Otherwise the TFT Module may be damaged.
10) At the insertion or removal of the Signal Interface Connector, be sure not to rotate nor tilt the Interface Connector of the TFT Module.
11) After installation of the TFT Module into an enclosure, do not twist nor bend the TFT Module even momentary. At designing the enclosure, it should be taken into consideration that no bending/twisting forces are applied to the TFT Module from outside. Otherwise the TFT Module may be damaged.
12) Small amount of materials having no flammability grade is used in the LCD module. The LCD module should be supplied by power complied with requirements of Limited Power Source (IEC60950 or UL1950), or be applied exemption.
13) Avoid touching COF position while doing mechanical design.
14) While storing modules as spares for a long time, the following precautions are necessary:
    - Store modules in a dark place. Do not expose them to sunlight or fluorescent light.
    - Keep the temperature between 5℃ and 35℃ at normal humidity.

2 General Description

This specification applies to the 21.5 inch-FHD color a-Si TFT-LCD Module Z215HVN02 The display supports the FHD - 1920(H) x 1080(V) screen format and 16.7M colors (RGB 8-bit data). The light source of this TFT-LCD module is W-LED. All input signals are 2-channel LVDS interface and this module doesn't contain a driver for backlight.

2.1 Display Characteristics

The following items without notification are defined at 25℃ ambient temp. and in flat display.

Items	Unit	Specification
Screen Diagonal	[mm]	546.865(21.53")
Active Area	[mm]	476.64 (H) x 268.11 (V)
Active Area* (Curved)	[mm]	476.64 (H) x 242.7 (V)
Pixels H x V		1920(x3) x 1080
Pixel Pitch	[um]	248.25 (per one triad) ×248.25
Pixel Arrangement		R.G.B. Vertical Stripe
Display Mode		VA Mode, Normally Black
White Luminance (Center)	[cd/m2]	350 nits
Contrast Ratio		1000
Optical Response Time	[msec]	25 ms (on/off)
Nominal Input Voltage VDD	[Volt]	+ 5.0 V
Power Consumption	[Watt]	Total: 42.4 (Panel: 3.5 & BL:38.9)
Weight	[g]	2,650
Physical Size*	[mm]	515.6 (W) * 269.7 (H) *73.7 (D)
Radius*	[mm]	180mm, Convex
Electrical Interface		Dual channel LVDS
Support Color		16.7M colors (RGB 8-bit)
Surface Treatment		Anti-Glare, 3H
Temperature Range Operating Storage (Shipping)	 [℃] [℃]	 0 to +50 -20 to +60
RoHS Compliance		RoHS Compliance

Note *: Refer drawing in page 26.

2.2 Optical Characteristics

The optical characteristics are measured under stable conditions at 25℃:

Item	Unit	Conditions	Min.	Typ.	Max.	Note
Viewing Angle	[degree]	Horizontal (Right) CR = 10 (Left)		TBD	- -	***2***
		Vertical (Up) CR = 10 (Down)		TBD	- -	
Contrast Ratio		Normal Direction	800	1000	-	***3***
Response Time	[msec]	Rising Time (TrR)	-	TBD	-	***4***
		Falling Time (TrF)	-	TBD	-	
		Rising + Falling	-	TBD	-	
Color / Chromaticity Coordinates (CIE)		Red x	-0.03	0.645	+0.03	***5***
		Red y		0.334		
		Green x		0.313		
		Green y		0.636		
		Blue x		0.154		
		Blue y		0.044		
		White x		0.313		
		White y		0.329		
Central Luminance	[cd/m2]		280	350	-	***6***
Luminance Uniformity	[%]			60	-	***7***
Crosstalk (in 60Hz)	[%]		-	-	TBD	***8***
Flicker	dB		-	-	-20	***9***

Note 1: **Measurement Method**

The LCD module should be stabilized at given temperature for 30 minutes to avoid abrupt temperature change during measuring (at surface 35℃). In order to stabilize the luminance, the measurement should be executed after lighting Backlight for 30 minutes in a stable, windless and dark room.

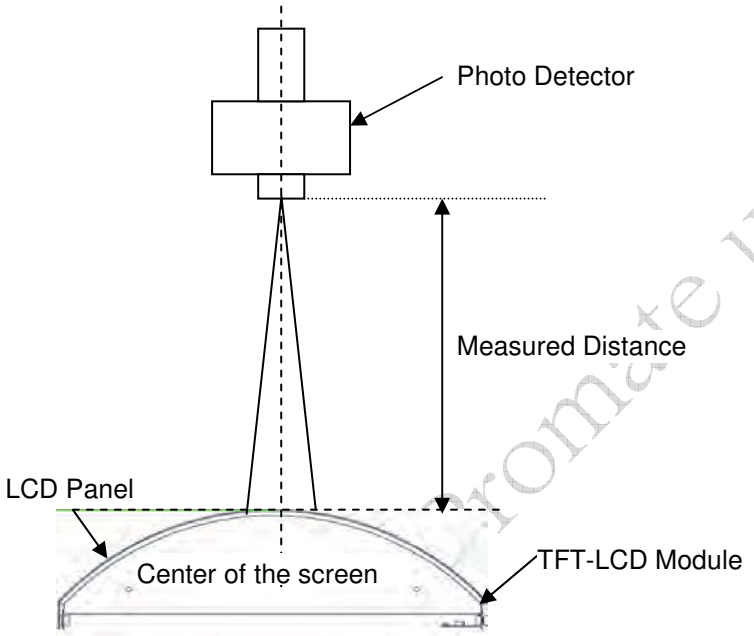

Note 2: **Definition of Viewing Angle** measured by ELDIM (EZContrast 88)

Viewing angle is the measurement of contrast ratio ≧10, at the screen center, over a 180° horizontal and 180° vertical range (off-normal viewing angles). The 180° viewing angle range is broken down as follows; 90° (θ) horizontal left and right and 90° (Φ) vertical, high (up) and low (down). The measurement direction is typically perpendicular to the display surface with the screen rotated about its center to develop the desired measurement viewing angle.

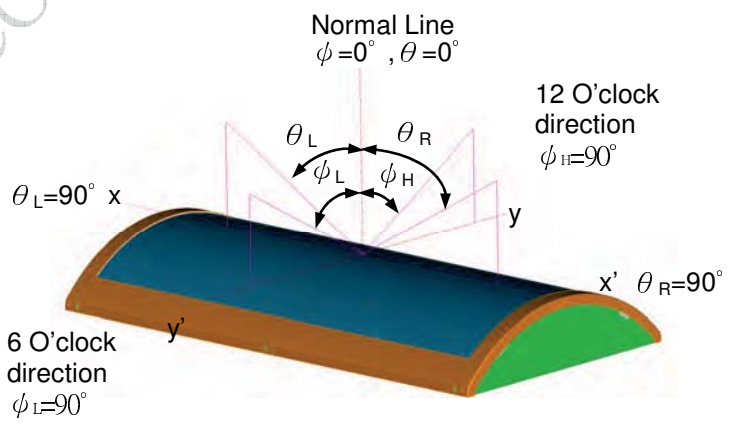

Note 3: **Contrast Ratio** measured by TOPCON SR-3

Note 4: **Definition of Response time** measured by Westar TRD-100A

The output signals of photo detector are measured when the input signals are changed from "Full Black" to "Full White" (rising time, T_{rR}), and from "Full White" to "Full Black" (falling time, T_{rF}), respectively. The response time is interval between the 10% and 90% (1 frame at 60 Hz) of amplitudes.

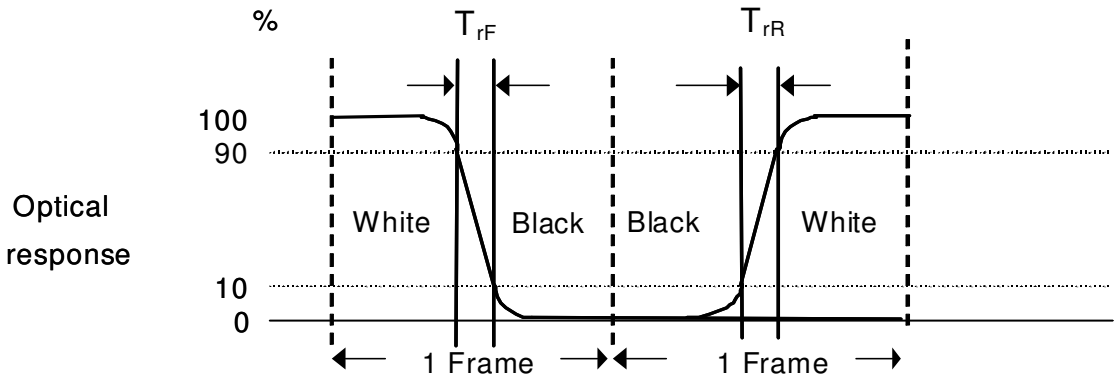

$T_{rR} + T_{rF}$ = 25 msec (typ.).

Note 5: **Color Chromaticity and Coordinates (CIE)** measured by TOPCON SR-3

Note 6: **Central Luminance** measured by TOPCON SR-3

Note 7: **Luminance Uniformity** of these 9 points defined as below and measured by TOPCON SR-3

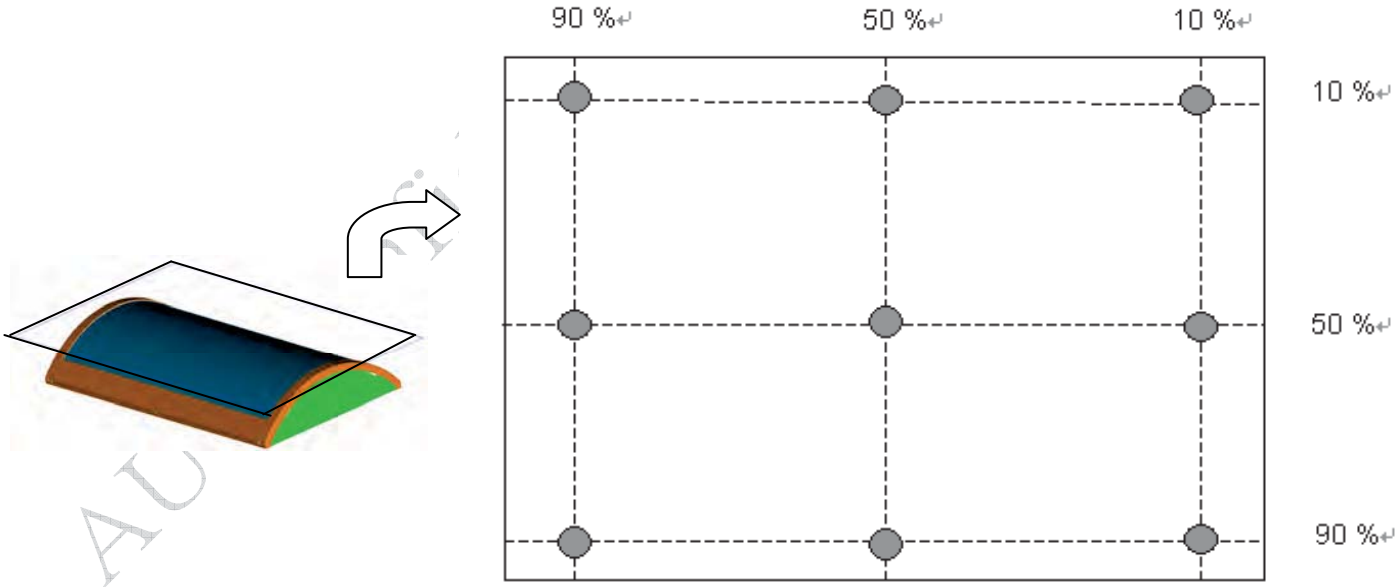

$$\text{Uniformity} = \frac{\text{Minimum Luminance in 9 points (1 - 9)}}{\text{Maximum Luminance in 9 Points (1 - 9)}}$$

Note 8: **Crosstalk** defined as below and measured by TOPCON SR-3

CT = | YB – YA | / YA × 100 (%)

Where

YA = Luminance of measured location without gray level 0 pattern (cd/m2)

YB = Luminance of measured location with gray level 0 pattern (cd/m2)

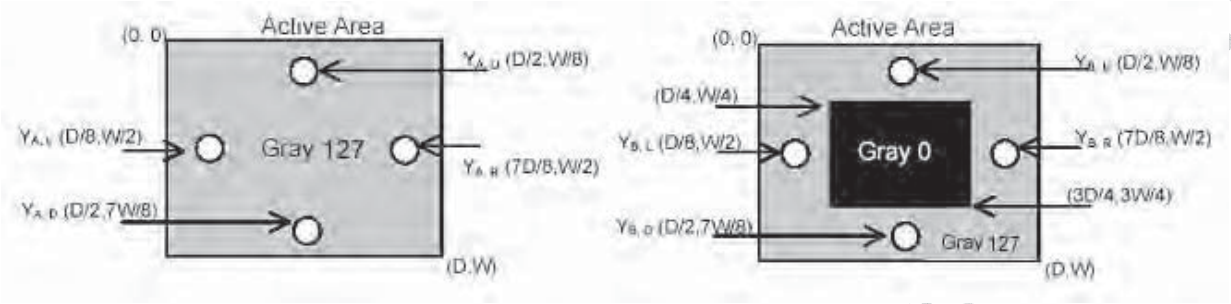

<Projected plane of AA>

Note 9: **Test Pattern Sub-checker Pattern** measured by TOPCON SR-3

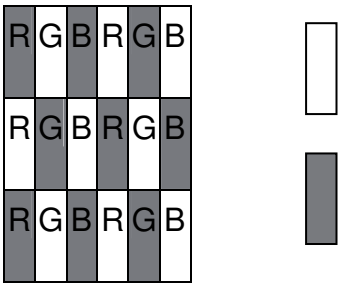

Method: Record dBV & DC value with TRD-100

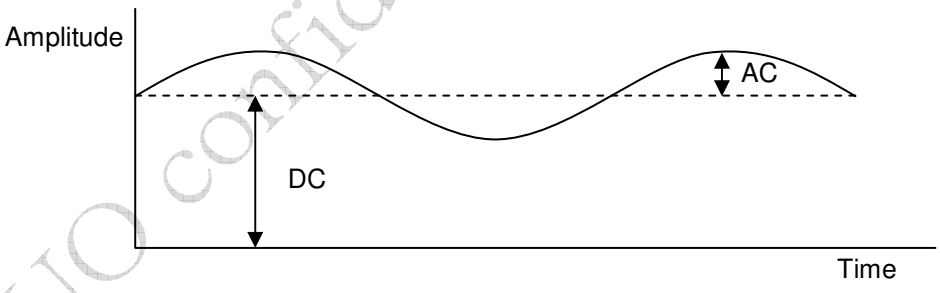

$$\text{Flicker (dB)} = 20\log\frac{\text{AC Level(at 30 Hz)}}{\text{DC Level}}$$

3 Functional Block Diagram

The following diagram shows the functional block of the 21.5 inch Color TFT-LCD Module:

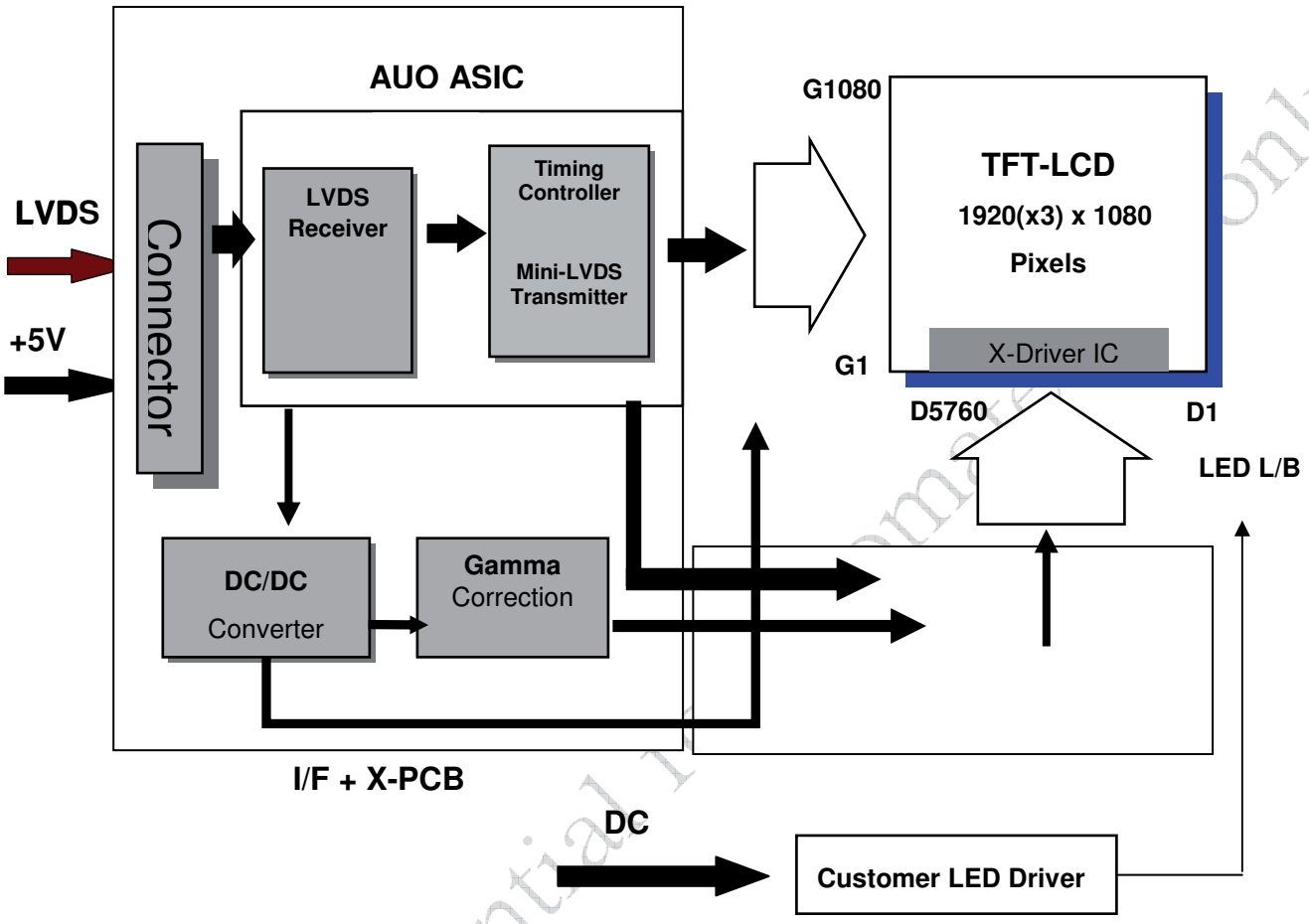

4 Absolute Maximum Ratings

Absolute maximum ratings of the module are listed as follows:

4.1 TFT LCD Module

Item	Symbol	Min	Max	Unit	Conditions
Logic/LCD Drive	VDD	-0.3	6	[Volt]	***Note 1, 2***

4.2 Backlight Unit

Item	Symbol	Min	Max	Unit	Conditions
LED Forward Current	IRLED	0	120	[mA]	***Note 1,2*** **100% duty**
LED Pulse Forward Current	IPLED	-	TBD	[mA]	***Note 1,2*** **10% duty @100Hz**
LED forward Voltage variation (per string variation)	△Vf	-	3.6	[Volt]	***Note 1,2***

4.3 Absolute Ratings of Environment

Item	Symbol	Min.	Max.	Unit	Conditions
Operating Temperature	TOP	0	+50	[℃]	***Note 3*** ***Note4***
Operation Humidity	HOP	5	90	[%RH]	
Storage Temperature	TST	-20	+60	[℃]	***Note 3***
Storage Humidity	HST	5	90	[%RH]	

Note 1: With in Ta (25 ℃)
Note 2: Permanent damage to the device may occur if exceeding maximum values
Note 3: Temperature and relative humidity range are shown as the below figure.
1. 90% RH Max (Ta ≦39℃)
2. Max wet-bulb temperature at 39℃ or less. (Ta ≦39℃)
3. No condensation

Note 4: Function Judged only

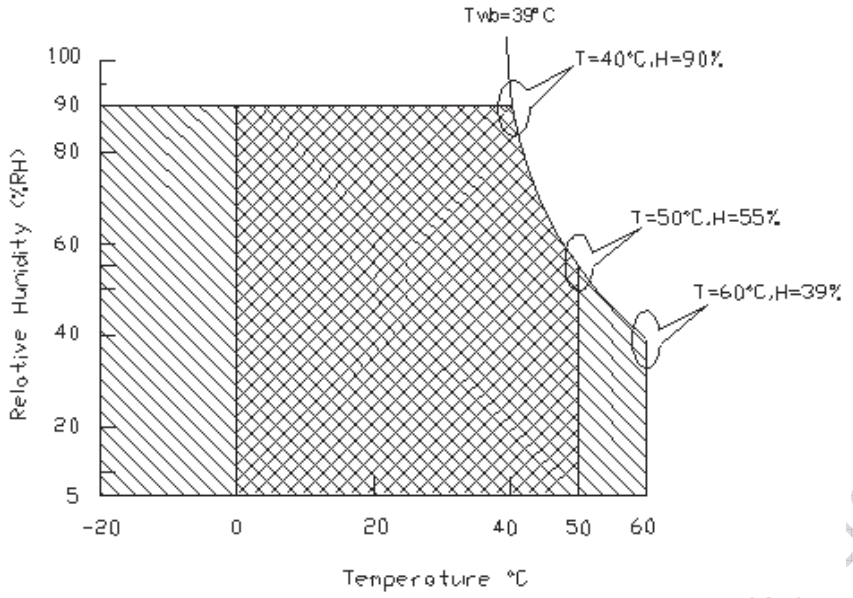

Operating Range 

Storage Range 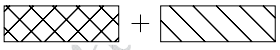

5 Electrical Characteristics

5.1 TFT LCD Module

5.1.1 Power Specification

Input power specifications are listed as follows:

Symbol	Description	Min	Typ.	Max	Unit	Conditions
VDD	Logic/LCD Drive Voltage	4.5	5.0	5.5	[Volt]	+/-10%
IDD1	Input Current	-	0.69	0.83	[A]	VDD= 5.0V, All White Pattern at 60 Hz
		-	0.8	0.96	[A]	VDD= 5.0V, All White Pattern at 75 Hz
PDD1	VDD Power	-	3.45	4.15	[Watt]	VDD= 5.0V, All White Pattern at 60 Hz
		-	4	4.8	[Watt]	VDD= 5.0V, All White Pattern at 75 Hz
IRush	Inrush Current	-	-	3	[A]	***Note 1***
VDDrp	Allowable Logic/LCD Drive Ripple Voltage	-	-	500	[mV] p-p	VDD= 5.0V, All White Pattern at 75 Hz

Note 1: **Measurement Conditions:**

The duration of rising time of power input is 470 us.

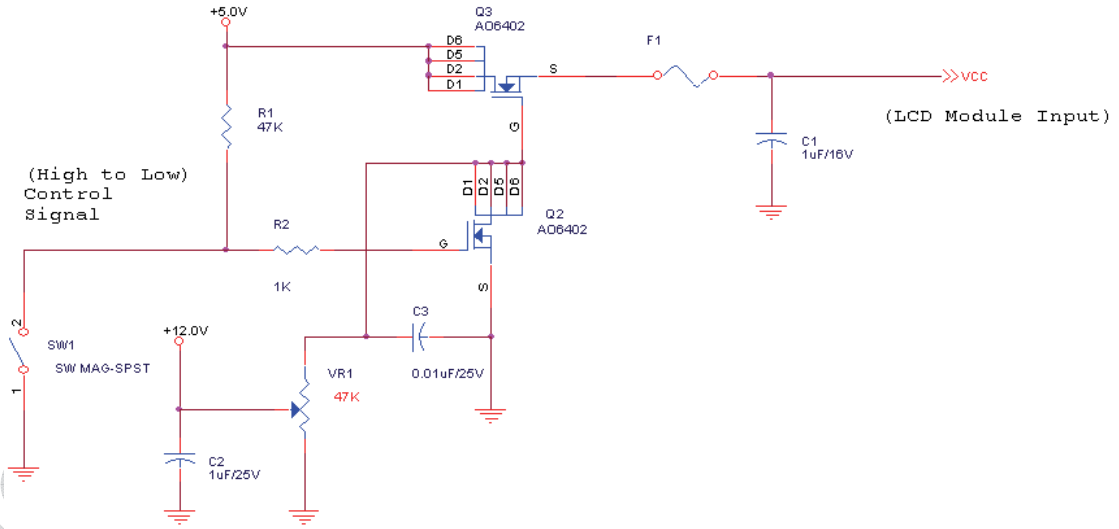

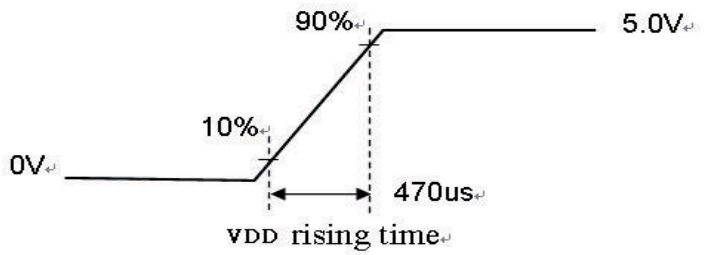

5.1.2 Signal Electrical Characteristics

(1) DC Characteristics of each signal are as following:

Symbol	Description	Min	Typ	Max	Units	Conditions
V_{TH}	Differential Input High Threshold	-	-	+100	[mV]	V_{CM} = 1.2V ***Note 1***
V_{TL}	Differential Input Low Threshold	-100	-	-	[mV]	V_{CM} = 1.2V ***Note 1***
$\lvert V_{ID} \rvert$	Input Differential Voltage	100	-	600	[mV]	***Note 1***
V_{CM}	Differential Input Common Mode Voltage	+1.0	+1.2	+1.5	[V]	V_{TH}-V_{TL} = 200MV (max) ***Note 1***

Note 1: LVDS Signal Waveform

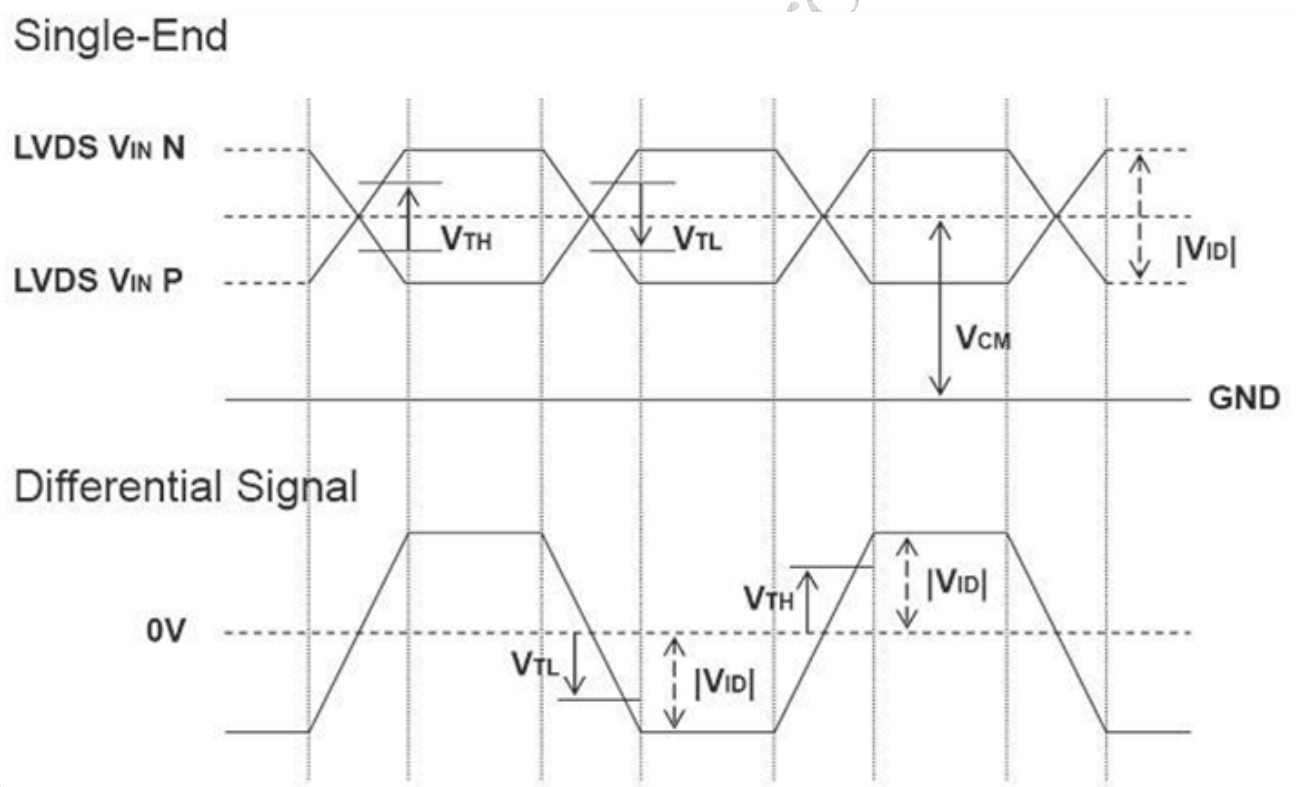

(2) AC Characteristics

Symbol	Description	Min	Max	Units	Conditions
F_{DEV}	Maximum deviation of input clock frequency during SSC	-	± 3	%	
F_{MOD}	Maximum modulation frequency of input clock during SSC	-	200	KHz	

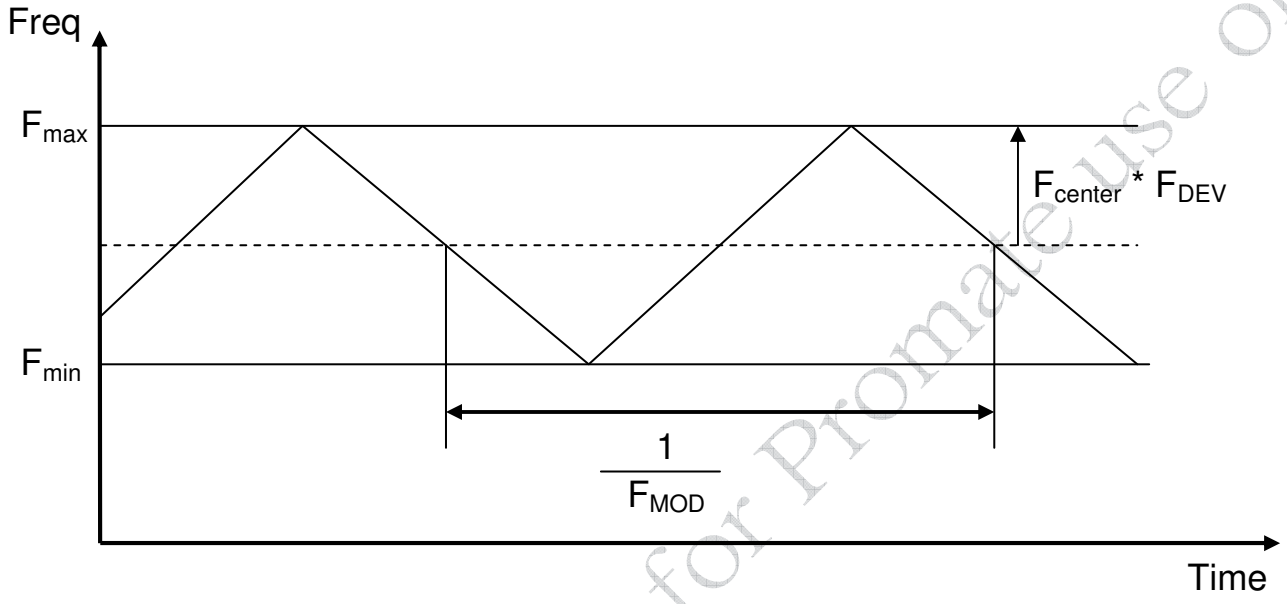

< Spread Spectrum>

5.2 Backlight Unit

Parameter guideline for LED driving is under stable conditions at 25 ℃ (Room Temperature):

Symbol	Description	Min.	Typ.	Max.	Unit	Note
IRLED	LED Operation Current	-	**115**	-	[mA]	***Note 1***
VLB	Light Bar Operation Voltage	-	**14.08**	-	[Volt]	***Note 2***
PBLU	BLU Power Consumption	-	**38.86**	-	[Watt]	
LTLED	LED Life Time	**30,000**	-	-	[Hour]	***Note 3***

Each module consists of **96 pcs LED (8 light bars)**

<light bars drawing>

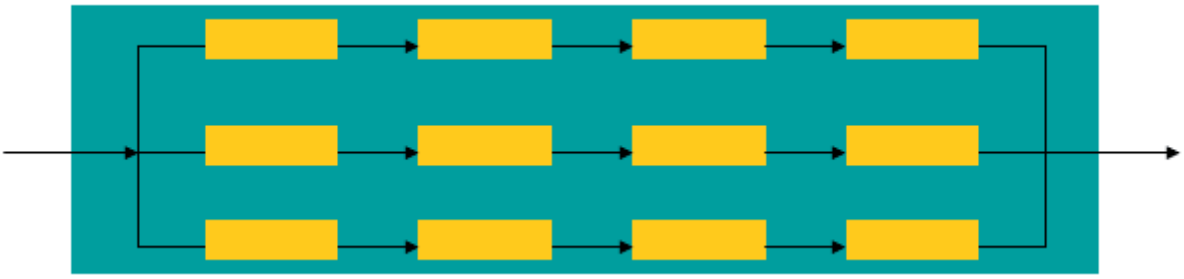

Note 1: The specified current is 100% duty of LED chip input current

Note 2: The value showed is one string operation voltage.

Note 3: Definition of life time: Brightness becomes to 50% of its original value. The minimum life time of LED unit is on the condition of IRLED = 115 mA and 25±2℃ (Room Temperature).

6 Signal Characteristics

6.1 Pixel Format Definition

Following figure shows the relationship between the input signals and LCD pixel format.

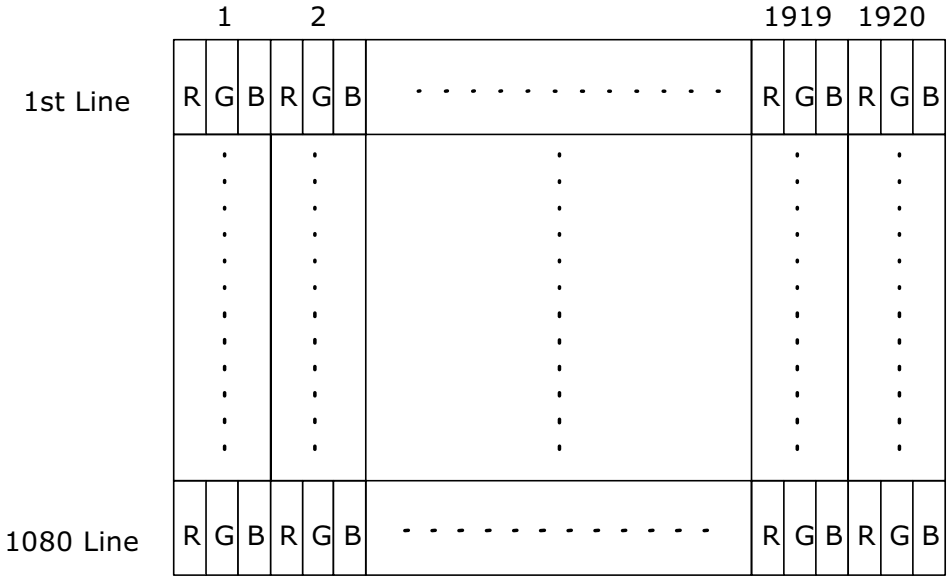

6.2 Input Data Format Definition

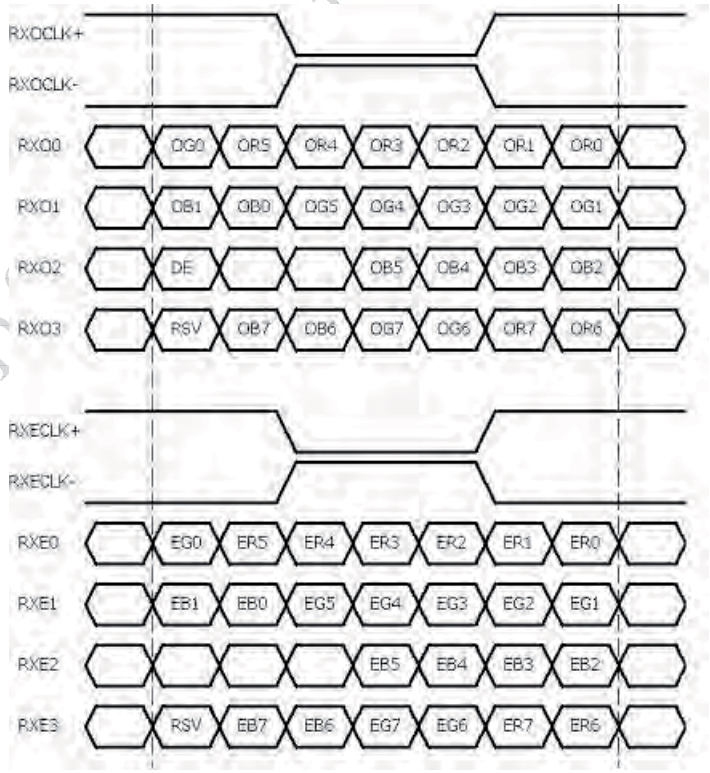

Note 1: R/G/B data 7:MSB, R/G/B data 0:LSB O = “Odd Pixel Data” E = “Even Pixel Data”

6.3 Signal Description

PIN #	SIGNAL NAME	DESCRIPTION
1	RxO0-	Negative LVDS differential data input (Odd data)
2	RxO0+	Positive LVDS differential data input (Odd data)
3	RxO1-	Negative LVDS differential data input (Odd data)
4	RxO1+	Positive LVDS differential data input (Odd data)
5	RxO2-	Negative LVDS differential data input (Odd data,DSPTMG)
6	RxO2+	Positive LVDS differential data input (Odd data,DSPTMG)
7	GND	Power Ground
8	RxOCLK-	Negative LVDS differential clock input (Odd clock)
9	RxOCLK+	Positive LVDS differential clock input (Odd clock)
10	RxO3-	Negative LVDS differential data input (Odd data)
11	RxO3+	Positive LVDS differential data input (Odd data)
12	RxE0-	Negative LVDS differential data input (Even data)
13	RxE0+	Positive LVDS differential data input (Even data)
14	GND	Power Ground
15	RxE1-	Negative LVDS differential data input (Even data)
16	RxE1+	Positive LVDS differential data input (Even data)
17	GND	Power Ground
18	RxE2-	Negative LVDS differential data input (Even data)
19	RxE2+	Positive LVDS differential data input (Even data)
20	RxECLK-	Negative LVDS differential clock input (Even clock)
21	RxECLK+	Positive LVDS differential clock input (Even clock)
22	RxE3-	Negative LVDS differential data input (Even data)
23	RxE3+	Positive LVDS differential data input (Even data)
24	GND	Power Ground
25	NC	No connection (for AUO test only. Do not connect)
26	NC	No connection (for AUO test only. Do not connect)
27	NC	No connection (for AUO test only. Do not connect)
28	VDD	Power +5V
29	VDD	Power +5V
30	VDD	Power +5V

Note 1: Input signals of odd and even clock shall be the same timing.

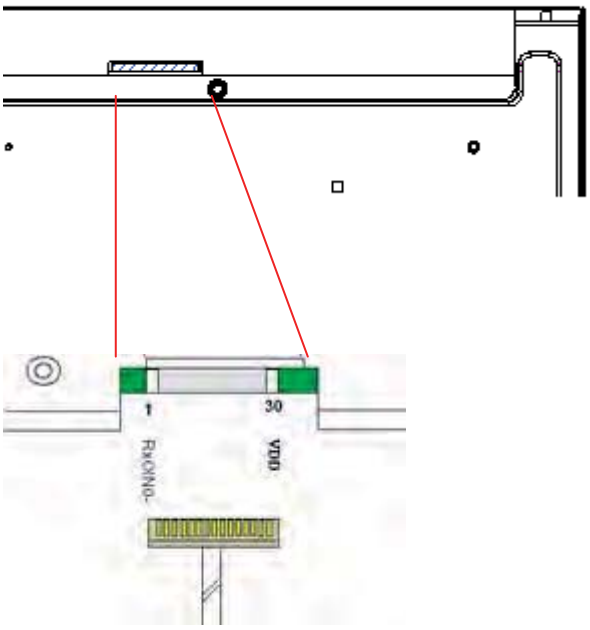

6.4 Interface Timing

6.4.1 Timing Characteristics

Signal	Item	Symbol	Min	Typ	Max	Unit
Clock	Frequency	1/ T_{Clock}	54.8	71.2	90	MHz
Frame Rate	Frequency	1/Tv	50	60	76	Hz
Vertical Section	Period	T_V	1092	1130	1793	T_line
	Active	T_{VD}	1080	1080	1080	
	Blanking	T_{VB}	12	50	713	
Horizontal Section	Period	T_H	1004	1050	1100	T_clock
	Active	T_{HD}	960	960	960	
	Blanking	T_{HB}	44	90	140	

Note: DE mode only.

6.4.2 Input Timing Diagram

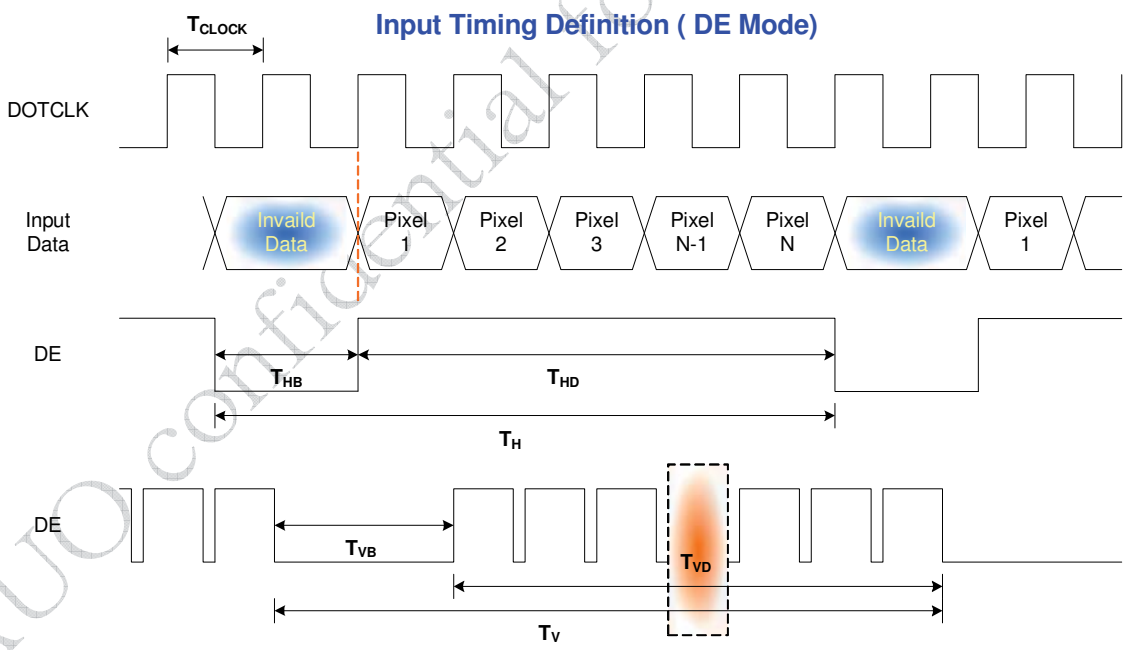

6.5 Power ON/OFF Sequence

VDD power and lamp on/off sequence are as follows. Interface signals are also shown in the chart. Signals from any system shall be Hi-Z state when VDD is off.

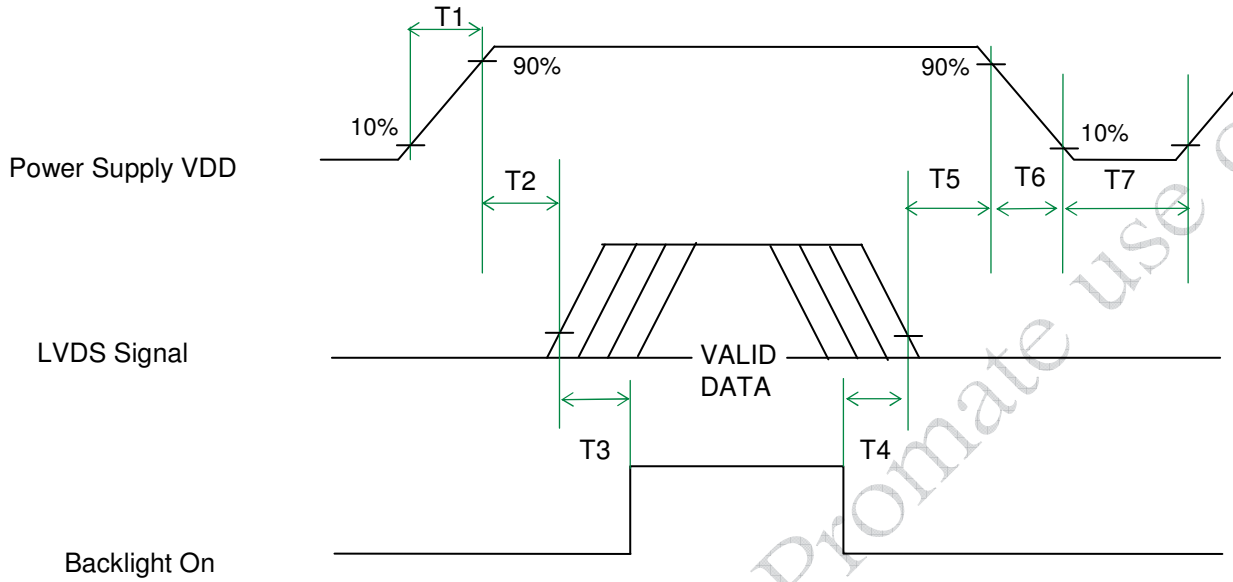

Power Sequence Timing

Parameter	Value			Unit
	Min.	Typ.	Max.	
T1	0.5	-	10	[ms]
T2	0	-	50	[ms]
T3	500	-	-	[ms]
T4	100	-	-	[ms]
T5	0	-	50	[ms] *Note1,2*
T6	5	-	100	[ms] *Note1,2*
T7	1000	-	-	[ms]

Note1 : Recommend setting T5 = 0ms to avoid electronic noise when VDD is off.

Note2 : During T5 and T6 period , please keep the level of input LVDS signals with Hi-Z state.

7 Connector and Pin Assignment

Physical interface is described as for the connector on module. These connectors are capable of accommodating the following signals and will be following components.

7.1 TFT LCD Module

Connector Name / Designation	Interface Connector / Interface Card
Manufacturer	SIN SHENG, P-TWO or compatible
Type Part Number	MSCKT2407P30HB, AL230F-A0G1D-P or compatible
Mating Housing Part Number	FI-X30HL (Locked Type)

7.1.1 Pin Assignment

Pin#	Signal Name	Pin#	Signal Name
1	RxO0-	2	RxO0+
3	RxO1-	4	RxO1+
5	RxO2-	6	RxO2+
7	GND	8	RxOCLKIN-
9	RxOCLKIN+	10	RxO3-
11	RxO3+	12	RxE0-
13	RxE0+	14	GND
15	RxE1-	16	RxE1+
17	GND	18	RxE2-
19	RxE2+	20	RxECLKIN-
21	RxECLKIN+	22	RxE3-
23	RxE3+	24	GND
25	NC (for AUO test only. Do not connect)	26	NC (for AUO test only. Do not connect)
27	NC (for AUO test only. Do not connect)	28	VDD
29	VDD	30	VDD

7.2 LED Connector on Backlight Unit

Connector Name / Designation	Light Bar Connector
Manufacturer	CviLux or compatible
Type Part Number	CI1412SL00-NH or compatible

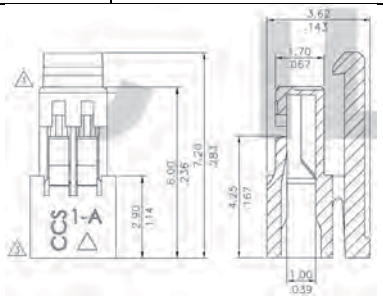

<Reference Drawing of LED connector>

7.2.1 LED Pin assignment

Pin#	Signal Name
1	VLB (+14.08V)
2	Ground

7.2.2 LED Mating housing dimension

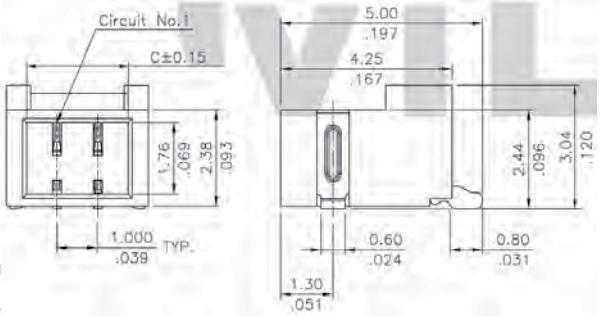

<Reference Drawing of LED Mating Housing>

8 Reliability Test

Environment test conditions are listed as following table.

Items	Required Condition	Note
Temperature Humidity Bias (THB)	Ta= 50℃, 80%RH, 300 hours	
High Temperature Operation (HTO)	Ta= 50℃, 50%RH, 300 hours	
Low Temperature Operation (LTO)	Ta= 0℃, 300 hours	
High Temperature Storage (HTS)	Ta= 60℃, 300 hours	
Low Temperature Storage (LTS)	Ta= -20℃, 300 hours	
Vibration Test (Non-operation)	Acceleration: 1.5 Grms Wave: Random Frequency: 10 - 200 Hz Duration: 30 Minutes each Axis (X, Y, Z)	
Shock Test (Non-operation)	Acceleration: 50 G Wave: Half-sine Active Time: 20 ms Direction: ±X, ±Y, ±Z (one time for each Axis)	
Drop Test	Height: 46 cm, package test	
Thermal Shock Test (TST)	-20℃/30min, 60℃/30min, 100 cycles	***Note 1***
On/Off Test	On/10sec, Off/10sec, 30,000 cycles	
ESD (Electro Static Discharge)	Contact Discharge: ± 8KV, 150pF(330Ω) 1sec, 15 points, 25 times/ point	***Note 2***
	Air Discharge: ± 15KV, 150pF(330Ω) 1sec 15 points, 25 times/ point	
Altitude Test	Operation: 18,000 ft Non-Operation: 40,000 ft	

Note 1: The TFT-LCD module will not sustain damage after being subjected to 100 cycles of rapid temperature change. A cycle of rapid temperature change consists of varying the temperature from -20℃ to 60℃, and back again. Power is not applied during the test. After temperature cycling, the unit is placed in normal room ambient for at least 4 hours before power on.

Note 2: EN61000-4-2, ESD class B: Certain performance degradation allowed:

- No data lost
- Self-recoverable
- No hardware failures

9 Shipping Label

TBD

10 Mechanical Characteristics

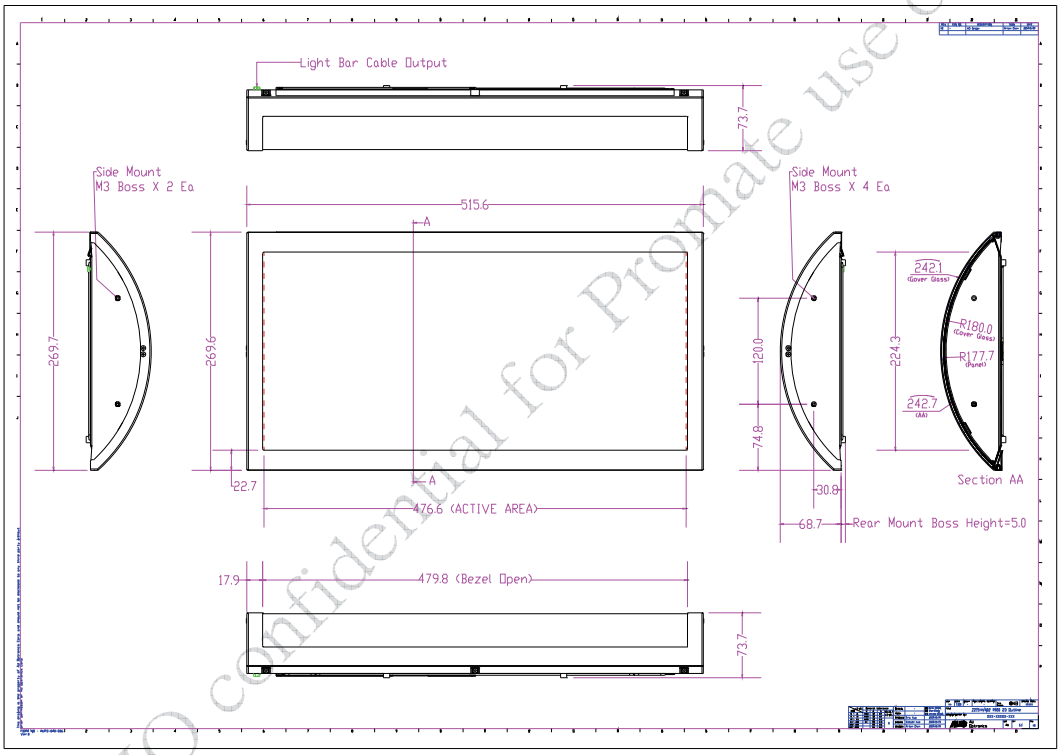

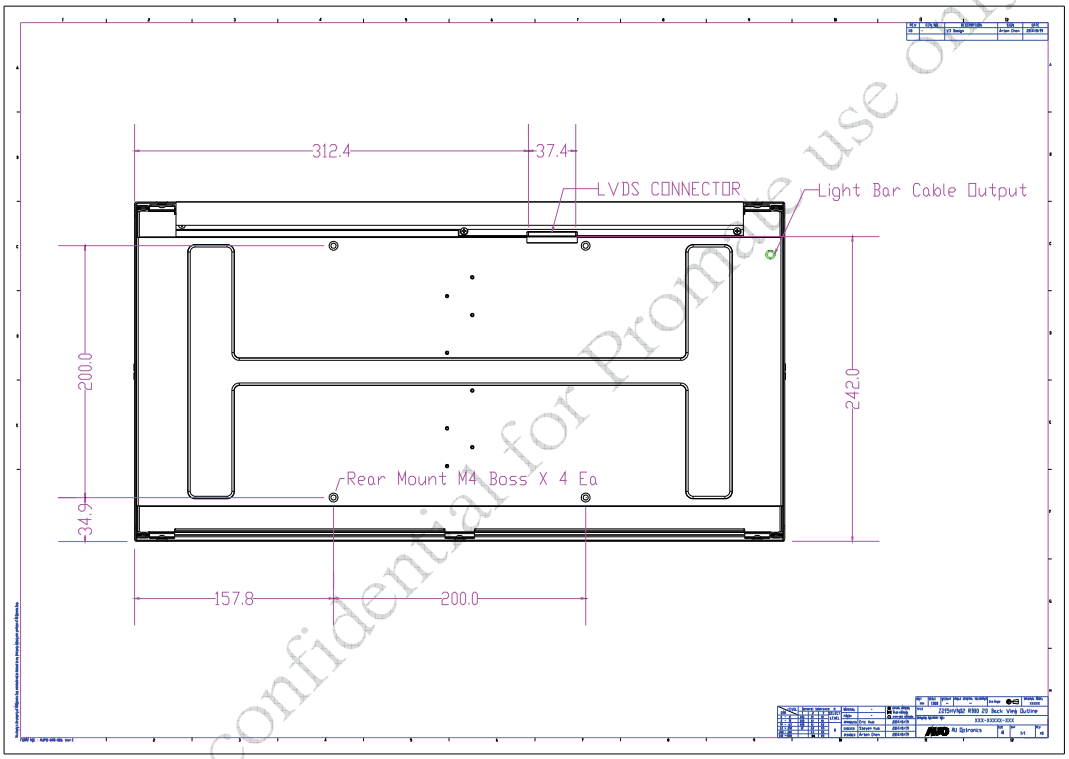

11 Packing Specification

- Carton Box: 466(L) x403(W) x647(H) mm
- Weight: 9.5kg/ per carton
- Capacity: 3pcs/ per carton