ISSUE Mar. 13.2002

Specifications for

TFT -LCD Monitor

△A

MODEL: COM35T3112DTR

APPROVED BY

CASIO

CASIO ELECTRONIC DEVICE CO., LTD.
4-F Tachikawa-center-bldg., 2-22-20 Akebono-cho
Tachikwa-city,Tokyo 190-0012, Japan
TEL 81-42-527-6365
FAX 81-42527-6332

CASIO COMPUTER CO., LTD.
Device Division
2951-5 Ishikawa-cho, Hachioji-city, Tokyo 192-8556,Japan
TEL 81-426-45-5917
FAX 81-426-45-5275

Presented by

APPROVED

CHECKED

TECHNICAL DEPT. MANAGER

Ichiro Ohno

DESIGNED

O. Kimura

CASIO COMPUTER CO.,LTD.	SPECIFICATIONS No.	01TLM274

REVISIONS

DATE	PAGE		CONTENTS		
Mar.13,2002	△A ×7				
	9	revision	Peripheral Circuit Diagram	RB→VBC	Clerical error correction
	26	revision	Measuring points	23.3——→11.7	Clerical error correction
	28	revision	Casio's original inverter circuit	15k ohm→15 ohm	Clerical error correction

CONTENTS

1.	APPLICATIONS	.....	4
2.	GENERAL SPECIFICATIONS	.....	5
3.	DIMENSIONS AND OUTWARD FORM		
	3.1 DIMENSIONS	.....	5
	3.2 OUTWARD FORM	.....	6
	3.3 SERIAL LABEL(S LABEL)	.....	7
4.	INTERFACE TERMINALS ASSIGNMENT	.....	8
5.	ABSOLUTE MAXIMUM RATINGS	.....	9
6.	RECOMMENDED OPERATING CONDITIONS	.....	11
7.	CHARACTERISTICS		
	7.1 ELECTRICAL CHARACTERISTICS	.....	12
	7.2 CIRCUIT BLOCK DIAGRAM	.....	13
	7.3 AC ELECTRICAL CHARACTERISTICS AND INPUT SIGNAL TIMING CHART	.....	14
	7.4 OPTICAL CHARACTERISTICS	.....	16
	7.5 TEMPERATURE CHARACTERISTICS	.....	17
	7.6 SERVICE LIFE OF BACK LIGHT	.....	17
8.	CRITERIA		
	8.1 DISPLAY APPEARANCE SPECIFICATIONS	.....	18
	8.2 APPEARANCE CRITERIA	.....	19
9.	RELIABILITY	.....	20
10.	PACKING SPECIFICATIONS	.....	22
11.	HANDLING PRECAUTIONS	.....	23
APPENDIX		.....	26

1.APPLICATION

These specifications apply to 8.8cm(3.5") TFT-LCD module products, which are intended for civilian use, that are supplied to CESSCOM CORPORATION(the purchaser hereinafter) is refered to "CESSCOM") by CASIO COMPUTER CO.,LTD.(the seller, herein after is refered to "CASIO")

○ As to the use of these products, and/or the use of the information and/or the drawings in these specifications, CASIO shall not guarantee or grant CESSCOM to use or exercise an industrial right, intellectual property, or any other rights of a third party Therefore CASIO shall not be liable to infringement of right of a third party by CESSCOM arising from the use of the products.

○ If these products will be used in an application where a higher level of reliability and safety is needed,in terms of function and accuracy, such as transportation equipment (aircraft,train,automobile, etc.), disaster-prevention, security equipment, or various safety equipment, CESSCOM shall contact CASIO for technical assistance in advance.

○ These products shall not be used in critical application that requires the highest level of reliability and safety, such as aerospace equipment, main lines of telecommunications equipment, control equipment for nuclear plants, or medical life-support equipment.

○ CASIO shall not be liable for any damage arising from the misuse, abuse, and/or miss-operation of these products that do not meet with the operating conditions and precautions described in these specifications.

○ If any issues arise as to the information provided in these specifications or any other information, CASIO will discuss them with CESSCOM in good faith and try to seek solutions or improvements.

2. GENERAL SPECIFICATIONS

Item	Specification	Remarks
Display type	TN type 262,144 Colors transmissive mode Normally white	
Driving method	a-Si TFT Active matrix Line-scanning, Non-interlace	
Dot arrangement	RGB stripe arrangement	Refer to figure 1
Input signal type	Digital RGB 6-bit parallel	
Touch panel	Transparent resistive layer analog tablet	
Back light	Side back light LED	
Viewing direction	Upward (12 o'clock)	

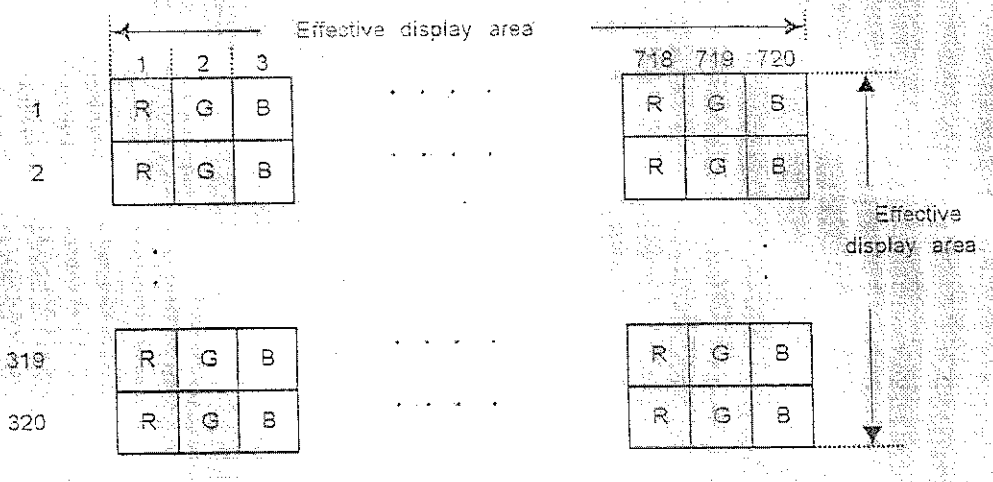

Figure 1 Dot arrangement(with CASIO logo located to the bottom)

3. DIMENSIONS AND OUTWARD FORM

3.1 DIMENSIONS

Item		Specification	Unit	Remarks
Monitor outline dimensions	Outer form	67.9(H)×84.5(V)×5.2(D)	mm	Refer to 3.2 outwards form
Effective display area		52.6(H)×70.1(V)	mm	Diagonal:8.8cm
Effective touch panel area		54.66(H)×72.18(V)	mm	
Number of dots		720(H)×320(V)	Dot	
Dot pitch		73(H)×219(V)	um	
A load of touch panel surface		0.049～0.49	N	0.8R、 Poly Asetal PEN
Hardness of touch panel surface		3	H	JIS-K5400
Weight		57	g	

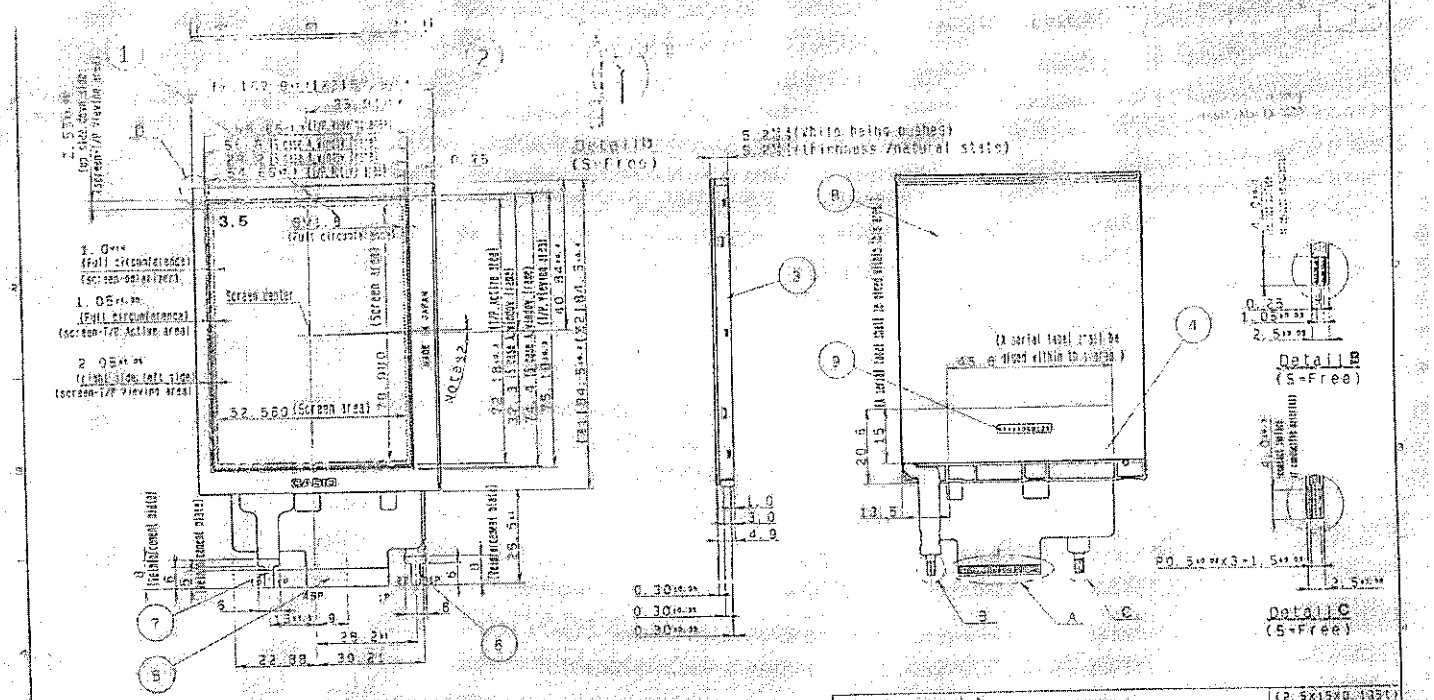

1. #1 of the monitor's outer dimension indicates the dimension of frame's corner.
   #2 of the monitor's outer dimension indicates the outer dimension of S case.
2. The maximum allowable angular misalignment of LCD panel is 120° relative to the module reference axis.
3. The total thickness of the monitor refers to the height of its rear face when its front face is placed on a flat surface.
4. The area marked with [illegible] is [illegible] (black mask).
5. A serial label is attached on the position shown in the above figure. The thickness of the serial label will be added to that of S case's surface.
6. The recommended standard cable connector is indicated as follows.
   Manufacture: LCD: molex Part Number: 54104-4530
   T/P: molex Part Number: 54550-3417
   LED: molex Part Number: 54550-3417
7. A protection film shall be attached on the surface of the T/P in a position that covers the whole viewing area of the T/P.

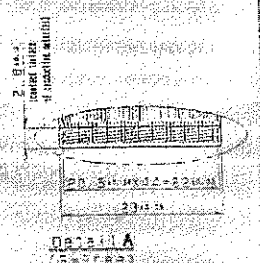

Title	Part No.	Spec/No.	Standard	Material	Remarks
S label	9				(2.5x15x0.135t)
R case	9			SUS+Ag film t=0.24	
Cable C	7				Use of Touch-Panel
Cable B	5				Use of LED
Cable A	5				Use of LCD
Frame	4			PC	
S case A	3			SPTE+RET t=0.33	[illegible]
Touch-Panel	2				Clear Type/NonAR
LCD	1			Glass substrate thickness=0.11	

Approved by: Ohno
Sawatsubaki
General Tolerance: 50.5
Scale: 1/1
Issue: 01-03-01
Machine Type: CX-3112
Drawing check by: Kato
Designed by: Kato
Drawn by: Kato
Specification of [illegible] monitor [illegible] timing of S

CASIO
CASIO COMPUTER CO., LTD.
[illegible]
Drawing No.: RJC500893D301

Figure 2 Outward form

3.3 S[illegible]

1) [illegible]

[illegible]

* Content of Characters

a b c d

	Content of Characters			
a	The unit's place of the year			
b	Production Lot (month)	Jan.-A Feb.-B Mar.-C Apr.-D	May.-E Jun.-F July.-G Aug.-H	Sept.-I Oct.-J Nov.-K Dec.-L
c	Model code	35QR		
d	Serial Number			

* Example of S-label
  - In case of COM35T3112DTR

1H35 QR 000125

means August 2001, 3.5"Qtype,R version No.125

2) S-label location

Refer to Subsection 3.2,OUTWARD FORM.

4.INTERFACE TERMINALS ASSIGNMENT

MODULE

No	Terminal name	Function	Remarks	I/O
1	VSS	GND		
2	VGH	Gate driving positive power supply		
3	VGL	Gate driving negative power supply	Auto-generated from internal charge pump of gate driver	
4	VDD	Gate logic power supply		
5	C1-	Capacitor terminal 1 for Charge pump	Between C1+ and C1-, 1.0uF capacitor needed	
6	C1+	Capacitor terminal 2 for Charge pump		
7	CP	Clock signal for charge pump	duty 50% pulse	I
8	GSRT-D	Gate start signal (bottom driver)		I
9	GSRT-U	Gate start signal (top driver)		I
10	GRES	Gate driver output control signal		I
11	GPCK	Gate shift clock		I
12	STHR	Sampling Start signal IN/OUT	RIT=Lo: Out pin, RIT=Hi: start signal IN	I/O
13	CLK	Source driver clock IN		I
14	STB	Source driver control signal	Data latch when STB raise/up	I
15	OE		Note1	I
16	RIT	Right&Left reversal control signal	Lo: Normal display mode, Hi: Right&Left reversal display mode	I
17	POL	Polarity reversal switch signal IN	Per each 1 line and also 1 field, polarity to be reversed.	I
18	D00	Signal display data IN (B)	Start when CLK raise/up 00H : Black display D00/D10/D20:LSB D05/D15/D25:MSB Serial data to be input with D00:D05	I
19	D01			I
20	D02			I
21	D03			I
22	D04			I
23	D05			I
24	D10	Signal display data IN (G)	Serial data to be connected to GND	I
25	D11			I
26	D12			I
27	D13			I
28	D14			I
29	D15			I
30	D20	Signal display data IN (R)		I
31	D21			I
32	D22			I
33	D23			I
34	D24			I
35	D25			I
36	SER	Data Serial/Parallel Input switch	Lo:Parallel data, Hi:Serial data	I
37	VBC	Source driver output current control	To be connected to GND through 180Kohm resistor	I
38	VA	Source driver output level input		I
39	VB			I
40	VSS	GND		
41	VDD	Source logic power supply		
42	VSH	Source driver positive power supply		
43	STHL	Sampling start signal IN/OUT	RIT=Lo: start signal IN, RIT=Hi: Out pin	I/O
44	VCOM	Common electrode driving signal		
45	VCOM			

*Note 1 Connect to Lo (GND)

LED Back Light

No	Symbol	Function	Remarks	I/O
1	BLL	LED power supply (Cathode side)		
2	BLH	LED power supply (Anode side)		

Touch Panel

No	Symbol	Function	Remarks	I/O
1	YU	Y-axis upper terminal		I/O
2	XR	X-axis right terminal		I/O
3	YD	Y-axis lower terminal		I/O
4	XL	X-axis left terminal		I/O

Note) Peripheral Circuit Diagram

Case 1. : Use of charge pump

Di: Shot key diode (Matsusita MA729)

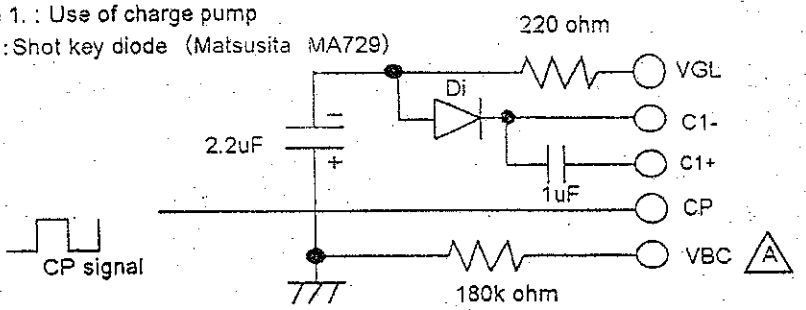

Case 2. : VGL impressed from out

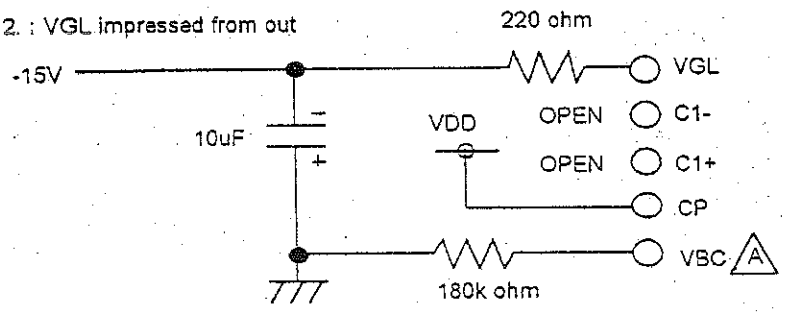

5. ABSOLUTE MAXIMUM RATINGS

VSS=0V

Item	Symbol	Condition	Rating MIN	Rating MAX	Unit	Applicable terminal
Source/gate Driver logic Power voltage	VDD	Ta=25° C	-0.3	6.0	V	VDD
Source driver Power voltage	VSH		-0.3	6.0	V	VSH
Gate driver Power voltage	VGH		VDD-0.6	VGL+36	V	VGH
	VGL		VGH-36	0.6	V	VGL
Gamma Power supply voltage	VA/VB		-0.3	VSH+0.3	V	VA, VB
Logic Input voltage	VI		-0.3	VDD+0.3	V	CP,GSRT-D,GSRT-U GRES,GPCK,STHL,STHR CLK,OE,RIT,POL,SER,STB D00:D05,D10:D15,D20:D25
Common electrode voltage	Vcom		-6.0	10.0	V	VCOM
			-	12.0	VDD	
Touch Panel input voltage	VIT		-	7.0	V	XL,XR,YU,YD
Touch Panel endurance	VET		-	DC25V 1min	-	XL,XR-YU,YD
LED forward current	IF		-	20	mA	BLH-BLL
Storage temp. Range	Tstg		-20	70	°C	

Note) Set up the turn-on&turn-off signal input sequence, referring to the chart in the next page.

SUPPLY VOLTAGE SEQUENCE

Apply the power supply and the signal input, according to the following conditions.

Apply the logic signal after the logic power supply VDD is applied.
Apply the gamma voltage (VA,VB) after the source driver power supply VSH is applied.
Apply the source driver power supply VSH after or on the same timing that the logic power VDD is applied.
Apply the gate driver positive power supply VGH before or on the same timing that the logic power VDD and the negative power VGL are applied.
Before the gate driver receives the logic signal and the internal circuit starts operating, fix the gate driver negative power supply VGL at certain voltage.
Do not make the VGL in a floating mode while the internal circuit is operating.
In case of using the VGH single power supply (using a charge pump), it is not required to study for the sequence because the VGL is generated in the module.

When turning off the power, the sequence shall be applied conversely.

A recommended sequence is as follows.

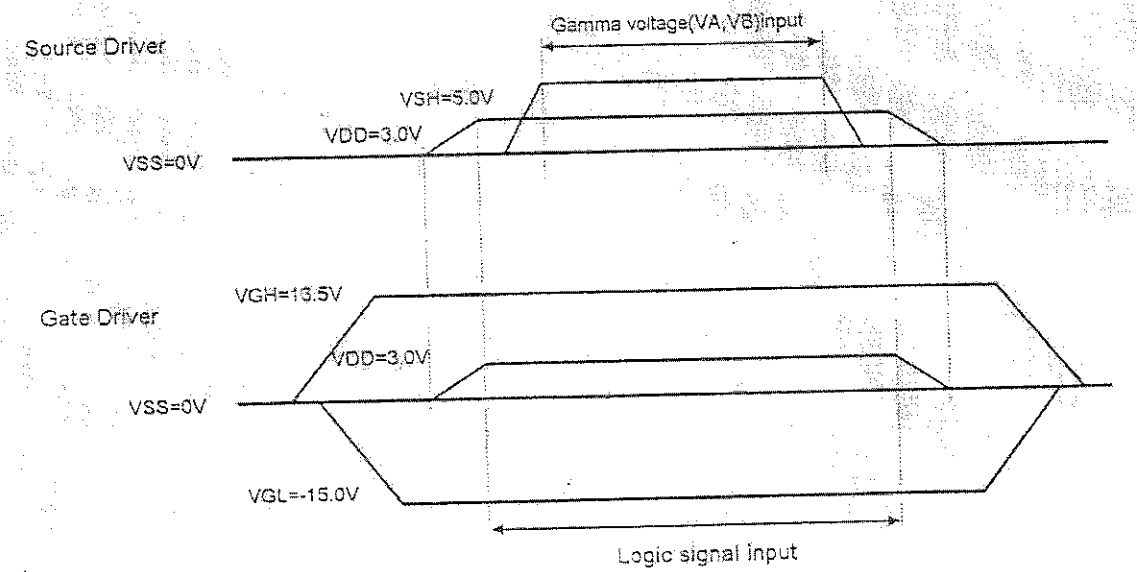

6.RECOMMENDED OPERATING CONDITIONS

VSS=0V

Item		Symbol	Condition	Rating MIN	Rating TYP	Rating MAX	Unit	Applicable terminal
Logic power voltage		VDD		2.7	3.0	3.6	V	VDD
Source driver power		VSH		4.5	5.0	5.5	V	VSH
Gate driver power voltage		VGH1	Use charge pump	14.0	15.0	16.0	V	VGH
		VGH2	VGL applied externally	12.5	13.5	14.5	V	
		VGL		-16.0	-15.0	-14.0	V	VGL
Gamma Power supply voltage	Input range	VA/VB	VB>VA	0.5	-	VSH -0.5	V	VA,VB
	Center voltage Note1	Vsig/c		-	(1/2)× VSH	-	V	
Common Electrode signal	Amplitude	Vcompp	(VA+VB) /2=2.5V	0	6.0	7.5	Vpp	VCOM
	Center voltage Note2	Vcom /c		1.1	1.6	2.1	V	
Resistance for bias current control		RBCNT		170	180	190	k ohm	VBC
Operating temp. range		Top		-10	+25	60	°C	at touch panel surface

Note1:The Gamma power supply center voltage must be set at (1/2) ×VSH.

Note2:Regarding the Center Voltage of the Common Electrode signal, the specified range of Vcom simply means that an optimum value exists within the range,and does not mean that the whole range of specified voltage is the optimum value of Vcom center voltage.
Use this monitor with adjusting the Vcom center voltage to an optimum value.

7.CHARACTERISTICS

7.1 ELECTRICAL CHARACTERISTICS

7.1.1 MODULE

Ta=25°C

Item	Symbol	Condition		Rating MIN.	Rating TYP.	Rating MAX.	Unit	Applicable terminal
Input signal voltage	VIH			0.7VDD	-	VDD	V	D00:D05,D10:D15 D20:D25,CLK STHL,STHR,STB OE,RIT,POL,SER CP,GRES,GPCK GSRT-U,GSRT-D
	VIL			0	-	0.3VDD	V	
Power current	IDD	VDD=3.0V		-	0.35	0.7	mA	VDD
	ISH	VSH=5.0V		-	2.8	5.6	mA	VSH
	IGH1	Vcompp =6.0V VB-VA=3.0V	Use single power supply VGH=15.0V	-	0.84	1.68	mA	VGH
	IGH2	Color bar display	applied VGH=13.5V	-	0.46	0.92	mA	VGH
	IGL		VGL=-15.0V	-0.66	-0.33	-	mA	VGL

VSS=0V,RBCNT=180k ohm

7.1.2 BACK LIGHT

Ta=25°C

Item	Symbol	Condition	Rating MIN.	Rating TYP.	Rating MAX.	Unit	Remarks
Forward Current	IL		-	15.0	20.0	mA	BLH-BLL
Forward Voltage	VL	IL=15.0mA	-	18.6	20.0	V	

7.1.3 TOUCH Panel

Ta=25°C

Item	Symbol	Condition	Rating MIN.	Rating TYP.	Rating MAX.	Unit	Remarks
Linearity	LE		-	-	±1.5	%	
Insulated resistance	RI	DC25V	20	-	-	M ohm	XL,XR-YU,YD

7.2 CIRCUIT BLOCK DIAGRAM

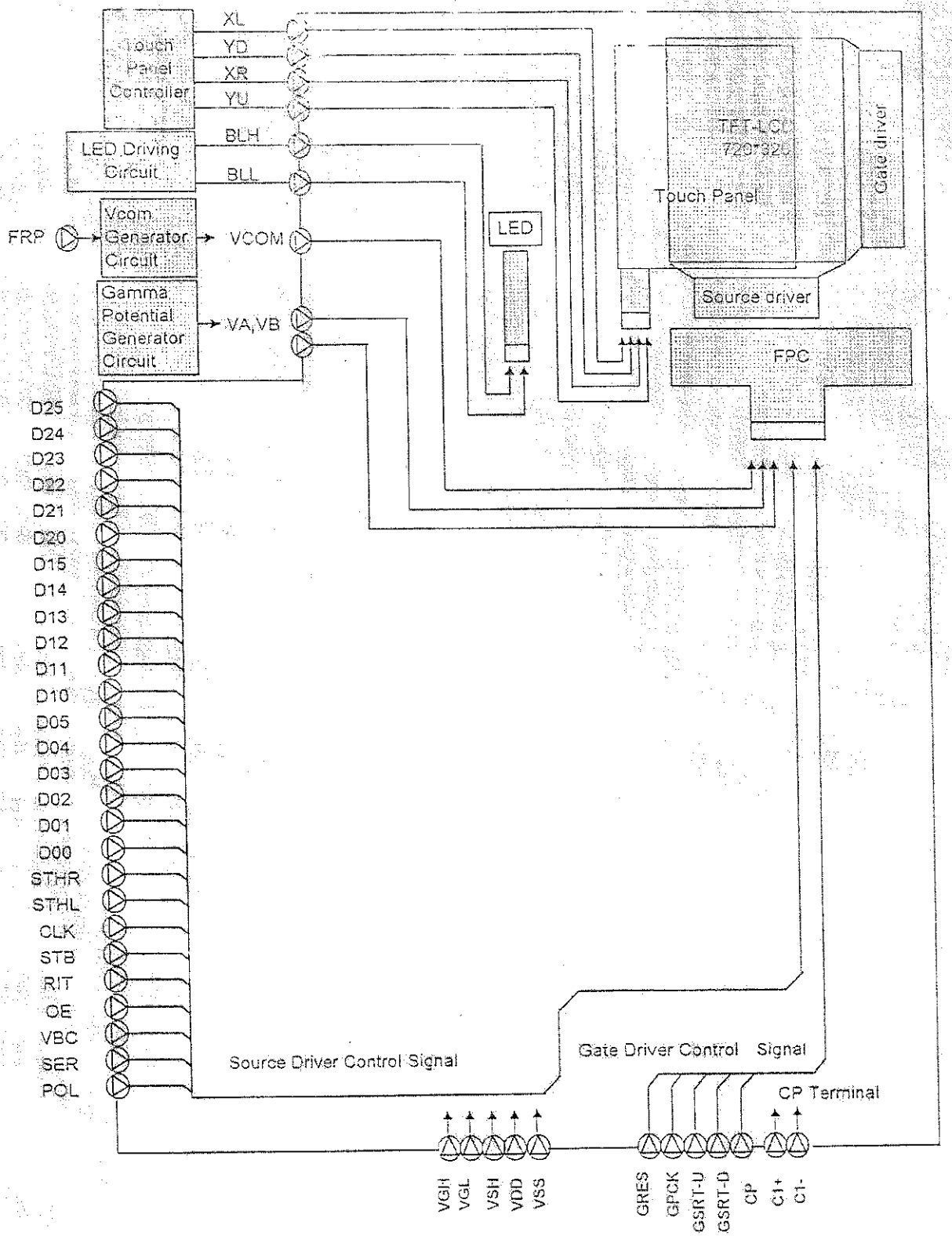

7.3 AC ELECTRICAL CHARACTERISTICS AND INPUT SIGNAL TIMING CHART

VGH=15.0V,VSH=5.0V,VDD=3.0V,VSS=0V

Item	Symbol	Conditions	Timing			Unit	Applicable Pin	
			MIN.	TYP.	MAX.			
Signal rise time	tr	10% to 90%			5	ns		
Signal fall time	tf	90% to 10%			5	ns		
Clock Freq.	fCLK		4.44	4.80	5.42	MHz	CLK	
Clock Low duration	TwCL		20			ns	CLK	
Clock High duration	TwCH		20			ns	CLK	
Start pulse signal interval	Tst			256		CLK	STHR,STHL	
Start pulse setup time	tsp1		10			ns	STHR,STHL,CLK	
Start pulse hold time	thd1		10			ns	STHR,STHL,CLK	
Start pulse rise time	tSPR1			240		CLK	STHL,STHR	
Date invalid duration	tinv		-	1	-	CLK	D00:D05	STHL/R
Data setup time	tsp2		10			ns	D10:D15	CLK
Data hold time	thd2		10			ns	D20:D25	CLK
STB setup time	tsp3		2	2		CLK	STB,CLK	
CLK-STB Interval	tCLK-STB	CLK↑-> STB↑ or↓	10			ns	STB,CLK	
STB-CLK interval	tSTB-CLK	STB↑ or↓-> CLK↑	10			ns	STB,CLK	
Gate start pulse freq.	fGSRT		54.0	58.4	66.0	Hz	GSRT	
Gate clock freq.	fGPCK		17.3	18.75	21.2	KHz	GPCK	
GPCK pulse width	tw5H		10.0	10.6		uS	GPCK	
GSRT setup time	tsp4		5.0	5.5		uS	GSRT,GPCK	
GSRT hold time	thd4		5.0	47.8		uS	GSRT,GPCK	
GSRT pulse width	tw4H		20.0us	1H	1H	-	GSRT	
GPCK setup time	tsp5		5.0	5.1		uS	GPCK,GSRT	
GPCK hold time	thd5		5.0	5.5		uS	GPCK,GSRT	
CP clock Freq.	fCP	Duty 50%	4.0	4.69	6.0	KHz	CP	

Note : The typ value means the one when MediaQ's controller MQ-1100/1132 is used.
GSRT=GSRT-U & GSRT-D

Switching characteristics waveform (RIT=L)) : RIT=Hi

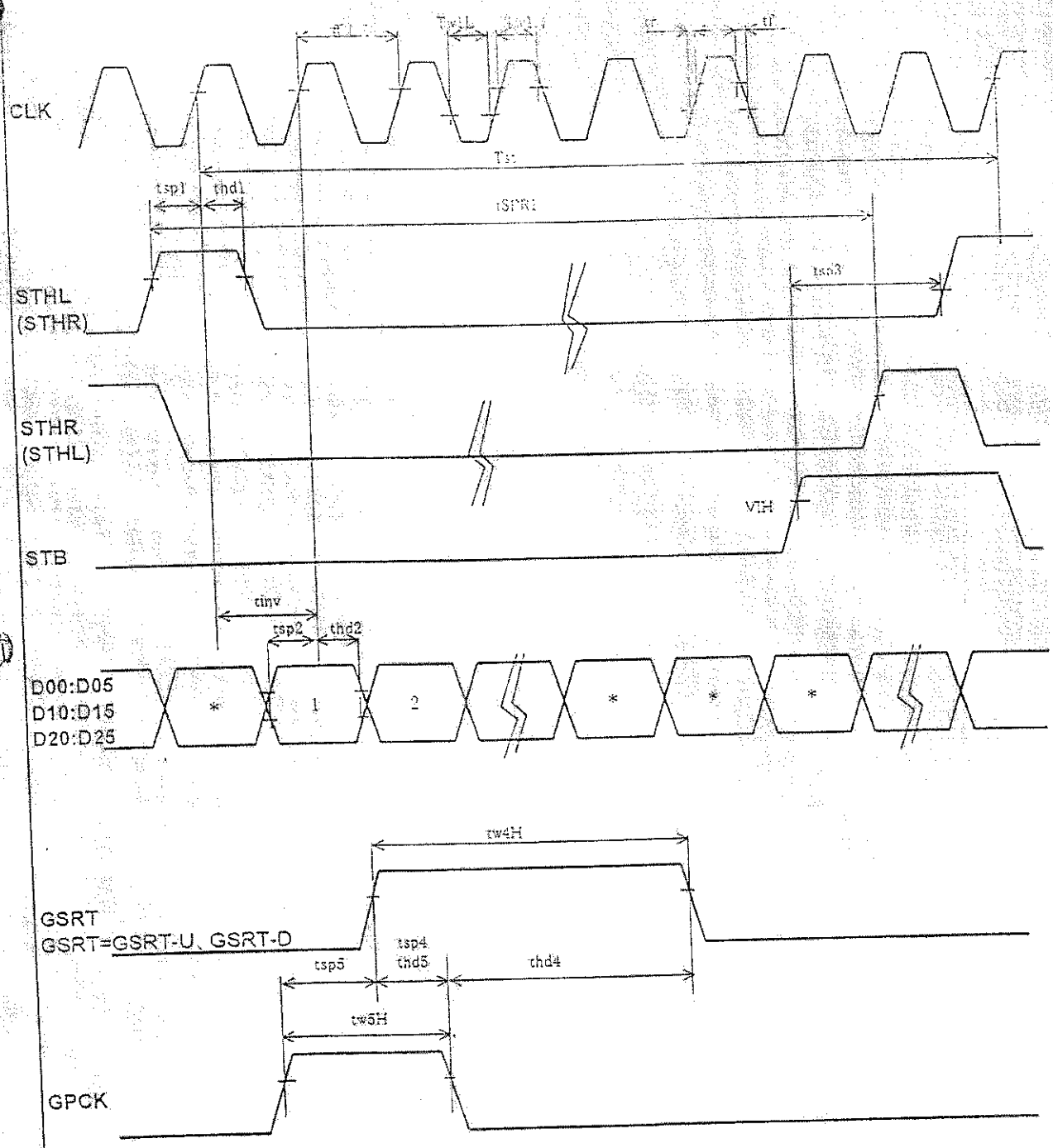

CASIO COMPUTER CO.,LTD.	SPECIFICATIONS No.	01TLM274
	SPECIFICATIONS No.	P3112

7.4 OPTICAL CHARACTERISTICS

Measure condition

Measuring equipment CS1000(Minolta),LCD7000(Otsuka Electronics),U3410(Hitachi)

Driving conditions VGH=15.0V,VDD=3.0V,VFH=5.0V,VSS=0V,RSCNT=180Kohm

Vcom/Cis adjusted to an optimum value

VLCD=(Vsigpp±Vcompp)/2

Back light IL=15mA,Vin=5.0V

Use Casio's measuring circuit.(refer to the appendix.)

Measuring temperature Ta=25°C

Item		Symbol	Condition	MIN	TYP	MAX	Unit	Note #	Remarks
Response time	Rise time	TON	VLCD= 1V→5V	-	-	40	ms	1	*
	Fall time	TOFF	VLCD= 1V→5V	-	-	60	ms		
Contrast ratio		CR	VLCD= 1V→5V	60	-	-		2	
Viewing angle	Left	θL	VLCD= 1V→5V	50	-	-	deg	3	*
	Right	θR		50	-	-	deg		
	Up	φU	CR≧5	60	-	-	deg		
	Down	φD		20	-	-	deg		
V-T Threshold voltage		V90		1.5	1.8	2.1	V	4	*
		V50		2.0	2.3	2.6	V		
		V10		2.7	3.0	3.3	V		
White V-T characteristic				See figure 3.					Reference
White chromaticity		x	VLCD=1V	0.26	0.325	0.41		5	
		y		0.25	0.352	0.46			
Maximum contrast angle		CR φ		-5	2	10	deg	6	Upward *
Reflectance				-	-	2.5	%	7	*
Image sticking				No image sticking shall remain after displaying the window pattern for 2 hours				8	
Center brightness			VLCD=1V	70	100	-	cd/m2	9	
Brightness distribution			VLCD=1V	60	-	-	%	10	

Note) Note1-10 Refer to the Appendix A"Standed measurement method of optical characteristics for TFT-LCD monitors".

Note) * The value are meansured in module states.

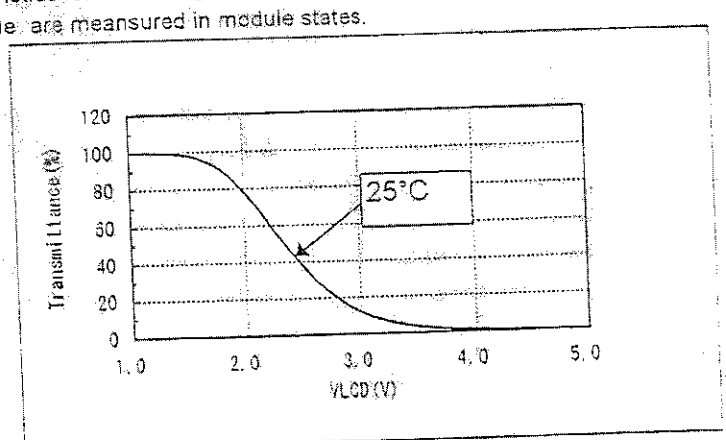

Figure 3 White V-T characteristics

7.5 TEMPERATURE CHARACTERISTICS

Measuring condition

Measurering equipment CS1000(Minolta) ,LCD7000(Otsuka Electoronics),U3400(Hitachi)

Driving conditions VGH=15.0V,VDD=3.0V,VSH=5.0V,VSS=0V, VRCNT=180k ohm

Vcom/C is adjusted to an optimum value.

VLCD=(Vsigpp±Vcompp)/2

Back light IL=15.0mA,Vin=5.0V

Use Casio's measuring circuit.(refer to the appendix.)

Item		Symbol	Return		Remarks
			Ta=-10°C	Ta=60°C	
Contrast		CR	40 or more	40 or more	
Response time	Rise time	TON	Under 200ms	Under 30ms	
	Fall time	TOFF	Under 200ms	Under 50ms	
Display quality			Defects and ununiformity shall be inconspicuous.		criteria of 8.

7.6 SERVICE LIFE OF BACK LIGHT

Definition

When the center luminance drops to 50% of the initial value,the back light is considered to have reached the end of its effective service life.

Bavk light IL=15.0mA,Vin=5.0V

Use Casio's measuring circuit.(refer to the appendix.)

Term of guarantee

	Minimum allowable life of each unit	Ambient temperature
Continuously lit	1000H	25±5°C

8. CRITERIA

8.1 DISPLAY APPEARANCE SPECIFICATIONS

Testing conditions

Display monitor should be inspected with the following conditions.

Viewing direction	Perpendiculer to the LCD surface
Driving signal	Raster pattern(RGB signal color and white)
Signal condition	VLCD:1.6V,2.5V,3V(3steps)
Distance between display and eye	100 to 150 LX
Backlight	IL=15.0mA,Vin=5.0V
	Use Casio's measuring circuit.(refer to the appendix.)

Item		Definition	Criteria
Display defect	Line defect	Black,white,or color line 3 or more dot defects on a strait line	None
	Dot defect	Unusual brightness of the dots unit due to defects of TFT or Cf, or dust , etc. brightness defect: Visible through 5% ND filter Dark defect: Visible darker when VLCD=2.5V	Refer to Table 1.
Display quality	Stain	Unevenness of brightness (white stain,black stain,etc.)	Invisiblethrough 1%ND filter
	Foreign mater	Dust between the touch panel and the LCD and the backlight.	0.2≧D, 2≧N
	Otheres		Due to boundary sample

Average diameter D(mm)
Permissible number :N

Table 1

Model	bright defect	Dark defect	Tatal	
COM35T3112DTR	6	2	6	Connected 2 bright defects is counted in 2 dots and that must be within 3 sets. Connected 2 dark defects is counted in 2 dots and that must be within 1 sets. Connected bright defects- dark defects is counted in 2 dots and that must be within 2 sets.

8.2 APPEARANCE		TERIA	
Test condition		Illuminance	00~1000Lx
		Distance between display and eye	30cm
Item		Criteria	Remarks
Polarizer	Scratch Stain Bubble dust	Invisible items while the monitor is turned on shall be ignored.	Applied to effective display area
S-case		No function trouble	
Each Cable		No function trouble	

Item		appearance	Criteria
touch panel	Glass chipping	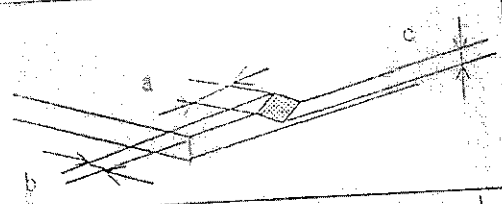	unit: (mm) a≦3 b≦1 c<t (t: Glass thick) but chipping satisfying [a,b≦0.5]shall not be counted. Maximum allowable number on one edge is 5.
		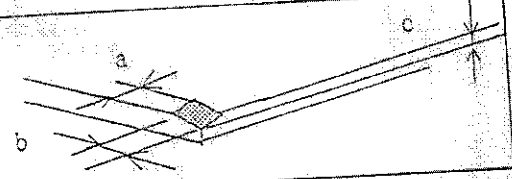	unit: (mm) a≦1.5 b≦1.5 c<t (t: Glass thick)
		Progressive cracks	All NG.
	Stain:Gas,foreign matters,or some other materials inside the product,that can be observed as dots or lines in different colors. Detached ink:Dot or line-like dirt by ink where ink shall not be on naturally. Impression:Impression on the surface.		
		The stain in the effective display area. Detached ink,Foreign matter, Impression 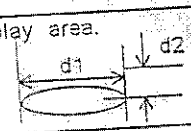	D≦φ0.2 :ignored φ0.2<D :not acceptable Average diameter :D(mm)
		The scratch in the effective display area 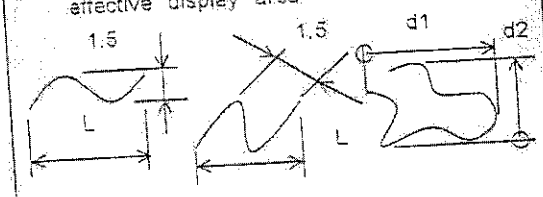 <Example of winding lines>	L≦1.5 and W≦0.05:ignored L≦1.5 and 0.05<W≦0.1 :N<1 Permissible number:N 1.5<L or 0.1<W:not acceptable Ones having low contrast and no harmful influence on practical uses shall not be counted,even if their length(L) are longer than 1.5. (Winding lines is regarded as a foreign matter.)
	Film hold	Film hold	None
	Newton-ring	Interference fringe forming concentric circles. (In case of doubtful situations) Observe on the 60° from the product surface under a while fluorescent lamp (3-wavelength lamp). 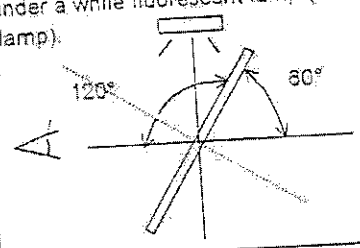	None
	Swell	Measure the height of swell on the film surface.	unit: (mm) H<0.1 (At the timing of the initial delivery)

CASIO COMPUTER CO.,LTD.	SPECIFICATIONS No	01TLM274
	SPECIFICATIONS No.	DB101

9.RELIABILIT[illegible]

	Test ite[illegible]	Test conn[illegible]	Criteria
Endurance test	High temperature strange	Ta=70°C, 240H	[illegible]fer to Table 2.
	Low temperature storange	Ta=−20°C, 240H	[illegible]fer to Table 2.
	High temperature/ humidity storange	Ta=60°C, RH=[illegible], 240H	[illegible]nctions and pictures shall have no trouble.
	High temperture operation	Tp=60°C, 240H	Refer to Table 2.
	Low temperture operation	Tp=−10°C, 240H	Refer to Table 2.
	High temperature/ humidity operation	Tp=40°C, RH=[illegible]0%, 240H	Refer to Table 2
	Thermal shock storange	-20←→70°C (30min/30min) 100cycle	Refer to Table 2.
Mechanical test	Electostatic dischage test (No operation) (LCD FPC)	In accordance with EIAJ ED-4071 C-111. C=200pF,R=0Ω,V=±200V 3 times discharge between the center of the display Shield case is connected to the Ground.	No destruction
	Surface (No operation)	C=250pF,R=100Ω,V=±12kV 5 times discharge at the center of the display. Shield case is connected to the Ground.	No destruction
	FPC tension test (LED FPC shall be excluded)	Apply 3N force for 10 seconds in the direction of ±90 degrees against the FPC original direction. Coming and going three times.	Functions and pictures shall have no trouble.
	Vibration test	Amplitude 1.5mm, f=10 to 55Hz, 2 hours each in the X, Y, and Z directions.	Functions and pictures shall have no trouble.
	Impact test	Use CASIO original jigs. Apply half-sine curve of peak acceleration 981 m/s^2 for operation time 6ms, 3 times each in X, Y, and Z directions, in accordance with JIS C 0041-1987.	Functions and pictures shall have no trouble. Refer to the below diagram.
Packing test	Packing vibration-proof test	19.6m/s^2 acceleration and f=10→55→10Hz, apply in each of X, Y, and Z direction for 30 minutes.	Functions and pictures shall have no trouble.
	Packing drop test	Drop the packing from 75cm height, one time each for 6-faces, 3-edges, and1-corner.	Functions and pictures shall have no trouble.

Note : Ta = Ambient temperature Tp = Touch Panel temperature

Table 2 Reliability Criteria

Measure the parameters after leaving the monitors at the room temperature for more than 2 hours after the test completion.

Item	Standard	Remarks
Contrast ratio	40 or more	
Display quality	No visible abnormality shall be seen.	As criteria of 8.

Casio original jig

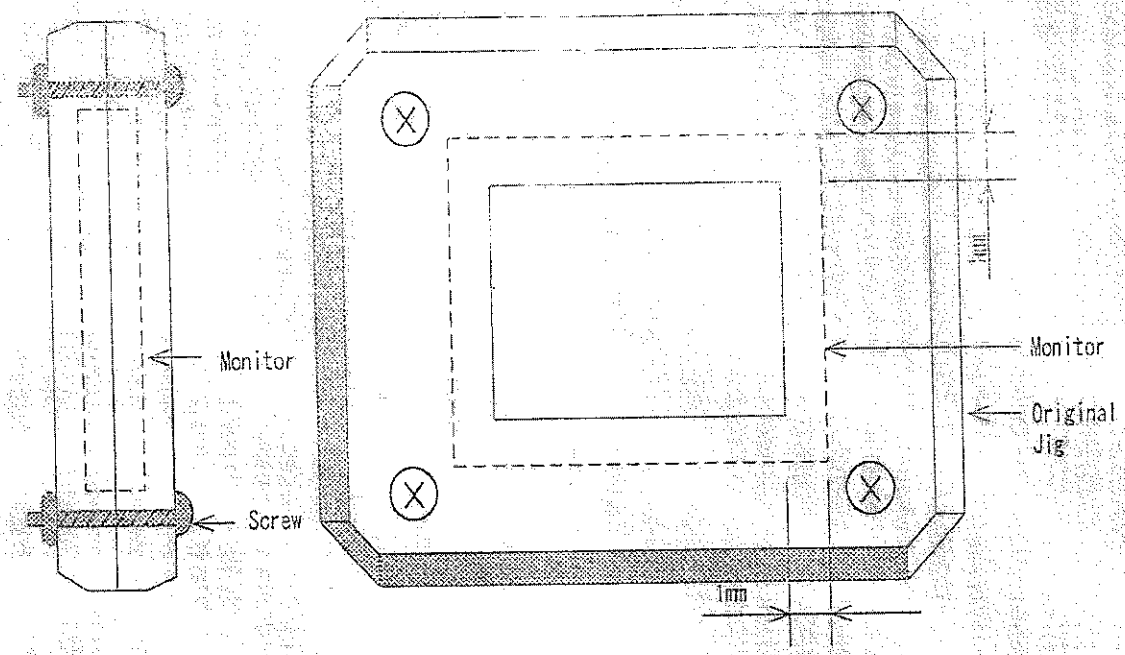

10. PACKING SPECIFICATION

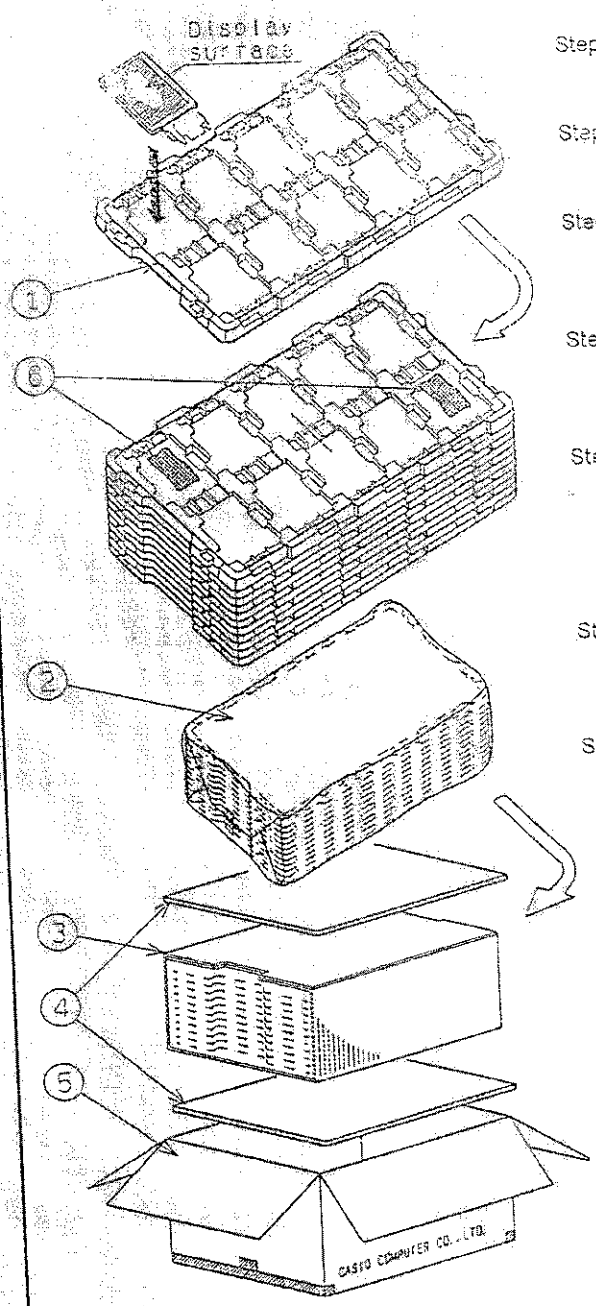

Step 1. Each product is to be placed in one of the cut-outs of the tray with the display surface facing upward.
(10 products per tray)

Step 2. Each tray needs to be 180 degrees with respect to the tray below or above it and the trays be in a stack of 10.
One empty tray is to be put on the top of stack of 10 trays.

Step 3. Two moisture absorbers are to be placed on the top tray as shown in the drawing.
The stack of 11 trays is to be wrapped in a plastic bag.

Step 4. The opening of the plastic bag is to be folded and sealed with adhesive tape.
The stack or trays in the plastic back is to be inserted into a inner carton.

Step 5. A corrugated board is to be placed on the top and on the bottom of the inner carton.
The two corrugated boards and the inner carton is to be inserted into an outer carton.

Step 6. The outer carton needs to sealed with packing tape as shown in the drawing.
The model number, quantity of products, and shipping date are to be printed on the outer carton.
If necessary, shipping labels or impression markings are to be put on the outer carton.

Step 7. The outer carton is to be inserted into a extra outer carton with same direction.
The extra outer carton needs to sealed with packing tape as shown in the drawing.

Step 8. The model number, quantity of products, and shipping date are to be printed on the extra outer carton.
If necessary, shipping labels or impression markings are to be put on the extra outer carton.

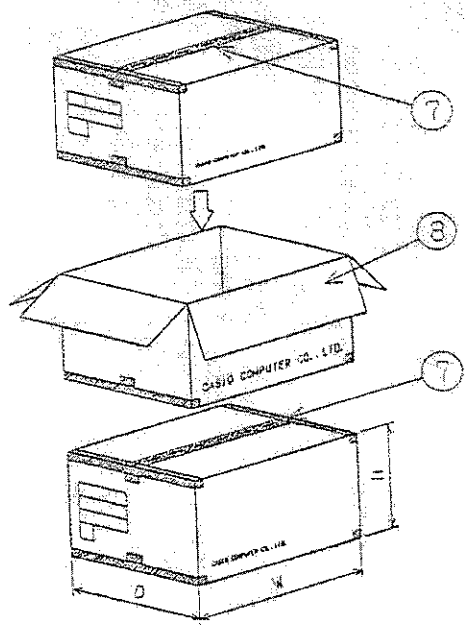

Remark: The return of packing materials is not required.

	Packing item name	Specs., Material
①	Tray	Polypropylene
②	Plastic bag	Polypropylene
③	Inner carton	Corrugated cardboard
④	Inner board	Corrugated cardboard
⑤	Outer carton	Corrugated cardboard
⑥	Drier	Moisture absorber
⑦	Packing tape	
⑧	Extra outer carton	Corrugated cardboard

Dimension of extra outer carton
D : Approx. (338mm)
W : Approx. (549mm)
H : Approx. (198mm)
Quantity of products packed in one carton:100
Gross weight : Approx. 9kg

11.Handing Precautions
11.1 Precautions

⚠ Caution

(1) Do not make an impact on the glass, because it may break, causing possible dangers.

(2) In case that the glass breaks, do not touch it directly with handshands. (You may get glass splinters in your hands or cut your skin.)

(3) In the event that you injure yourself, receive first aid and consult a physician.

(4) Do not put the liquid crystal in your mouth.
In the event that the liquid crystal panel breaks, the liquid crystal inside will seep out. Although its toxicity has not been verified, you should not put the panel in your mouth.)

(5) If the liquid crystal gets on your skin or clothing, wash it off thoroughly.
(In the event that the liquid crystal gets on your clothing or hand, wipe it off with alcohol, or carefully wash it off with soap and water. If it gets into your eyes, wash your eyes with clean running water for at least 15 minutes, then see a physician)

(6) When disposing this product,follow the industrial waste diposal standards of the country or region concerned.

(7) Do not connect or disconnect this product while the set remains switched on.

(8) This product has been assembled to a high degree of accuracy. Do not attempt to dismantle or modify it.

⚠ Caution :

This mark is used to indicate a precaution or an instruction which, if not correctly observed, may result in bodily injuries, or material damages alone.

11.2 HANDLING PRECAUTIONS

1)Wear finger sacks when handling the monitors at the incoming inspection and/or the production lines, and keep the working area very clean.
Do not touch the surface of the touch panel because it is vulnerable.
2) Wear a wrist-strap and use an ion blower to avoid electrostatic discharge when handling this product, because it contains an LED that is vulnerable to electrostatic discharge.
Designate an appropriate operating area, and set equipment, tools, and machines properly when handling this product.
3)Do not scratch or hit the monitor surface with a tool, and do not drop the monitor, because the LCD panel made of glass substrates is fragile and the polaizing film is vulnerable to frictions and
mechanical impacts.
In case that the monitor was accidentally dropped, it must be regarded as defective, and do not use it any longer.
4)Do not use or store the monitor in a place where dew is expected.
5)Do not store the LCD under direct sunlight or at a place exposed to ultraviolet rays because it will cause the deterioration of the LCD.
6)Do not stain the cables or make them damaged, because these might cause contact defects and/or wrong effects on the reliability.
7)Do not bend or pull the FPC part or carry the monitor just by holding the FPC with fingers.
8)Before assembling, remove the protection film from the surface of the monitor according to section 11.5.
9)Mounting structure shall not have the force, bend or twist the product.
10)Never operate the product touch panel surface with finger nails or non-specified pens.
11)Never operate such actions as sliding or hitting on the outside the effective display area.
12)In case to double side adhesive tape on touch panel surface, do not rework, otherwise it many occur electrical future.

11.3 OPERATING PRECAUTIONS

1)Do not expose the driver ICs on the monitor to strong lights during operation.
It may cause function failures, because the driver ICs have no light shield.

2)When driving the monitor, apply the input signal after the power voltage is supplied.
When turning off the power, turn off the input signal before or at the same timing of switching off the power.

3)Apply the optimum value of Vcom/c when using the monitor.

11.4 SHIPPING CARTON BOX STORAGE CONDITIONS

Environment
- Temperature: 0 to 40 °C
- Relative humidity: 80% or less

Shall have no dew if the temperature is low and the humidity is high.
- Atmosphere

Any poisonous gases and chemical substances such as acid or alkaline, which will erode electronic components and/or wiring materials, shall not be detected in a storage room.
- Period Within approx. 3 months
- Unpacking

In order to prevent the TFT monitors from being damaged by static electricity during the unpacking process, adjust the relative humidity of the working room to 50%RH or higher, and take effective measures such as static electricity grounding.

11.5 PRECAUTIONS AT PROTECTION FILM REMOVING PROCESS

When removing the protection film from the pointor screen, static electricity may be generated, causing a function destruction or absorbing dusts. To avoid them, the following environment and working methods are recommended.

A)Working environment

a)Keep the relative humidity at 50% to 70% and the temperature at 15 to 27°C.

b)Workers shall wear conductive working clothes, conductive shoes, conductive finger sacks, and wrist-strap bands. The working floor shall also be conductive.

c)The working room shall be a clean room, preventing dusts from coming in. Setting an adhesive mat at the entrance of the room is recommeded.

B)Working method

a)Place an ion blower with an optimal distance from the monitor and an optimal wind direction.

b)Put an adhesive tape (Scotch tape, etc.) on the touch panel film's corners near the ion blower to protect the touch panel from being damaged.

c)Pull the adhesive tape slowly (taking more than 2 seconds to complete) towards the operator to remove the protection film.

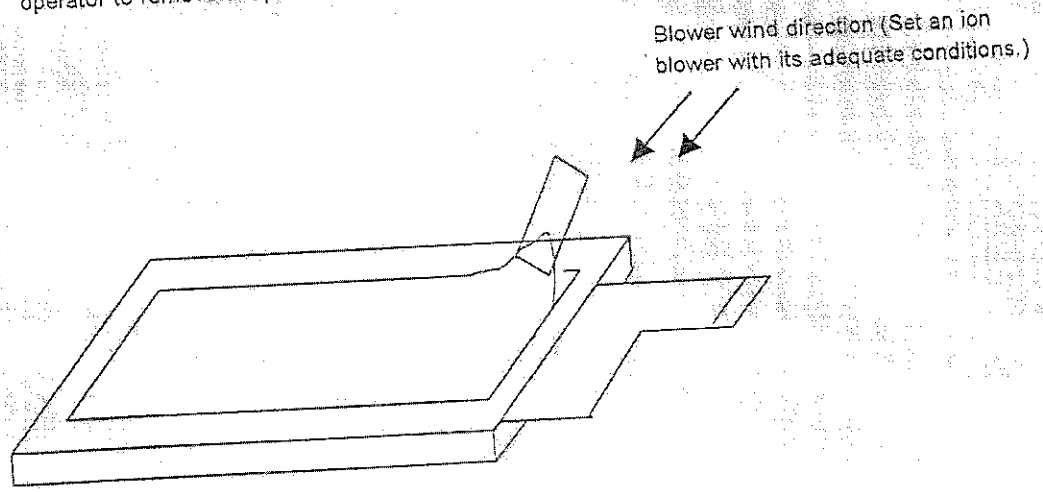

APPENDIX :
Standard Measurement Method of Optical Characteristics for TFT-LCD Monitors.

1. Testing conditions
Measuring instrument:CS1000(Minolta), LCD7000(Otsuka Electronics), LCD-5100(Hitachi)
Driving conditions: See "Standard measuring method for optical characteristics."
Measuring temperature : Unless otherwise specified, the temperature is 25°C
Measuring system : See the diagram below. The luminance meter is positioned on the normal line on the measuring point.

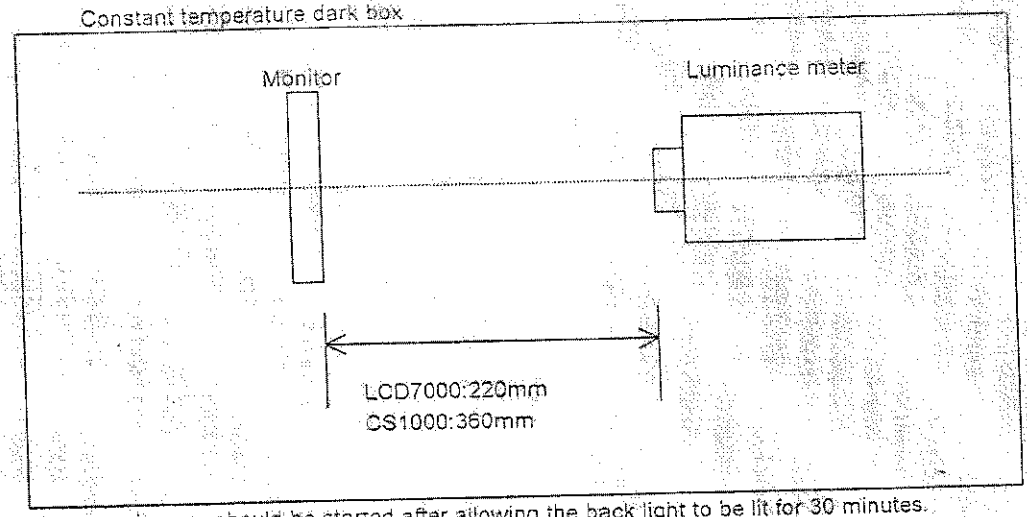

A measuring run should be started after allowing the back light to be lit for 30 minutes.

Measuring points: The center point of the screen
For obtaining the luminance distribution only, nine points shall be measured shown below.

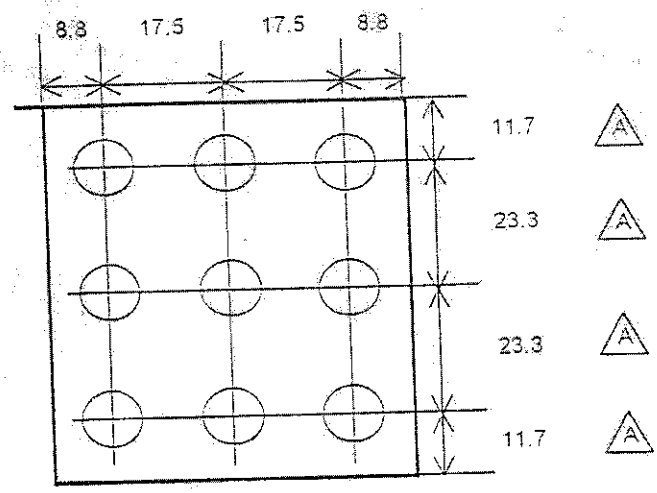

Unit:mm

Backlight IL=15.0mA, Vin=5.0V
Use Casio's measuring circuit.(refer to the sppendix.)

Testing meth

Note	Item	Testing Method	Measuring equipment	remarks
1	Response time	Measure output signal waves with a luminance meter when the raster or window pattern is changed over from white to black and from black to white 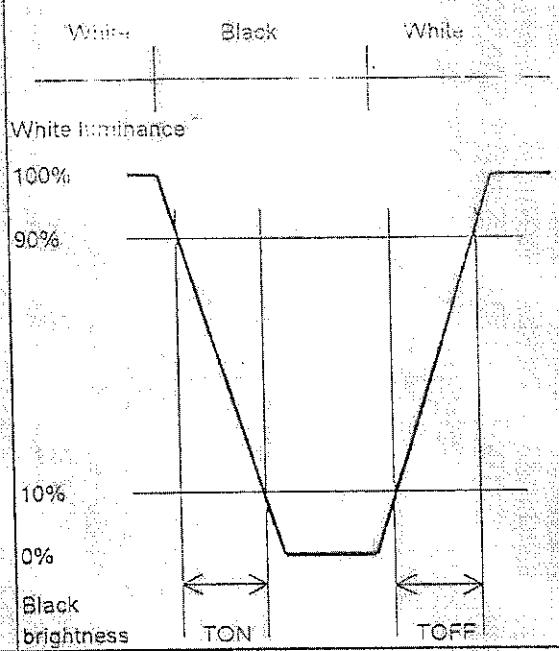	LCD7000	Black VLCD=5V White VLCD=1V T ON Rise time T OFF Fall time
2	Contrast ratio	Put the raster or window pattern on the display. Then measure the maximum luminance Y1 (VLCD = 1V) and the minimum luminance Y2 (VLCD = 5V) at the center of the display. Contrast ratio = Y1/Y2 Measurement spot diameter: 8mm ϕ	CS1000	
3	Viewing angle Horizontal θ Vertical ϕ	Change the viewing angles step by step in up, down, left, and right direction each, and measure contrast ratio to obtain angles where contrast ratio become 5 respectively.	LCD7000	
4	V-T threshold	Change the VLCD by 0.1V step and measure monitor luminances. VLCD, where the luminance is 90%, 50%, and 10% of the maximum value ,is defined as V90, V50, and V10 respectively. 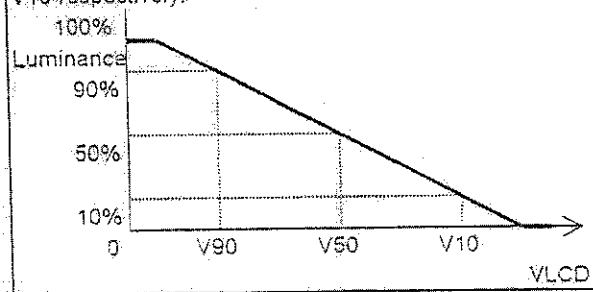	LCD7000	
5	White chromaticity balance	Measure chromaticity coordinates x and y of the CIE 1931 colorimetric system under VLCD = 1V. Color matching function is at view of 2°	CS1000	

Note NO.	Item	Testing Method	Measuring equipment	Remarks
6	Max. contrast angle	Change the viewing angles step by step in up/down direction, and measure the contrast ratio at each step to obtain angles where the contrast ratio becomes	LCD7000	
7	Reflectance	Use an integrating sphere to receive lights and obtain each reflectance while the angle of the light incident is 12° from the normal direction in the vertical and horizonal direction respectively. Reflectance= {(horizontal reflectance value)+ (vertical reflectance value)}/2	U3410	
8	Image sticking	Confirm image stickings with eyes after displaying the window pattern (VLCD=1/5V)for 2 hours		Vcom/C is adjusted to optimum value.
9	Center luminance	Measure the luminance at the center of the screen.		
10	Luminance distribution	(Luminance distribution) = 100 x B/A % A : max. luminance of the 9 points B : min. luminance of the 9 points		

Casio's original inverter circuit

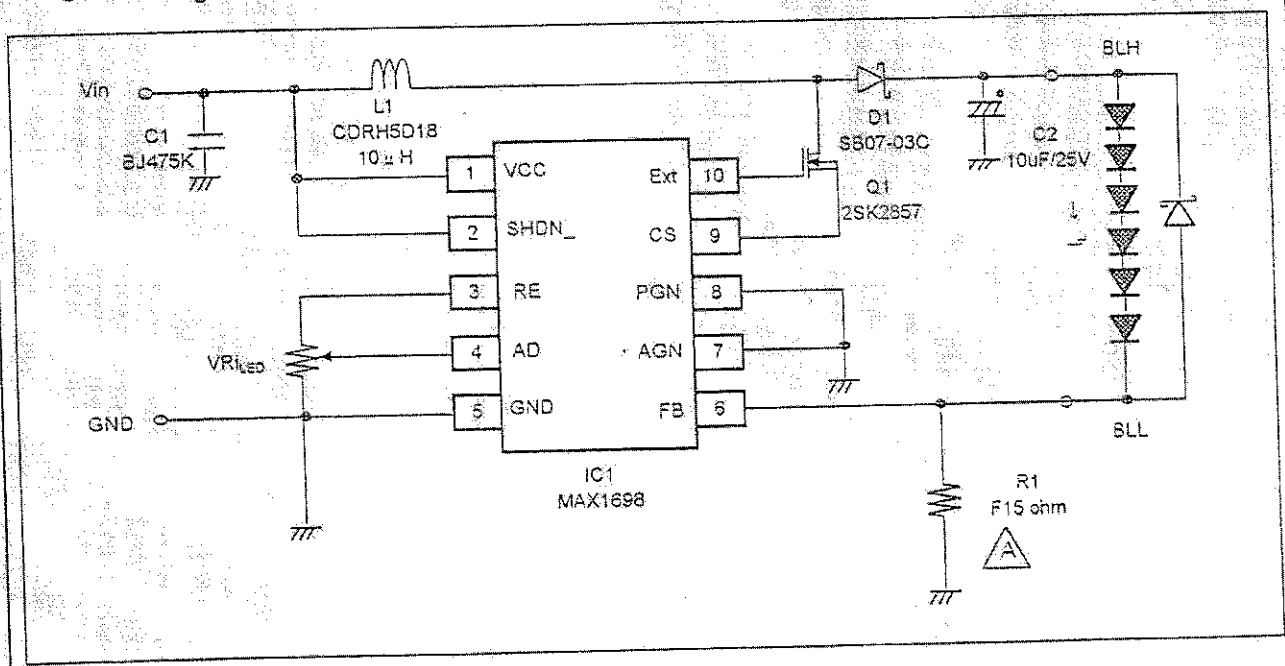

How to switch the dipslay mode Up/Down and Right/Left reversal
(With FPC below/bottom mounting)

Up/Down reversal
[Normal display]
GPCK=Hi when GSRT raise up : Normal display mode

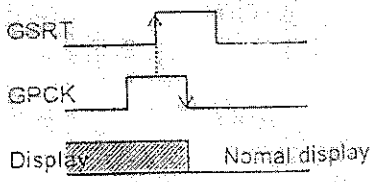

[Up/Down reversal display]
GPCK=Lo when GSRT raise up : Up/Down reversal display
Swich the display (shift direction of shiftregisier) when GPCK fall/down

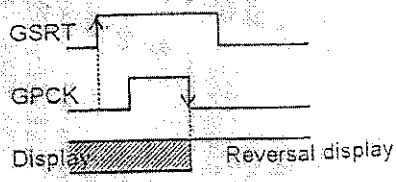

Display Start Timing
Read GSRT at fall/down of GPCK and then shift when raise/up of GPCK.
Thereofre, X1 shown in the below figure to be a selected signal of the 1st line of the module.
2 Gate driver are used, and so in order to avoid incontinuity of shift movement,
160CK is needed for GSRT-D signal input before GSRT-U signal.

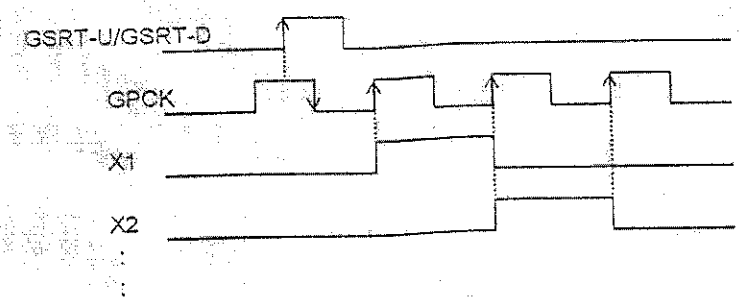

Right/Left reversal
[Normal display]
Set RIT=Lo to input start pulse from STHL terminal.
Pulse for cascade connection to be output from STHR terminal, but it is not used with this module.
In case of not-use of Right/Left reversal display mode, set STHR output to be open.
In case of serial data input, display data to be input in the order of R,G,B,R,G,B . ....

[Right/Left reversal]
Set RIT=Hi to input start pulse from STHR terminal.
Pulse for cascade connction to be output from STHL teminal, and so set STHL driving buffer
by using tri-state buffer so that RIT=Hi leads to HZ. STHR driving buffer requires Rit=Lo set to HZ.
In case of serial data input, display data to be input in the order of B,G,R,B,G,R. ....

CASIO COMPUTER CO.,LTD.

SPECIFICATIONS No. X3112

SPECIFICATIONS No. 01TLM274

Driving Timing

Horizontal Timing (MediaQ MQ-1100/1132 use)

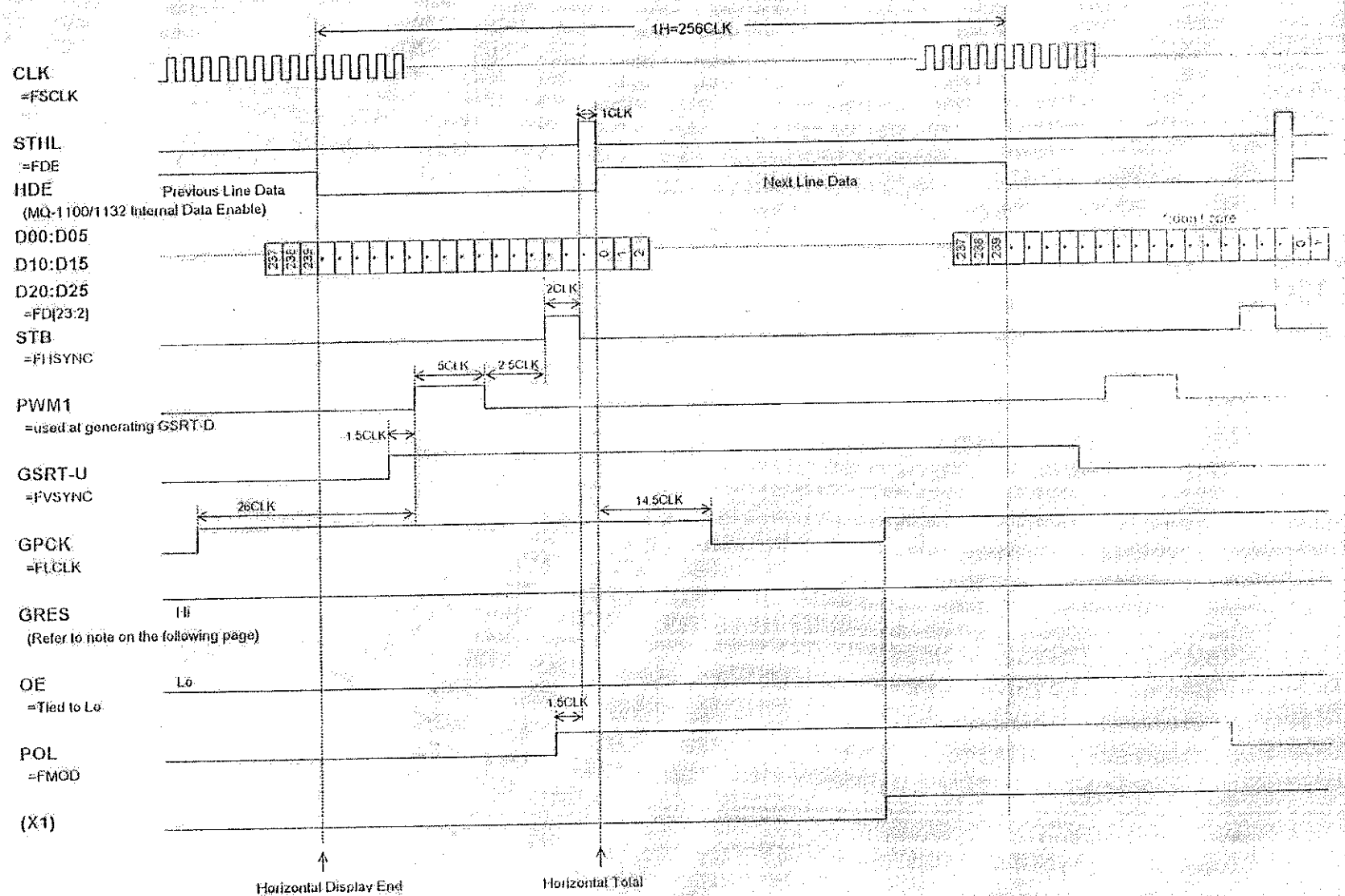

ISSUE:Mar.13.2[illegible]

Vertical Timing (MediaQ MQ-1100/1132 use)

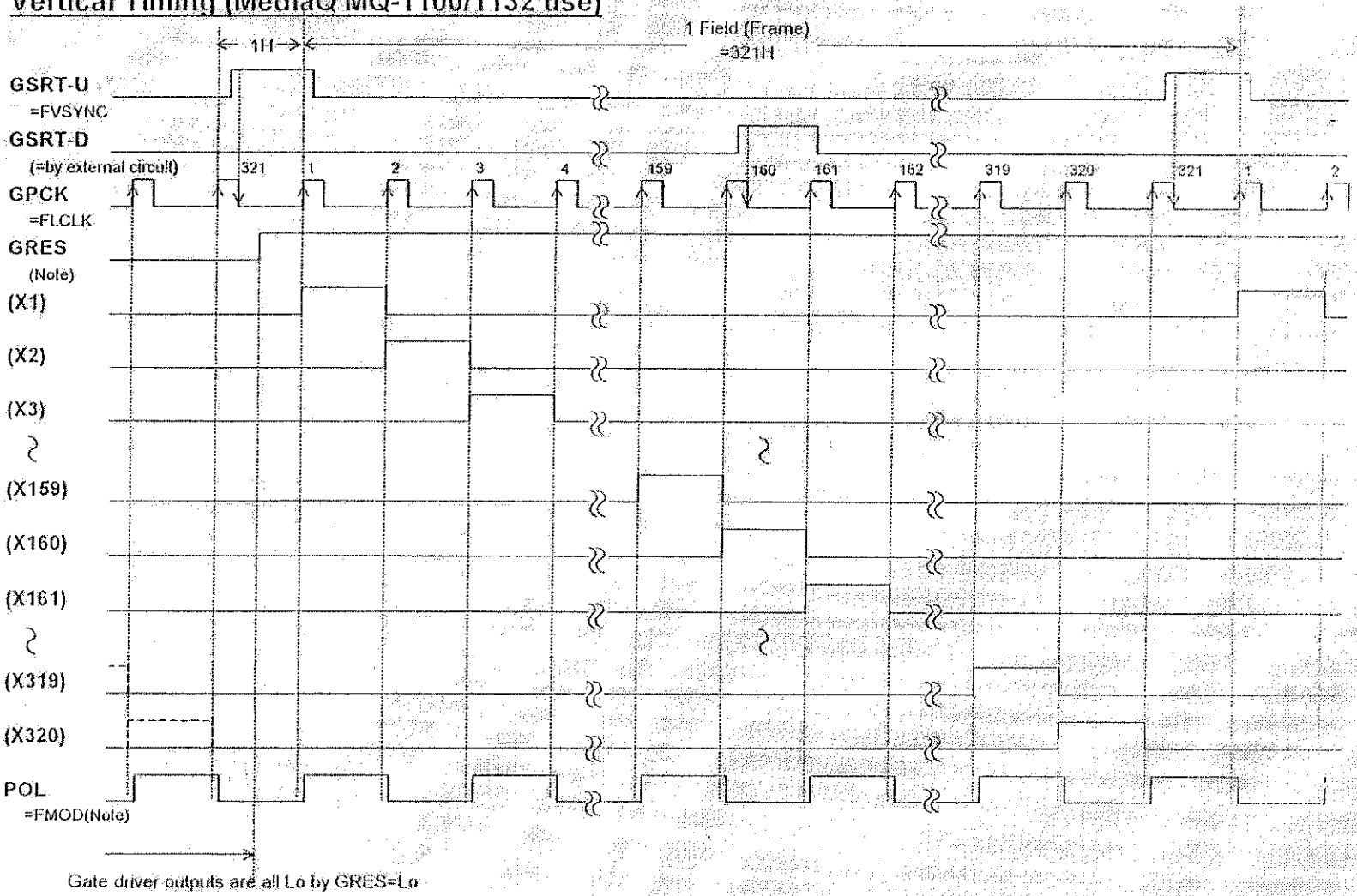

Note : Xn represents the outputs of gate driver. Display data must be finished to transfer one H earlier.
The polarity with POL must be alternated per line/field.
When powering ON the equipment , keep the GRES signal at the Lo level for at least two field when allowing other signals to be fed as usual.

External addition Circuit Diagram

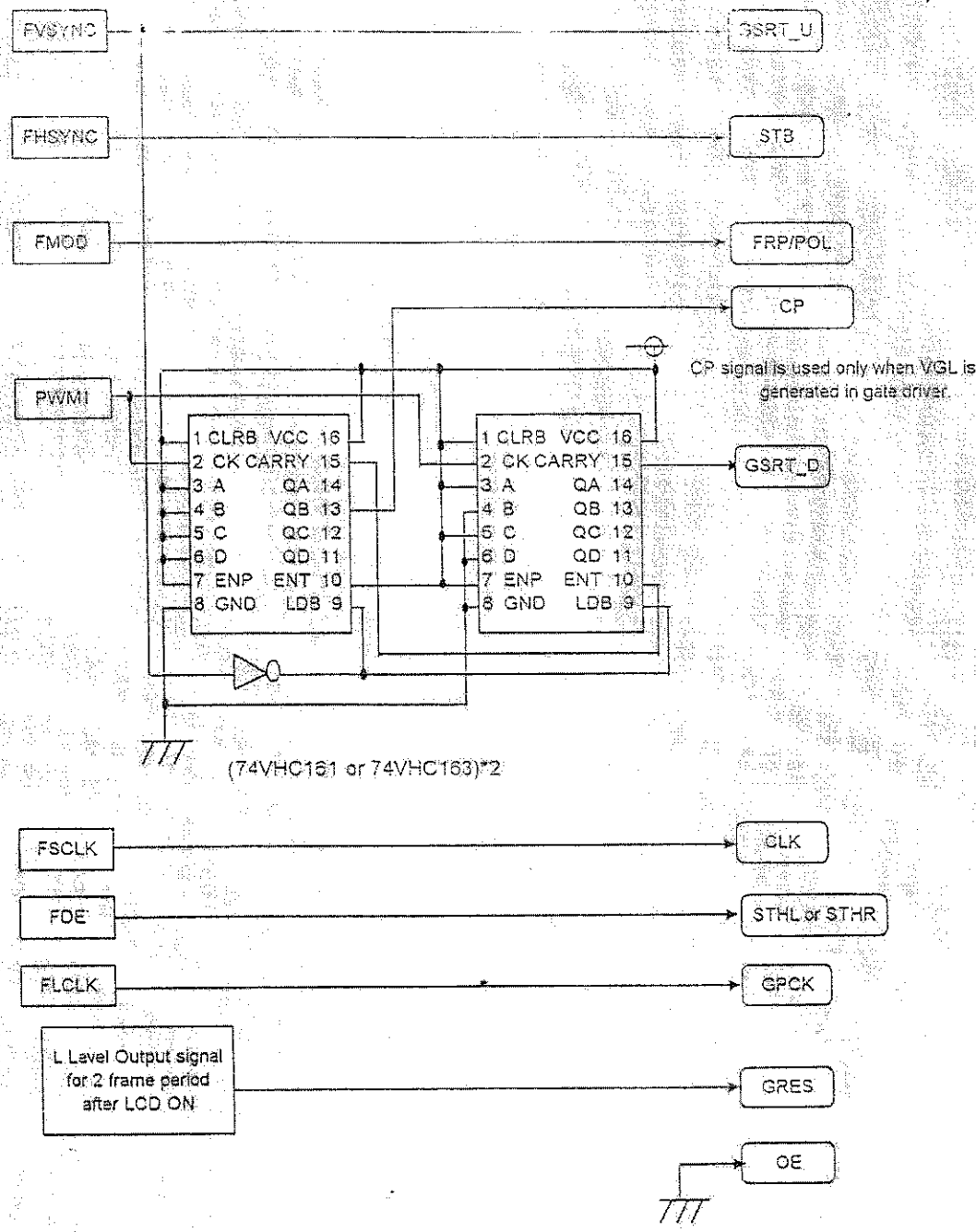

Fig. Example of External addition Circuit Diagram (Non-UP/DOWN Reversal)