TFT LCD Approval Specification

MODEL NO.: V520H1 - L01

Customer: _____

Approved by: _____

Note:

Approved By	TV Head Division
	LY Chen

Reviewed By	QRA Dept.	Product Development Div.
	Tomy Chen	WT Lin

Prepared By	LCD TV Marketing and Product Management Div.
	Ken Wu Keith Chen

- CONTENTS -

REVISION HISTORY ---------- 3

1. GENERAL DESCRIPTION ---------- 4
   1.1 OVERVIEW
   1.2 FEATURES
   1.3 APPLICATION
   1.4 GENERAL SPECIFICATIONS
   1.5 MECHANICAL SPECIFICATIONS

2. ABSOLUTE MAXIMUM RATINGS ---------- 5
   2.1 ABSOLUTE RATINGS OF ENVIRONMENT
   2.2 ELECTRICAL ABSOLUTE RATINGS
      2.2.1 TFT LCD MODULE
      2.2.2 BACKLIGHT INVERTER UNIT

3. ELECTRICAL CHARACTERISTICS ----------7
   3.1 TFT LCD MODULE
   3.2 BACKLIGHT UNIT
      3.2.1 CCFL (Cold Cathode Fluorescent Lamp) CHARACTERISTICS
      3.2.2 INVERTER CHARACTERISTICS
      3.2.3 INVERTER INTERTFACE CHARACTERISTICS

4. BLOCK DIAGRAM ----------13
   4.1 TFT LCD MODULE

5. INPUT TERMINAL PIN ASSIGNMENT ----------14
   5.1 TFT LCD MODULE
   5.2 BACKLIGHT UNIT
   5.3 INVERTER UNIT
   5.4 BLOCK DIAGRAM OF INTERFACE
   5.5 LVDS INTERFACE
   5.6 COLOR DATA INPUT ASSIGNMENT

6. INTERFACE TIMING ----------22
   6.1 INPUT SIGNAL TIMING SPECIFICATIONS
   6.2 POWER ON/OFF SEQUENCE

7. OPTICAL CHARACTERISTICS ----------25
   7.1 TEST CONDITIONS
   7.2 OPTICAL SPECIFICATIONS

8. PRECAUTIONS ----------29
   8.1 ASSEMBLY AND HANDLING PRECAUTIONS
   8.2 SAFETY PRECAUTIONS

9. REGULATORY STANDARD ----------29
   9.1 SAFETY

10. PACKAGING ----------30
   10.1 PACKING SPECIFICATIONS
   10.2 PACKING METHOD

11. MECHANICAL CHARACTERISTICS ----------32

REVISION HISTORY

Version	Date	Page (New)	Section	Description
Ver. 2.0	Mar.19,'07	All	All	Approval Specification was first issued.

1. GENERAL DESCRIPTION

1.1 OVERVIEW

V520H1-L01 is a 52" TFT Liquid Crystal Display module with 28-CCFL Backlight unit and 2ch-LVDS interface. This module supports 1920 x 1080 HDTV format and can display true 16.7M colors (8-bit/color). The inverter module for backlight is built-in.

1.2 FEATURES

- High brightness (500 nits)
- High contrast ratio (1500:1)
- Fast response time (Gray to gray average 6.5 ms)
- High color saturation (NTSC 72%)
- Full HDTV (1920 x 1080 pixels) resolution, true HDTV format
- DE (Data Enable) only mode
- LVDS (Low Voltage Differential Signaling) interface
- Optimized response time for 50/60 Hz frame rate
- Ultra wide viewing angle : Super MVA technology
- 180 degree rotation display option
- RoHS compliance

1.3 APPLICATION

- Standard Living Room TVs.
- Public Display Application.
- Home Theater Application.
- MFM Application.

1.4 GENERAL SPECIFICATI0NS

Item	Specification	Unit	Note
Active Area	1152 x 648 (52.037")	mm	(1)
Bezel Opening Area	1166.0x662.0	mm	
Driver Element	a-si TFT active matrix	-	-
Pixel Number	1920x R.G.B. x 1080	pixel	-
Pixel Pitch(Sub Pixel)	0.2 (H) x 0.2 (V)	mm	-
Pixel Arrangement	RGB vertical stripe	-	-
Display Colors	16.7M	color	-
Display Operation Mode	Transmissive mode / Normally black	-	-
Surface Treatment	Anti-Glare coating (Haze 25%) Hard coating (3H)	-	(2)

Note (1) Please refer to the attached drawings in chapter 9 for more information about the front and back outlines.

Note (2) The spec of the surface treatment is temporarily for this phase. CMO reserves the rights to change this feature.

1.5 MECHANICAL SPECIFICATIONS

Item		Min.	Typ.	Max.	Unit	Note
Module Size	Horizontal (H)	1235	1236	1237	mm	(1), (2)
	Vertical (V)	718.2	719.2	720.2	mm	
	Depth (D)	56.5	57.5	58.5	mm	W/I INV-COVER
Weight			21000		g	-

Note (1) Please refer to the attached drawings for more information of front and back outline dimensions.

Note (2) Module Depth does not include connectors.

2. ABSOLUTE MAXIMUM RATINGS

2.1 ABSOLUTE RATINGS OF ENVIRONMENT

Item	Symbol		Value		Unit	Note
			Min.	Max.		
Storage Temperature	T_{ST}		-20	+60	ºC	(1)
Operating Ambient Temperature	T_{OP}		0	50	ºC	(1), (2)
Shock (Non-Operating)	S_{NOP}	X, Y axis	-	40	G	(3), (5)
		Z axis	-	30	G	(3), (5)
Vibration (Non-Operating)	V_{NOP}		-	1.0	G	(4), (5)

Note (1) Temperature and relative humidity range is shown in the figure below.

(a) 90 %RH Max. (Ta ≦ 40 ºC).

(b) Wet-bulb temperature should be 39 ºC Max. (Ta > 40 ºC).

(c) No condensation.

Note (2) The maximum operating temperature is based on the test condition that the surface temperature of display area is less than or equal to 65 ºC with LCD module alone in a temperature controlled chamber. Thermal management should be considered in your product design to prevent the surface temperature of display area from being over 65 ºC. The range of operating temperature may degrade in case of improper thermal management in your product design.

Note (3) 11 ms, half sine wave, 1 time for ± X, ± Y, and ± Z.

Note (4) 10 ~ 200 Hz, 10 min, 1 time each X, Y, Z.

Note (5) At testing Vibration and Shock, the fixture in holding the module has to be hard and rigid enough so that the module would not be twisted or bent by the fixture. The module would not be twisted or bent by the fixture.

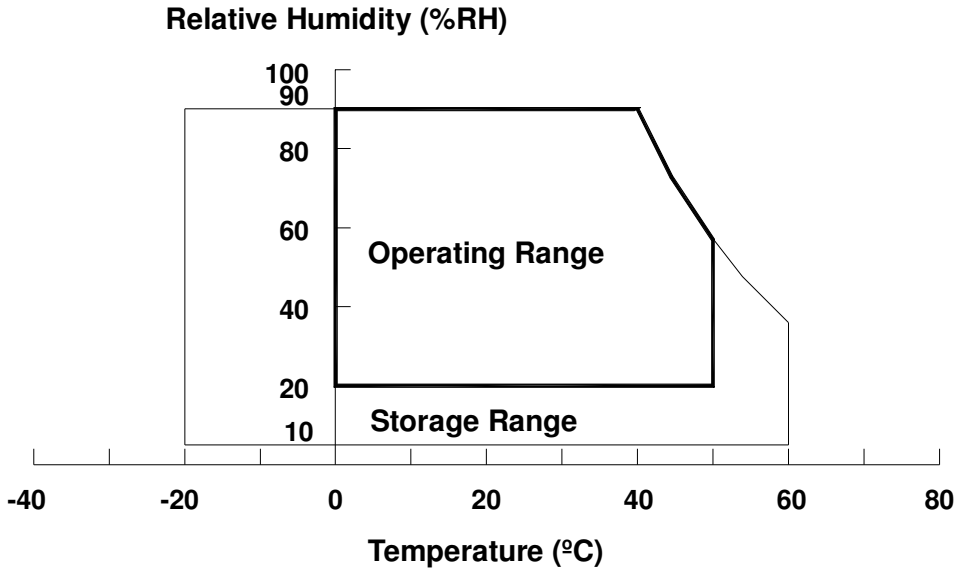

2.2 ELECTRICAL ABSOLUTE RATINGS

2.2.1 TFT LCD MODULE

Item	Symbol	Value		Unit	Note
		Min.	Max.		
Power Supply Voltage	V_{CC}	-0.3	13.5	V	(1)
Logic Input Voltage	V_{IN}	-0.3	3.6	V	

2.2.2 BACKLIGHT INVERTER UNIT

Item	Symbol	Value		Unit	Note
		Min.	Max.		
Lamp Voltage	V_W	—	3000	V_{RMS}	
Power Supply Voltage	V_{BL}	0	30	V	(1)
Control Signal Level	—	-0.3	7	V	(1), (3)

Note (1) Permanent damage to the device may occur if maximum values are exceeded. Function operation should be restricted to the conditions described under Normal Operating Conditions.

Note (2) No moisture condensation or freezing.

Note (3) The control signals include On/Off Control, Internal PWM Control, External PWM Control and Internal/External PWM Selection.

3. ELECTRICAL CHARACTERISTICS

3.1 TFT LCD MODULE (Ta = 25 ± 2 ºC)

Parameter		Symbol	Value			Unit	Note
			Min.	Typ.	Max.		
Power Supply Voltage		V_{CC}	10.8	12	13.2	V	(1)
Power Supply Ripple Voltage		V_{RP}	-	-	350	mV	
Rush Current		I_{RUSH}	-	-	4.5	A	(2)
Power Supply Current	White	I_{CC}	-	1.5	2.1	A	(3)
	Black		-	0.6	-	A	
	Vertical Stripe		-	1.2	-	A	
LVDS Interface	Differential Input High Threshold Voltage	V_{LVTH}	-	-	+100	mV	
	Differential Input Low Threshold Voltage	V_{LVTL}	-100	-	-	mV	
	Common Input Voltage	V_{LVC}	1.125	1.25	1.375	V	
	Terminating Resistor	R_T	-	100	-	ohm	
CMOS interface	Input High Threshold Voltage	V_{IH}	2.7	-	3.3	V	
	Input Low Threshold Voltage	V_{IL}	0	-	0.7	V	

Note (1) The module should be always operated within the above ranges.

Note (2) Measurement condition:

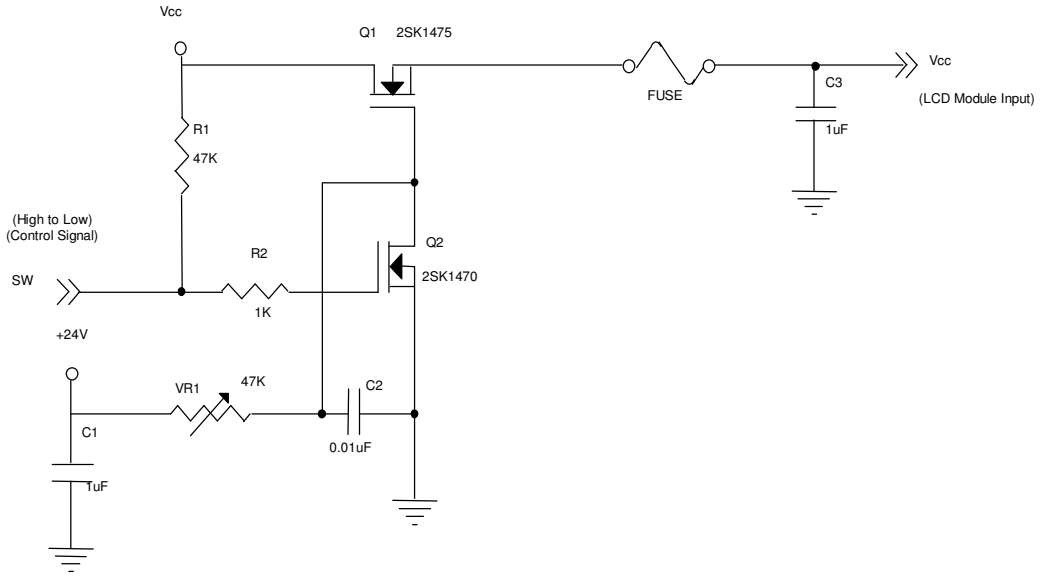

Vcc rising time is 470us

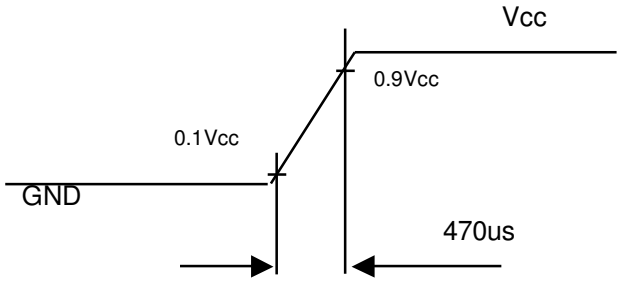

Note (3) The specified power supply current is under the conditions at Vcc = 12V, Ta = 25 ± 2 ºC, f_v = 60 Hz, whereas a power dissipation check pattern below is displayed.

a. White Pattern

Active Area

b. Black Pattern

Active Area

c. Vertical Stripe Pattern

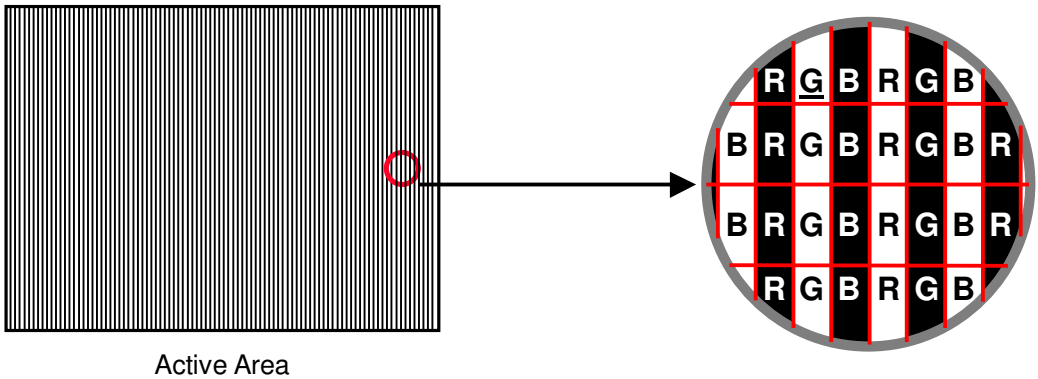

Active Area

3.2 BACKLIGHT UNIT

3.2.1 CCFL (Cold Cathode Fluorescent Lamp) CHARACTERISTICS (Ta = 25 ± 2 ºC)

Parameter	Symbol	Value			Unit	Note
		Min.	Typ.	Max.		
Lamp Input Voltage	V_L	-	1610	-	V_{RMS}	-
Lamp Current	I_L	5.0	5.5	6.0	mA_{RMS}	(1)
Lamp Turn On Voltage	V_S	-	-	2580	V_{RMS}	(2), Ta = 0 ºC
		-	-	1985	V_{RMS}	(2), Ta = 25 ºC
Operating Frequency	F_L	40	-	70	KHz	(3)
Lamp Life Time	L_{BL}	50,000	-	-	Hrs	(4)

3.2.2 INVERTER CHARACTERISTICS (Ta = 25 ± 2 ºC)

Parameter	Symbol	Value			Unit	Note
		Min.	Typ.	Max.		
Power Consumption at Gray level 255	P_{255}	-	245	255	W	(5), I_L = 5.5mA
Power Consumption at Gray level 128	P_{128}	-	135	-	W	
Power Consumption at Gray level 0	P_0	-	85	-	W	
Power Supply Voltage	V_{BL}	22.8	24	25.2	V_{DC}	
Power Supply Current	I_{BL}	-	10.2	-	A	Non Dimming
Input Ripple Noise	-	-	-	912	mV_{P-P}	V_{BL}=22.8V
Oscillating Frequency	F_W	47	50	53	kHz	
Dimming frequency	F_B	150	160	170	Hz	
Minimum Duty Ratio	D_{MIN}	-	20	-	%	

Note (1) Lamp current is measured by utilizing AC current probe and its value is average by measuring master and slave board.:

Note (2) The lamp starting voltage V_S should be applied to the lamp for more than 1 second after startup. Otherwise the lamp may not be turned on.

Note (3) The lamp frequency may produce interference with horizontal synchronous frequency of the display input signals, and it may result in line flow on the display. In order to avoid interference, the lamp frequency should be detached from the horizontal synchronous frequency and its harmonics as far as possible.

Note (4) The life time of a lamp is defined as when the brightness is larger than 50% of its original value and the effective discharge length is longer than 80% of its original length (Effective discharge length is defined as an area that has equal to or more than 70% brightness compared to the brightness at the center point of lamp.) as the time in which it continues to operate under the condition at Ta = 25 ±2℃ and I_L = 5 ~ 6 mArms.

Note (5) The power supply capacity should be higher than the total inverter power consumption P_{BL}. Since the pulse width modulation (PWM) mode was applied for backlight dimming, the driving current changed as PWM duty on and off. The transient response of power supply should be considered for the changing loading when inverter dimming.

Note (6) The measurement condition of Max. value is based on 52" backlight unit under input voltage 24V, average lamp current 5.8 mA and lighting 30 minutes later.

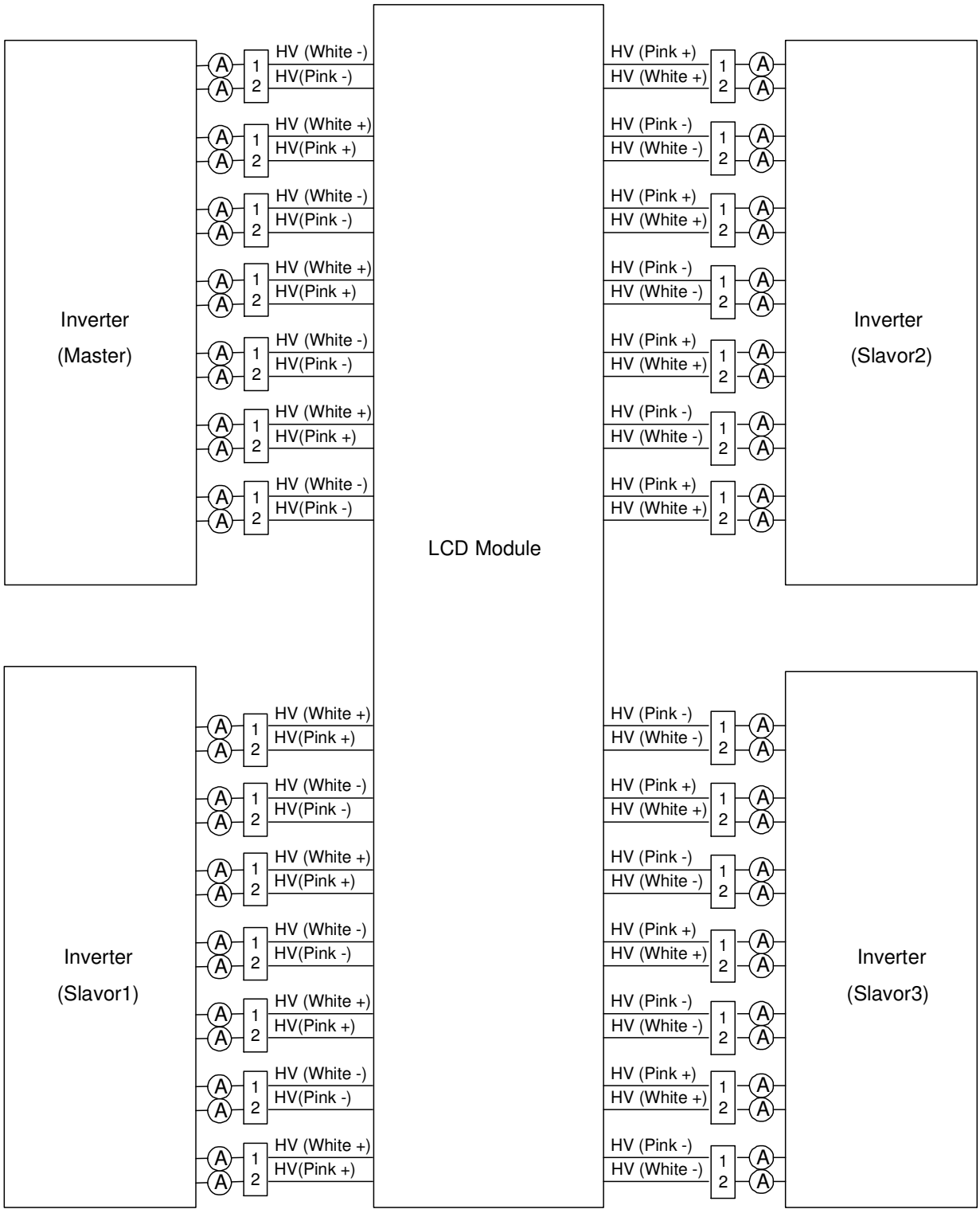
Inverter
(Master)
LCD Module
Inverter
(Slavor2)
Inverter
(Slavor1)
Inverter
(Slavor3)
HV (White -)
HV(Pink -)
HV (White +)
HV(Pink +)
HV (Pink +)
HV (White +)
HV (Pink -)
HV (White -)
A
1
2

3.2.3 INVERTER INTERTFACE CHARACTERISTICS

Parameter		Symbol	Test Condition	Value			Unit	Note
				Min.	Typ.	Max.		
On/Off Control Voltage	ON	V_{BLON}	—	2.0	—	5.0	V	
	OFF		—	0	—	0.8	V	
Internal/External PWM Select Voltage	HI	V_{SEL}	—	2.0	—-	5.0	V	
	LO		—	0	—	0.8	V	
Internal PWM Control Voltage	MAX	V_{IPWM}	V_{SEL} = L	2.85	3.0	3.15	V	maximum duty ratio
	MIN			—	0	—	V	minimum duty ratio
External PWM Control Voltage	HI	V_{EPWM}	V_{SEL} = H	2.0	—	5.0	V	duty on
	LO			0	—	0.8	V	duty off
VBL Rising Time	Tr1	—	—	30	—	50	ms	See as below
VBL Falling Time	Tf1	—	—	30	—	50	ms	
Control Signal Rising Time		Tr	—	—	—	100	ms	
Control Signal Falling Time		Tf	—	—	—	100	ms	
PWM Signal Rising Time		T_{PWMR}	—	—	—	50	us	
PWM Signal Falling Time		T_{PWMF}	—	—	—	50	us	
PWM Delay Time		T_{PWM}	—	100	—	300	mS	
Input impedance		R_{IN}	—	1	—	—	MΩ	
BLON Delay Time		T_{on}	—	300	—	500	ms	
BLON Off Time		T_{off}	—	300	—	500	ms	

Note (1) The SEL signal should be valid before backlight turns on by BLON signal. It is inhibited to change the internal/external PWM selection (SEL) during backlight turn on period.

Note (2) The power sequence and control signal timing are shown in the following figure.

Note (3) The power sequence and control signal timing must follow the figure below. For a certain reason, the inverter has a possibility to be damaged with wrong power sequence and control signal timing.

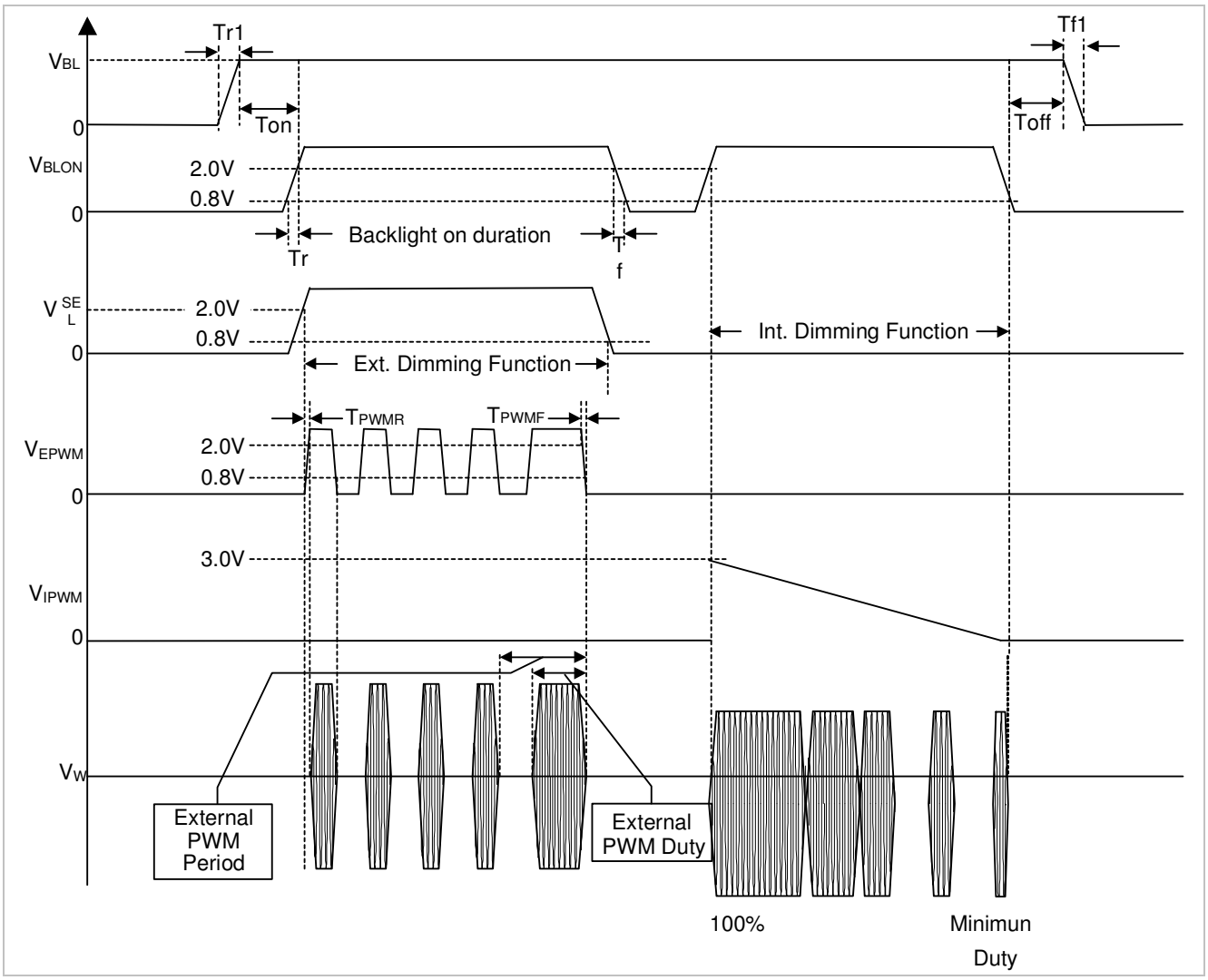
Tr1
Tf1
VBL
0
Ton
Toff
VBLON
2.0V
0.8V
0
Backlight on duration
Tr
Tf
V SEL
2.0V
0.8V
0
Int. Dimming Function
Ext. Dimming Function
TPWMR
TPWMF
VEPWM
2.0V
0.8V
0
3.0V
VIPWM
0
VW
External PWM Period
External PWM Duty
100%
Minimun Duty

4. BLOCK DIAGRAM OF INTERFACE

4.1 TFT LCD MODULE

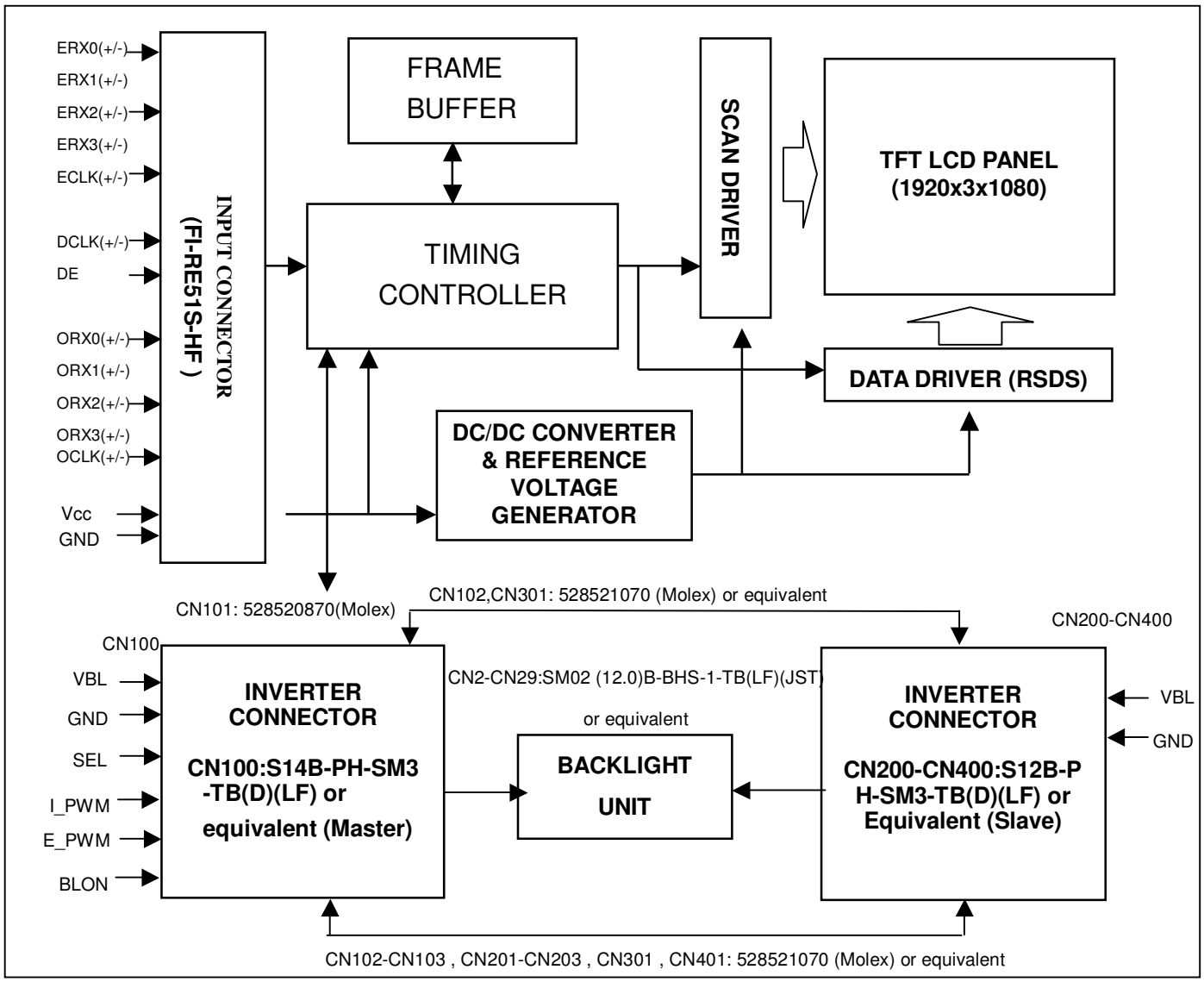

5. INPUT TERMINAL PIN ASSIGNMENT

5.1 TFT LCD Module

Pin	Name	Description	Note
1	VCC	+12V power supply	
2	VCC	+12V power supply	
3	VCC	+12V power supply	
4	VCC	+12V power supply	
5	VCC	+12V power supply	
6	GND	Ground	
7	GND	Ground	
8	GND	Ground	
9	GND	Ground	
10	ERX0-	Even pixel Negative LVDS differential data input. Channel 0	
11	ERX0+	Even pixel Positive LVDS differential data input. Channel 0	
12	ERX1-	Even pixel Negative LVDS differential data input. Channel 1	
13	ERX1+	Even pixel Positive LVDS differential data input. Channel 1	
14	ERX2-	Even pixel Negative LVDS differential data input. Channel 2	
15	ERX2+	Even pixel Positive LVDS differential data input. Channel 2	
16	GND	Ground	
17	ECLK-	Even pixel Negative LVDS differential clock input.	
18	ECLK+	Even pixel Positive LVDS differential clock input.	
19	GND	Ground	
20	ERX3-	Even pixel Negative LVDS differential data input. Channel 3	
21	ERX3+	Even pixel Positive LVDS differential data input. Channel 3	
22	N.C.	No Connection	(2)
23	N.C.	No Connection	
24	GND	Ground	
25	ORX0-	Odd pixel, Negative LVDS differential data input. Channel 0	
26	ORX0+	Odd pixel, Positive LVDS differential data input. Channel 0	
27	ORX1-	Odd pixel, Negative LVDS differential data input. Channel 1	
28	ORX1+	Odd pixel, Positive LVDS differential data input. Channel 1	
29	ORX2-	Odd pixel, Negative LVDS differential data input. Channel 2	
30	ORX2+	Odd pixel, Positive LVDS differential data input. Channel 2	
31	GND	Ground	
32	OCLK-	Odd pixel, Negative LVDS differential clock input	
33	OCLK+	Odd pixel, Positive LVDS differential clock input.	
34	GND	Ground	
35	ORX3-	Odd pixel, Negative LVDS differential data input. Channel 3	
36	ORX3+	Odd pixel, Positive LVDS differential data input. Channel 3	
37	N.C.	No Connection	(2)
38	N.C.	No Connection	
39	GND	Ground	
40	ODSEL	Overdrive Lookup Table Selection	(5)
41	DCREN	Dynamic Contrast Ratio Enable	(6)
42	N.C.	No Connection	(2)
43	RPF	Display Rotation	(4)
44	N.C.	No Connection	(2)
45	SELLVDS	LVDS Data Format Selection	(3)
46	N.C.	No Connection	(2)
47	N.C.	No Connection	
48	N.C.	No Connection	

49	N.C.	No Connection	(2)
50	N.C.	No Connection	
51	N.C.	No Connection	

Note(1) Connector part no. : FI-RE51S-HF (JAE) or equivalent.

Note (2) Please be reserved to open.

Note (3) Low : JEIDA LVDS Format (default), High : VESA Format.

Note (4) Low : normal display (default), High : display with 180 degree rotation

Note(5) Overdrive lookup table selection. The overdrive lookup table should be selected in accordance to the frame rate to optimize image quality.

ODSEL	Note
L	Lookup table was optimized for 60 Hz frame rate.
H	Lookup table was optimized for 50 Hz frame rate.

Note (6) Low : function disable (default), High : Dynamic Contrast Ratio function enable.

Note (7) Low =Open or Connect to GND, High = Connect to +3.3V

5.2 BACKLIGHT UNIT

The pin configuration for the housing and the leader wire is shown in the table below.

CN3-CN26: CP042CSC000 (CviLux).

Pin	Name	Description	Wire Color
1	HV	High Voltage	Pink
2	HV	High Voltage	White

Note (1) The backlight interface housing for high voltage side is a model CP042CSC000, manufactured by CviLux. The mating header on inverter part number is CP042CP1MC0

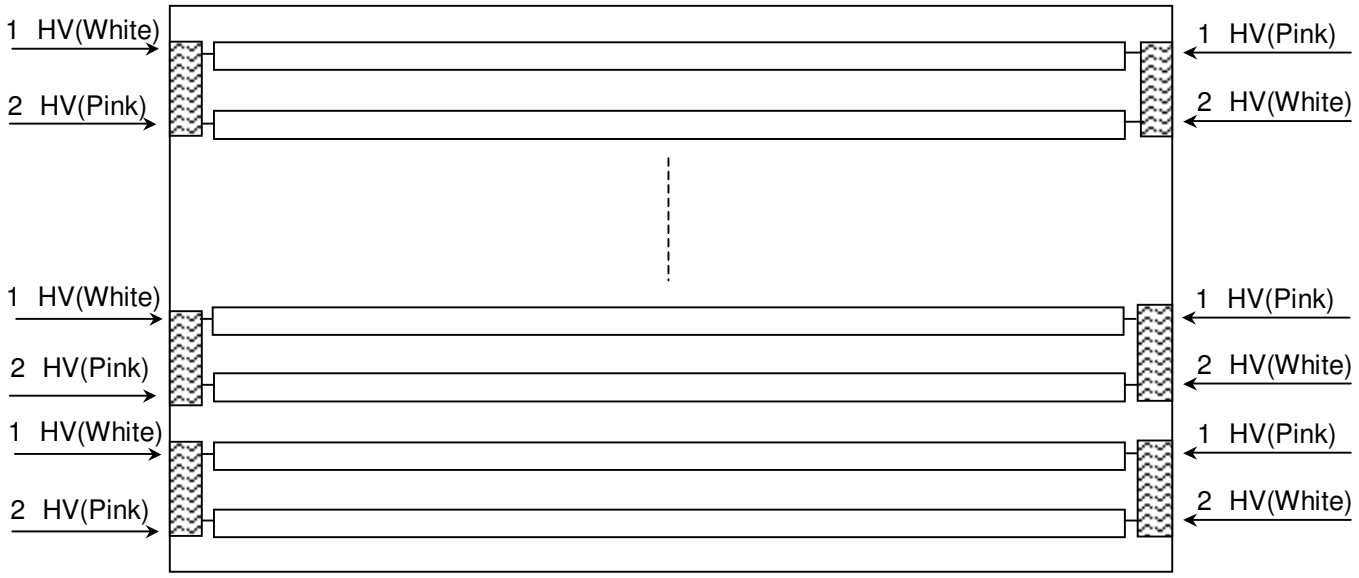

5.3 INVERTER UNIT

CN100 (Header): S14B-PH-SM3-TB (D)(LF)(JST) or equivalent.

Pin No.	Symbol	Description
1	VBL	+24V_{DC} power input
2		
3		
4		
5		
6	GND	GND
7		
8		
9		
10		
11	SEL	Internal/external PWM selection High : external dimming Low : internal dimming
12	E_PWM	External PWM control signal E_PWM should be connected to ground when internal PWM was selected (SEL = Low).
13	I_PWM	Internal PWM Control Signal I_PWM should be connected to ground when external PWM was selected (SEL = High).
14	BLON	Backlight on/off control

CN200-CN400 (Header): S12B-PH-SM3-TB (D)(LF)(JST) or equivalent.

Pin No.	Symbol	Description
1	VBL	+24V_{DC} power input
2		
3		
4		
5		
6	GND	GND
7		
8		
9		
10		
11	NC	NC
12	NC	NC

CN2-CN29 (Header): CP042CPIMC0-LF(CviLux) or equivalent

Pin No.	Symbol	Description
1	CCFL HOT	CCFL high voltage
2	CCFL HOT	CCFL high voltage

CN102-CN103 , CN201-CN203 , CN301 , CN401 : 528521070(Molex)

Pin No.	Symbol	Description
1	Control Signal	Board to Board
2		Board to Board
3		Board to Board
4		Board to Board
5		Board to Board
6		Board to Board
7		Board to Board
8		Board to Board
9		Board to Board
10		Board to Board

CN101: 528520870(Molex)

Pin No.	Symbol	Description
1	Control Signal	Board to Board
2		Board to Board
3		Board to Board
4		Board to Board
5		Board to Board
6		Board to Board
7		Board to Board
8		Board to Board

Note (1) Floating of any control signal is not allowed.

5.4 BLOCK DIAGRAM OF INTERFACE

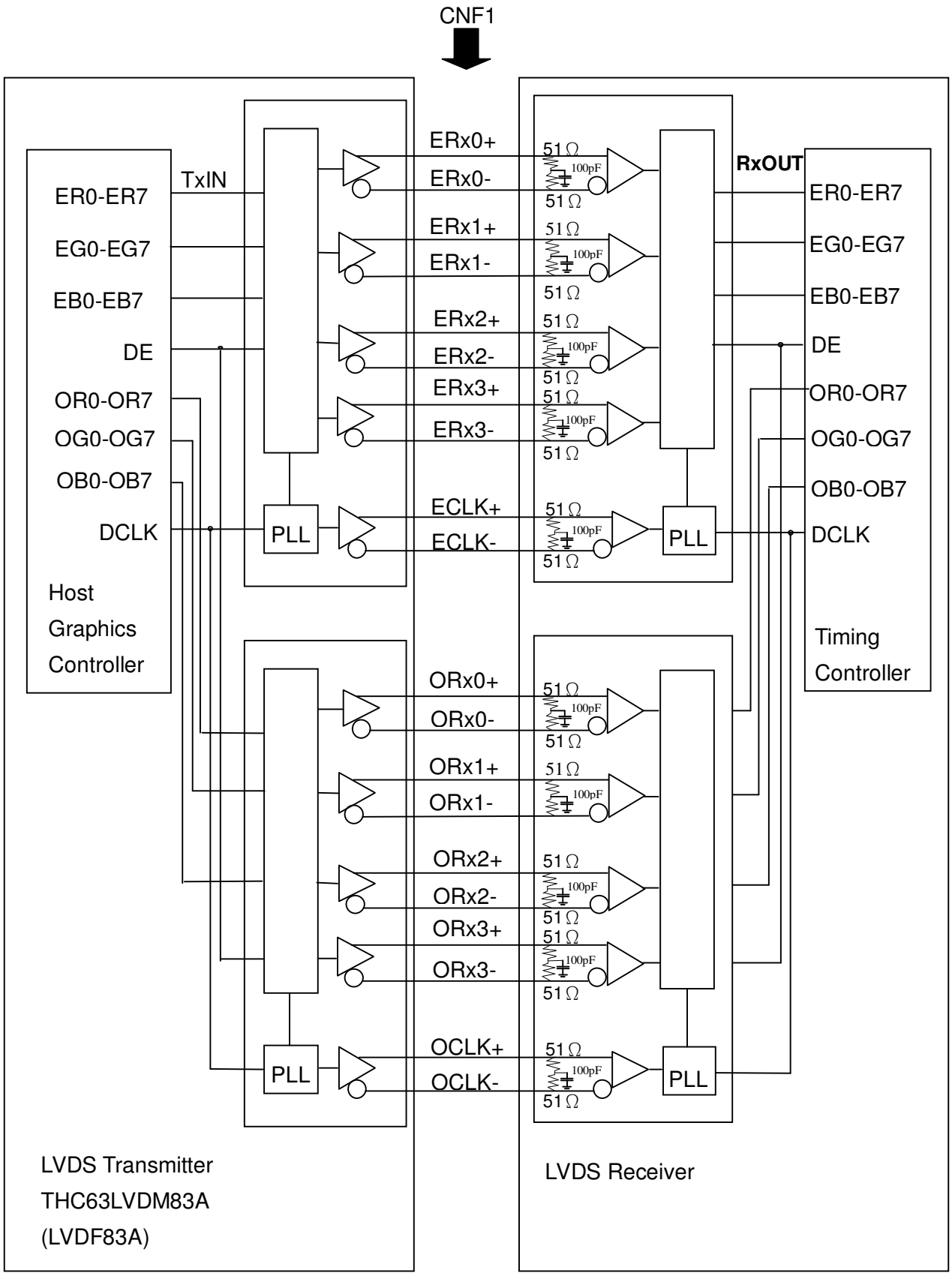

ER0~ER7 : Even pixel R data
EG0~EG7 : Even pixel G data
EB0~EB7 : Even pixel B data
OR0~OR7 : Odd pixel R data
OG0~OG7: Odd pixel G data
OB0~OB7 : Odd pixel B data
DE : Data enable signal
DCLK : Data clock signal

Notes: (1) The system must have the transmitter to drive the module.
(2) LVDS cable impedance shall be 50 ohms per signal line or about 100 ohms per twist-pair line when it is used differentially.
(3) Two pixel data send into the module for every clock cycle. The first pixel of the frame is even pixel and the second pixel is odd pixel.

5.5 LVDS INTERFACE

	SIGNAL		TRANSMITTER THC63LVDM83A		INTERFACE CONNECTOR		RECEIVER THC63LVDF84A		TFT CONTROL INPUT	
	LVDS_SEL =H	LVDS_SEL = L or OPEN	PIN	INPUT	Host	TFT-LCD	PIN	OUTPUT	LVDS_SEL =H	LVDS_SEL = L or OPEN
24bit	R0	R2	51	TxIN0			27	Rx OUT0	R0	R2
	R1	R3	52	TxIN1			29	Rx OUT1	R1	R3
	R2	R4	54	TxIN2	TA OUT0+	Rx 0+	30	Rx OUT2	R2	R4
	R3	R5	55	TxIN3			32	Rx OUT3	R3	R5
	R4	R6	56	TxIN4			33	Rx OUT4	R4	R6
	R5	R7	3	TxIN6	TA OUT0-	Rx 0-	35	Rx OUT6	R5	R7
	G0	G2	4	TxIN7			37	Rx OUT7	G0	G2
	G1	G3	6	TxIN8			38	Rx OUT8	G1	G3
	G2	G4	7	TxIN9			39	Rx OUT9	G2	G4
	G3	G5	11	TxIN12	TA OUT1+	Rx 1+	43	Rx OUT12	G3	G5
	G4	G6	12	TxIN13			45	Rx OUT13	G4	G6
	G5	G7	14	TxIN14			46	Rx OUT14	G5	G7
	B0	B2	15	TxIN15	TA OUT1-	Rx 1-	47	Rx OUT15	B0	B2
	B1	B3	19	TxIN18			51	Rx OUT18	B1	B3
	B2	B4	20	TxIN19			53	Rx OUT19	B2	B4
	B3	B5	22	TxIN20			54	Rx OUT20	B3	B5
	B4	B6	23	TxIN21	TA OUT2+	Rx 2+	55	Rx OUT21	B4	B6
	B5	B7	24	TxIN22			1	Rx OUT22	B5	B7
	DE	DE	30	TxIN26			6	Rx OUT26	DE	DE
	R6	R0	50	TxIN27	TA OUT2-	Rx 2-	7	Rx OUT27	R6	R0
	R7	R1	2	TxIN5			34	Rx OUT5	R7	R1
	G6	G0	8	TxIN10			41	Rx OUT10	G6	G0
	G7	G1	10	TxIN11			42	Rx OUT11	G7	G1
	B6	B0	16	TxIN16	TA OUT3+	Rx 3+	49	Rx OUT16	B6	B0
	B7	B1	18	TxIN17			50	Rx OUT17	B7	B1
	RSVD 1	RSVD 1	25	TxIN23			2	Rx OUT23	NC	NC
	RSVD 2	RSVD 2	27	TxIN24	TA OUT3-	Rx 3-	3	Rx OUT24	NC	NC
	RSVD 3	RSVD 3	28	TxIN25			5	Rx OUT25	NC	NC
	DCLK		31	TxCLK IN	TxCLK OUT+ TxCLK OUT-	RxCLK IN+ RxCLK IN-	26	RxCLK OUT	DCLK	

R0~R7: Pixel R Data (7; MSB, 0; LSB)

G0~G7: Pixel G Data (7; MSB, 0; LSB)

B0~B7: Pixel B Data (7; MSB, 0; LSB)

DE : Data enable signal

DCLK : Data clock signal

Notes: (1) RSVD (reserved) pins on the transmitter shall be “H” or “L”.

5.6 COLOR DATA INPUT ASSIGNMENT

The brightness of each primary color (red, green and blue) is based on the 8-bit gray scale data input for the color. The higher the binary input, the brighter the color. The table below provides the assignment of the color versus data input.

Color		Data Signal																							
		Red								Green								Blue							
		R7	R6	R5	R4	R3	R2	R1	R0	G7	G6	G5	G4	G3	G2	G1	G0	B7	B6	B5	B4	B3	B2	B1	B0
Basic Colors	Black	0	0	0	0	0	0	0	0	0	0	0	0	0	0	0	0	0	0	0	0	0	0	0	0
	Red	1	1	1	1	1	1	1	1	0	0	0	0	0	0	0	0	0	0	0	0	0	0	0	0
	Green	0	0	0	0	0	0	0	0	1	1	1	1	1	1	1	1	0	0	0	0	0	0	0	0
	Blue	0	0	0	0	0	0	0	0	0	0	0	0	0	0	0	0	1	1	1	1	1	1	1	1
	Cyan	0	0	0	0	0	0	0	0	1	1	1	1	1	1	1	1	1	1	1	1	1	1	1	1
	Magenta	1	1	1	1	1	1	1	1	0	0	0	0	0	0	0	0	1	1	1	1	1	1	1	1
	Yellow	1	1	1	1	1	1	1	1	1	1	1	1	1	1	1	1	0	0	0	0	0	0	0	0
	White	1	1	1	1	1	1	1	1	1	1	1	1	1	1	1	1	1	1	1	1	1	1	1	1
Gray Scale Of Red	Red (0) / Dark	0	0	0	0	0	0	0	0	0	0	0	0	0	0	0	0	0	0	0	0	0	0	0	0
	Red (1)	0	0	0	0	0	0	0	1	0	0	0	0	0	0	0	0	0	0	0	0	0	0	0	0
	Red (2)	0	0	0	0	0	0	1	0	0	0	0	0	0	0	0	0	0	0	0	0	0	0	0	0
	:	:	:	:	:	:	:	:	:	:	:	:	:	:	:	:	:	:	:	:	:	:	:	:	:
	:	:	:	:	:	:	:	:	:	:	:	:	:	:	:	:	:	:	:	:	:	:	:	:	:
	Red (253)	1	1	1	1	1	1	0	1	0	0	0	0	0	0	0	0	0	0	0	0	0	0	0	0
	Red (254)	1	1	1	1	1	1	1	0	0	0	0	0	0	0	0	0	0	0	0	0	0	0	0	0
	Red (255)	1	1	1	1	1	1	1	1	0	0	0	0	0	0	0	0	0	0	0	0	0	0	0	0
Gray Scale Of Green	Green (0) / Dark	0	0	0	0	0	0	0	0	0	0	0	0	0	0	0	0	0	0	0	0	0	0	0	0
	Green (1)	0	0	0	0	0	0	0	0	0	0	0	0	0	0	0	1	0	0	0	0	0	0	0	0
	Green (2)	0	0	0	0	0	0	0	0	0	0	0	0	0	0	1	0	0	0	0	0	0	0	0	0
	:	:	:	:	:	:	:	:	:	:	:	:	:	:	:	:	:	:	:	:	:	:	:	:	:
	:	:	:	:	:	:	:	:	:	:	:	:	:	:	:	:	:	:	:	:	:	:	:	:	:
	Green (253)	0	0	0	0	0	0	0	0	1	1	1	1	1	1	0	1	0	0	0	0	0	0	0	0
	Green (254)	0	0	0	0	0	0	0	0	1	1	1	1	1	1	1	0	0	0	0	0	0	0	0	0
	Green (255)	0	0	0	0	0	0	0	0	1	1	1	1	1	1	1	1	0	0	0	0	0	0	0	0
Gray Scale Of Blue	Blue (0) / Dark	0	0	0	0	0	0	0	0	0	0	0	0	0	0	0	0	0	0	0	0	0	0	0	0
	Blue (1)	0	0	0	0	0	0	0	0	0	0	0	0	0	0	0	0	0	0	0	0	0	0	0	1
	Blue (2)	0	0	0	0	0	0	0	0	0	0	0	0	0	0	0	0	0	0	0	0	0	0	1	0
	:	:	:	:	:	:	:	:	:	:	:	:	:	:	:	:	:	:	:	:	:	:	:	:	:
	:	:	:	:	:	:	:	:	:	:	:	:	:	:	:	:	:	:	:	:	:	:	:	:	:
	Blue (253)	0	0	0	0	0	0	0	0	0	0	0	0	0	0	0	0	1	1	1	1	1	1	0	1
	Blue (254)	0	0	0	0	0	0	0	0	0	0	0	0	0	0	0	0	1	1	1	1	1	1	1	0
	Blue (255)	0	0	0	0	0	0	0	0	0	0	0	0	0	0	0	0	1	1	1	1	1	1	1	1

Note (1) 0: Low Level Voltage, 1: High Level Voltage

6. INTERFACE TIMING

6.1 INPUT SIGNAL TIMING SPECIFICATIONS

The input signal timing specifications are shown as the following table and timing diagram.

Signal	Item	Symbol	Min.	Typ.	Max.	Unit	Note
LVDS Receiver Clock	Frequency	1/Tc	60	74	80	MHz	-
	Input cycle to cycle jitter	Trcl	-	-	200	ps	-
LVDS Receiver Data	Setup Time	Tlvsu	600	-	-	ps	
	Hold Time	Tlvhd	600	-	-	ps	
Vertical Active Display Term	Frame Rate	Fr_5	47	50	53	Hz	(1)
		Fr_6	57	60	63	Hz	(2)
	Total	Tv	1115	1125	1135	Th	Tv=Tvd+Tvb
	Display	Tvd	1080	1080	1080	Th	-
	Blank	Tvb	35	45	55	Th	-
Horizontal Active Display Term	Total	Th	2100	2200	2300	Tc	Th=Thd+Thb
	Display	Thd	1920	1920	1920	Tc	-
	Blank	Thb	180	280	380	Tc	-

Note (1) (ODSEL) = (H). Please refer to 5.1 for detail information.

(2) (ODSEL) = (L). Please refer to 5.1 for detail information.

INPUT SIGNAL TIMING DIAGRAM

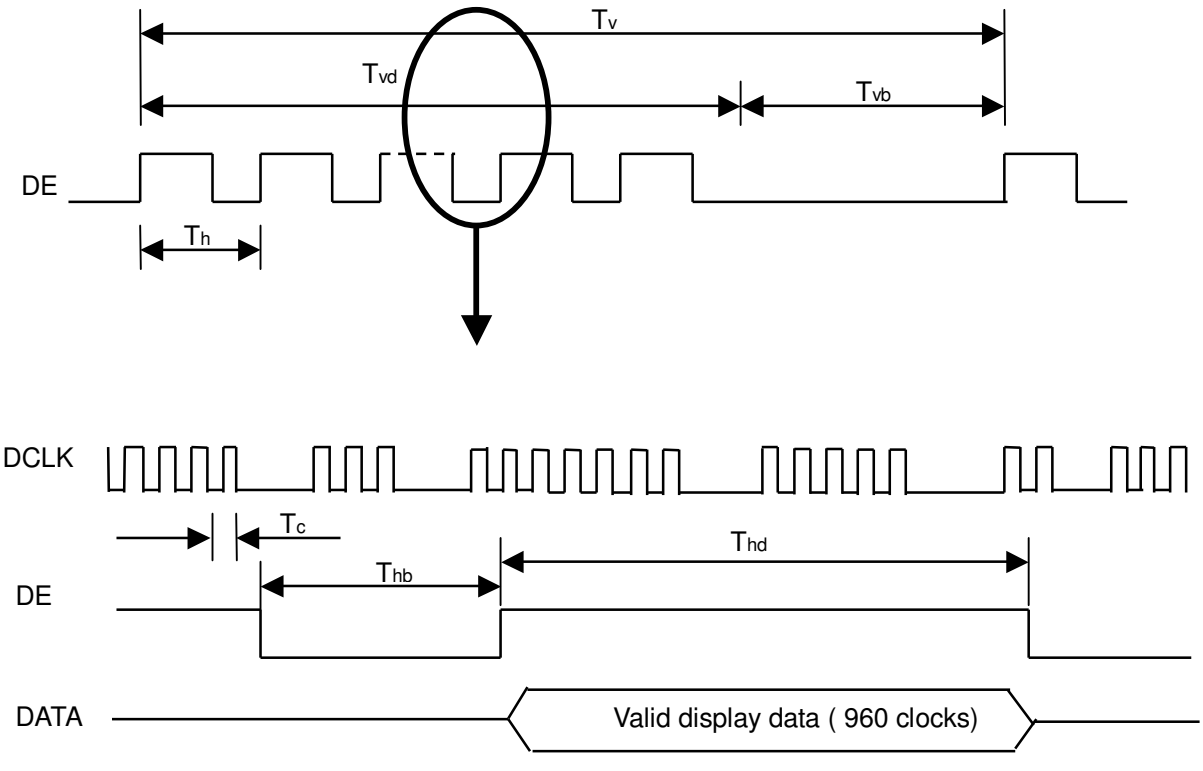

LVDS INPUT INTERFACE TIMING DIAGRAM

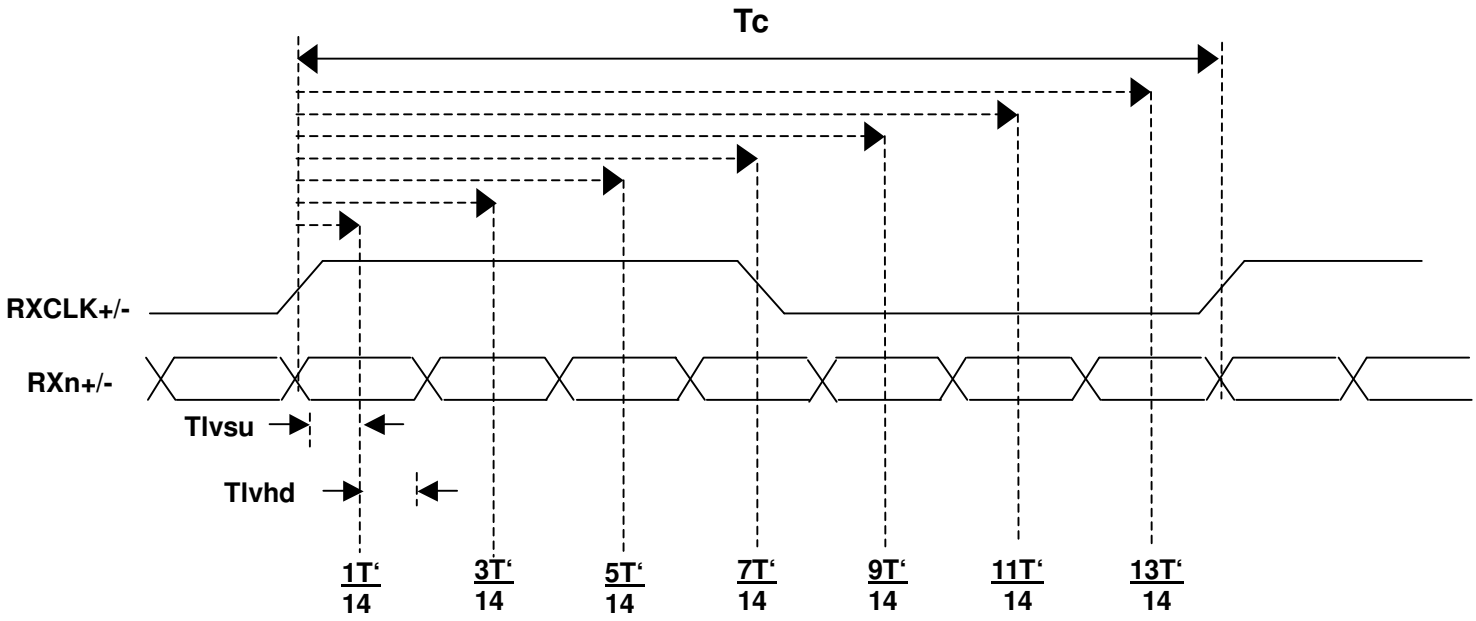

6.2 POWER ON/OFF SEQUENCE

To prevent a latch-up or DC operation of LCD module, the power on/off sequence should follow the diagram below.

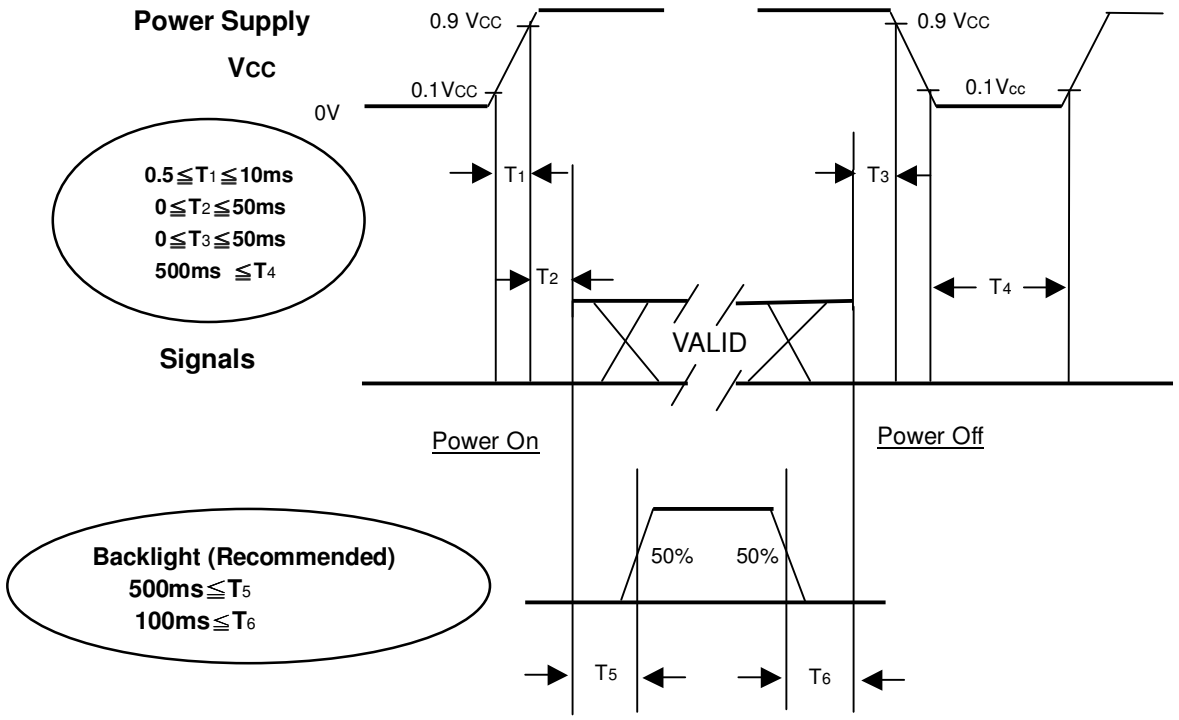

Power ON/OFF Sequence

Note.

(1) The supply voltage of the external system for the module input should follow the definition of Vcc.

(2) Apply the lamp voltage within the LCD operation range. When the backlight turns on before the LCD operation or the LCD turns off before the backlight turns off, the display may momentarily become abnormal screen.

(3) In case of VCC is in off level, please keep the level of input signals on the low or high impedance.

(4) T4 should be measured after the module has been fully discharged between power off and on period.

(5) Interface signal shall not be kept at high impedance when the power is on.

7. OPTICAL CHARACTERISTICS

7.1 TEST CONDITIONS

Item	Symbol	Value	Unit
Ambient Temperature	Ta	25±2	°C
Ambient Humidity	Ha	50±10	%RH
Supply Voltage	V_{CC}	12V	V
Input Signal	According to typical value in "3. ELECTRICAL CHARACTERISTICS"		
Lamp Current	I_L	5.5±0.5	mA
Oscillating Frequency (Inverter)	F_W	50±3	KHz
Vertical Frame Rate	Fr	60	Hz

7.2 OPTICAL SPECIFICATIONS

The relative measurement methods of optical characteristics are shown in 7.2. The following items should be measured under the test conditions described in 7.1 and stable environment shown in Note (6).

Item		Symbol	Condition	Min.	Typ.	Max.	Unit	Note
Contrast Ratio		CR	θ_x=0°, θ_Y =0° Viewing Angle at Normal Direction	1200	1500		-	Note (2)
		Dynamic CR			6000			
Response Time		Gray to gray			6.5	12	ms	Note (3)
Center Luminance of White		L_C		400	500		cd/m^2	Note (4)
White Variation		δW				1.3	-	Note (7)
Cross Talk		CT				4	%	Note (5)
Color Chromaticity	Red	Rx		Typ. -0.03	0.639	Typ. +0.03	-	Note (6)
		Ry			0.334		-	
	Green	Gx			0.269		-	
		Gy			0.591		-	
	Blue	Bx			0.143		-	
		By			0.068		-	
	White	Wx			0.280		-	
		Wy			0.285		-	
	Color Gamut	C.G			72		%	NTSC
Viewing Angle	Horizontal	θ_x+	CR≥20	80	88		Deg.	Note (1)
		θ_x-		80	88			
	Vertical	θ_Y+		80	88			
		θ_Y-		80	88			

Note (1) Definition of Viewing Angle (θx, θy):

Viewing angles are measured by Eldim EZ-Contrast 160R

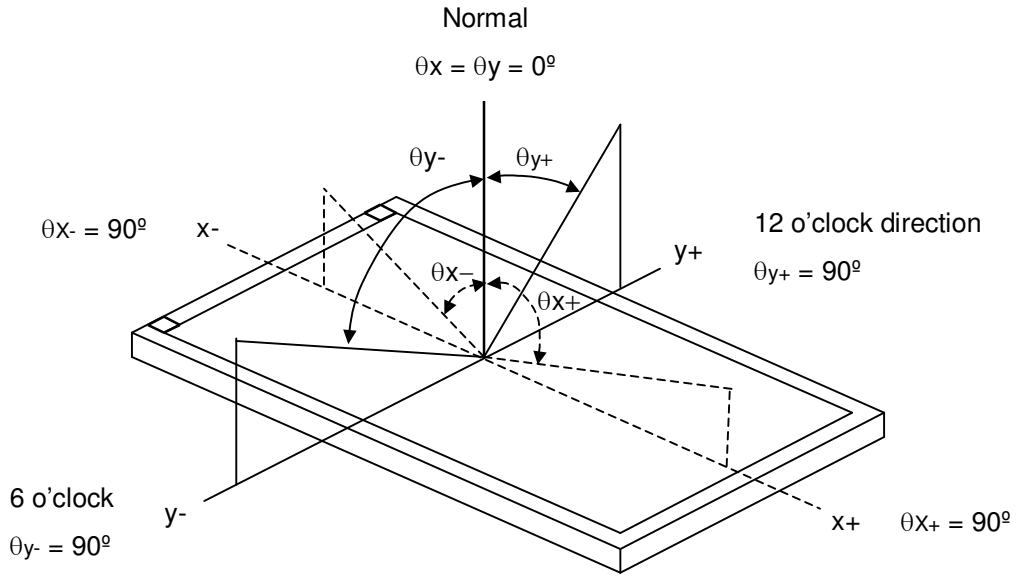

Note (2) Definition of Contrast Ratio (CR):

The contrast ratio can be calculated by the following expression.

$$\text{Contrast Ratio (CR)} = \frac{\text{Surface Luminance with all white pixels}}{\text{Surface Luminance with all black pixels}}$$

CR = CR (5), where CR (X) is corresponding to the Contrast Ratio of the point X at the figure in Note (7).

The measured value will be "Dynamic CR" only when the function of dynamic contrast ratio is enabled.

Note (3) Definition of Gray-to-Gray Switching Time:

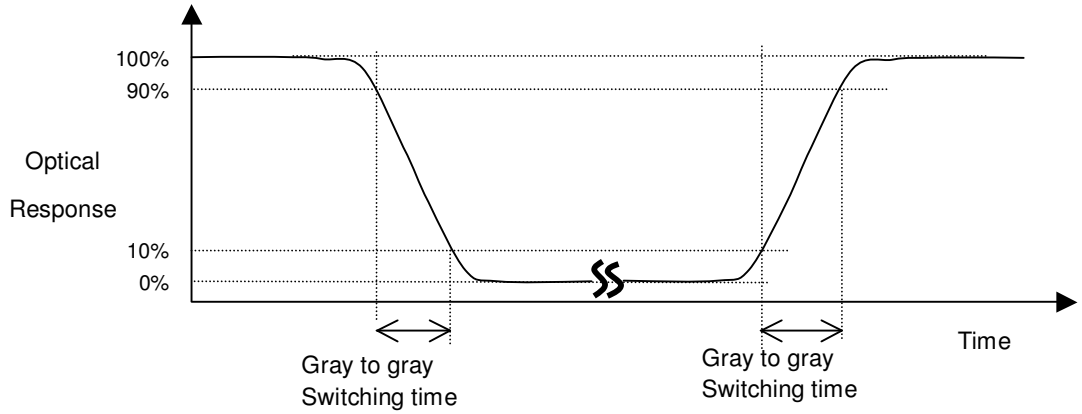

The driving signal means the signal of gray level 0, 63, 127, 191, and 255.

Gray to gray average time means the average switching time of gray level 0, 63,127,191,255 to each other.

Note (4) Definition of Luminance of White (L_C):

Measure the luminance of gray level 255 at center point.

L_C = L (5), where L (x) is corresponding to the luminance of the point X at the figure in Note (7).

Note (5) Definition of Cross Talk (CT):

$CT = | Y_B - Y_A | / Y_A \times 100$ (%)

Where:

Y_A = Luminance of measured location without gray level 0 pattern (cd/m^2)

Y_B = Luminance of measured location with gray level 0 pattern (cd/m^2)

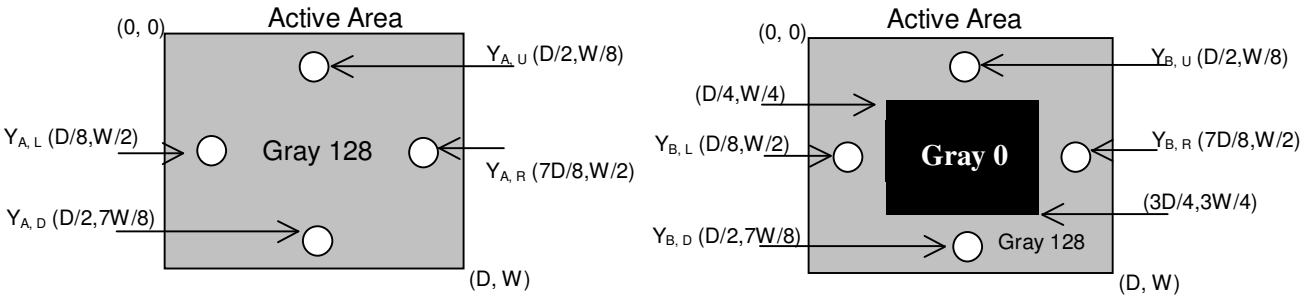

Note (6) Measurement Setup:

The LCD module should be stabilized at given temperature for 1 hour to avoid abrupt temperature change during measuring. In order to stabilize the luminance, the measurement should be executed after lighting backlight for 1 hour in a windless room.

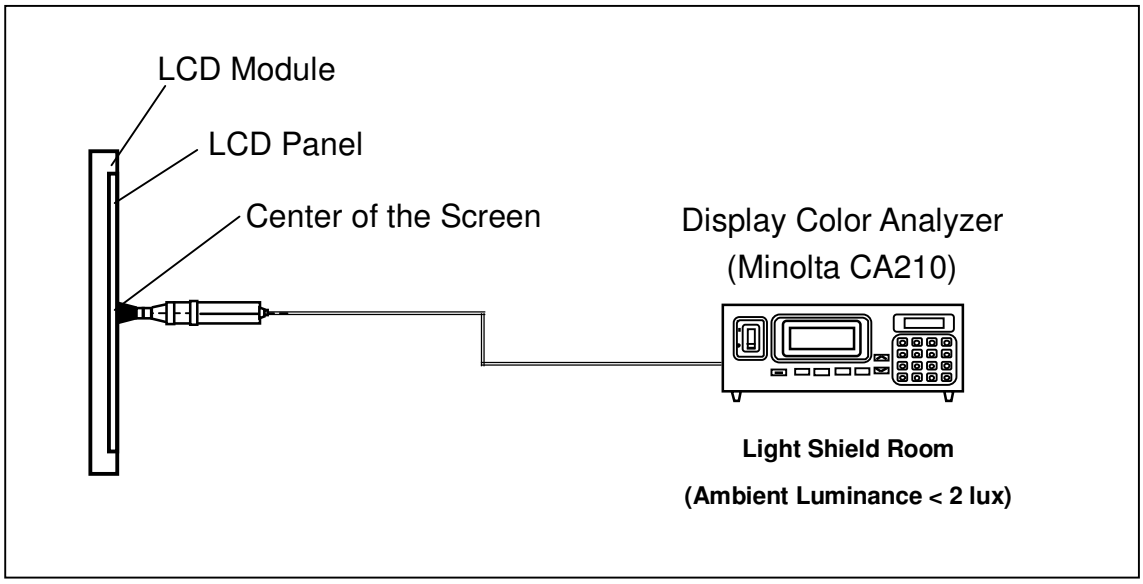

Note (7) Definition of White Variation (δW):

Measure the luminance of gray level 255 at 5 points

δW = Maximum [L (1), L (2), L (3), L (4), L (5)] / Minimum [L (1), L (2), L (3), L (4), L (5)]

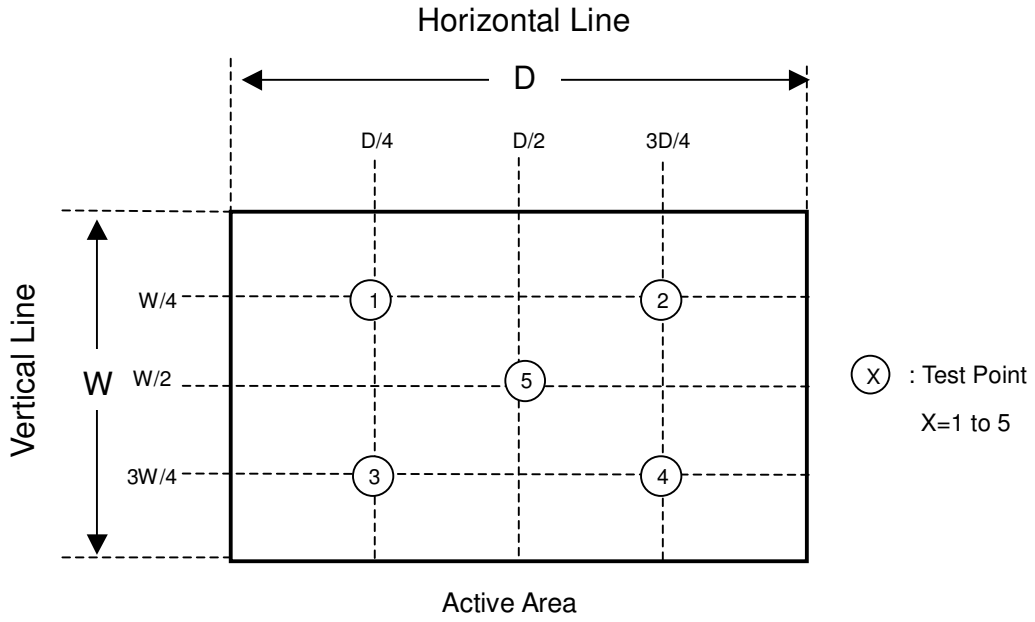

8. PRECAUTIONS

8.1 ASSEMBLY AND HANDLING PRECAUTIONS

(1) Do not apply rough force such as bending or twisting to the module during assembly.

(2) It is recommended to assemble or to install a module into the user's system in clean working areas. The dust and oil may cause electrical short or worsen the polarizer.

(3) Do not apply pressure or impulse to the module to prevent the damage of LCD panel and Backlight.

(4) Always follow the correct power-on sequence when the LCD module is turned on. This can prevent the damage and latch-up of the CMOS LSI chips.

(5) Do not plug in or pull out the I/F connector while the module is in operation.

(6) Do not disassemble the module.

(7) Use a soft dry cloth without chemicals for cleaning, because the surface of polarizer is very soft and easily scratched.

(8) Moisture can easily penetrate into LCD module and may cause the damage during operation.

(9) High temperature or humidity may deteriorate the performance of LCD module. Please store LCD modules in the specified storage conditions.

(10) When ambient temperature is lower than 10ºC, the display quality might be reduced. For example, the response time will become slow, and the starting voltage of CCFL will be higher than that of room temperature.

8.2 SAFETY PRECAUTIONS

(1) The startup voltage of a Backlight is approximately 1000 Volts. It may cause an electrical shock while assembling with the inverter. Do not disassemble the module or insert anything into the Backlight unit.

(2) If the liquid crystal material leaks from the panel, it should be kept away from the eyes or mouth. In case of contact with hands, skin or clothes, it has to be washed away thoroughly with soap.

(3) After the module's end of life, it is not harmful in case of normal operation and storage.

9. REGULATORY STANDARDS

9.1 SAFETY

Regulatory	Item	Standard
Information Technology equipment	UL	UL 60950-1: 2003
	cUL	CAN/CSA C22.2 No.60950-1-03
	CB	IEC 60950-1:2001
Audio/Video Apparatus	UL	UL 60065: 2003
	cUL	CAN/CSA C22.2 No.60065-03
	CB	IEC 60065:2001

10. PACKAGING

10.1 PACKING SPECIFICATIONS

(1) 2 LCD TV modules / 1 Box

(2) Box dimensions : 1334(L) X 284 (W) X 856 (H)

(3) Weight : approximately 47.5Kg (2 modules per box)

10.2 PACKING METHOD

Figures 10-1 and 10-2 are the packing method

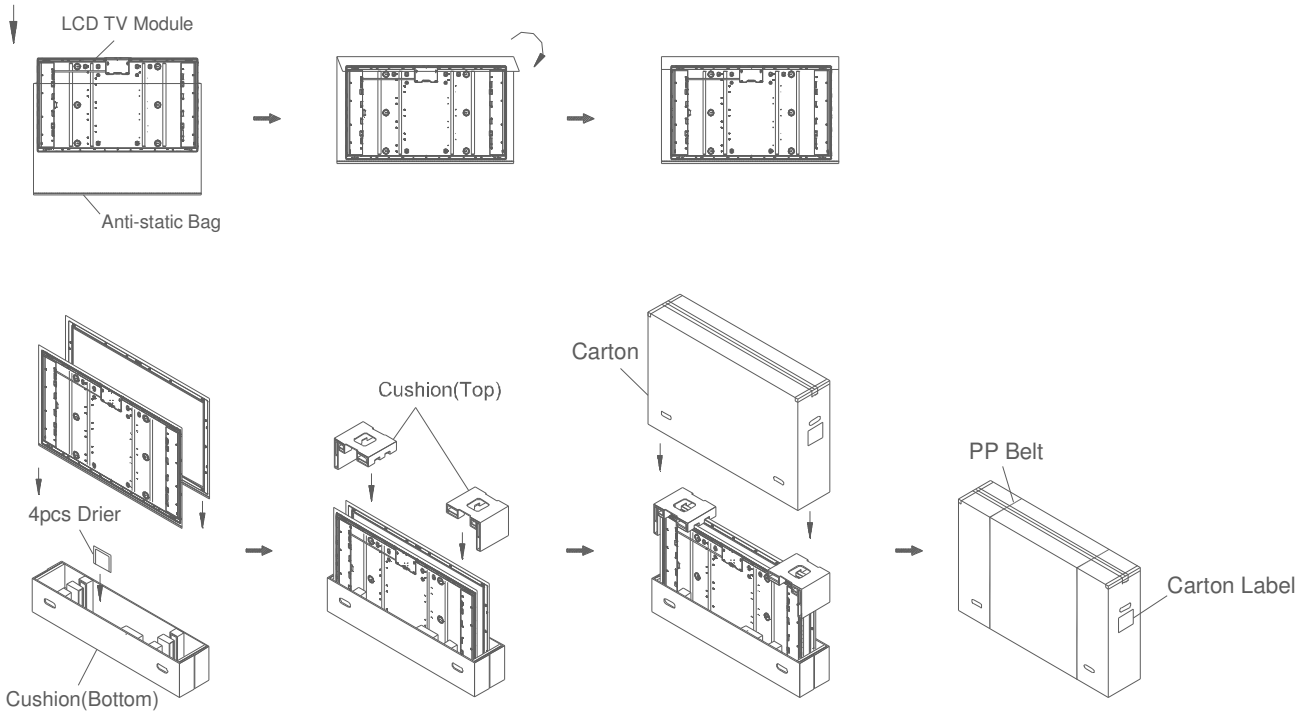

Figure.10-1 packing method

Sea Transportation

Corner Protector:L1780*50mm*50mm
Corner Protector:L1130*50mm*50mm
Pallet:L1150*W1345*H140mm
Pallet Stack:L1150*W1345*H1852mm
Gross: 400 kg

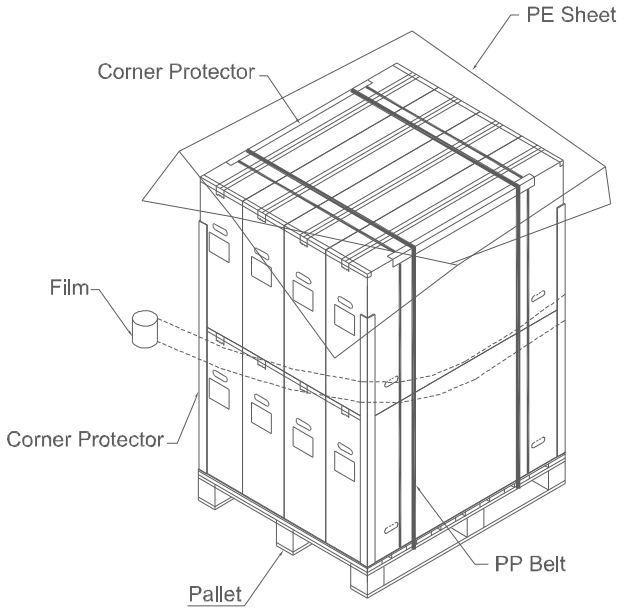

Air Transportation

Corner Protector:L800*50mm*50mm
Corner Protector:L1130*50mm*50mm
Pallet:L1150*W1345*H140mm
Pallet Stack:L1150*W1345*H996mm
Gross: 210 kg

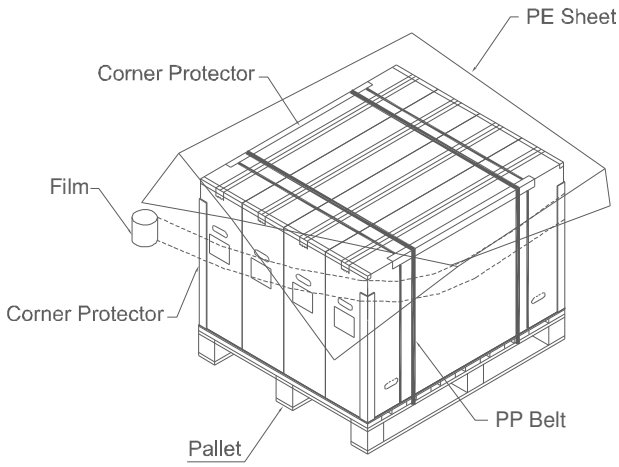

Figure. 10-2 Packing method

11. MECHANICAL CHARACTERISTIC

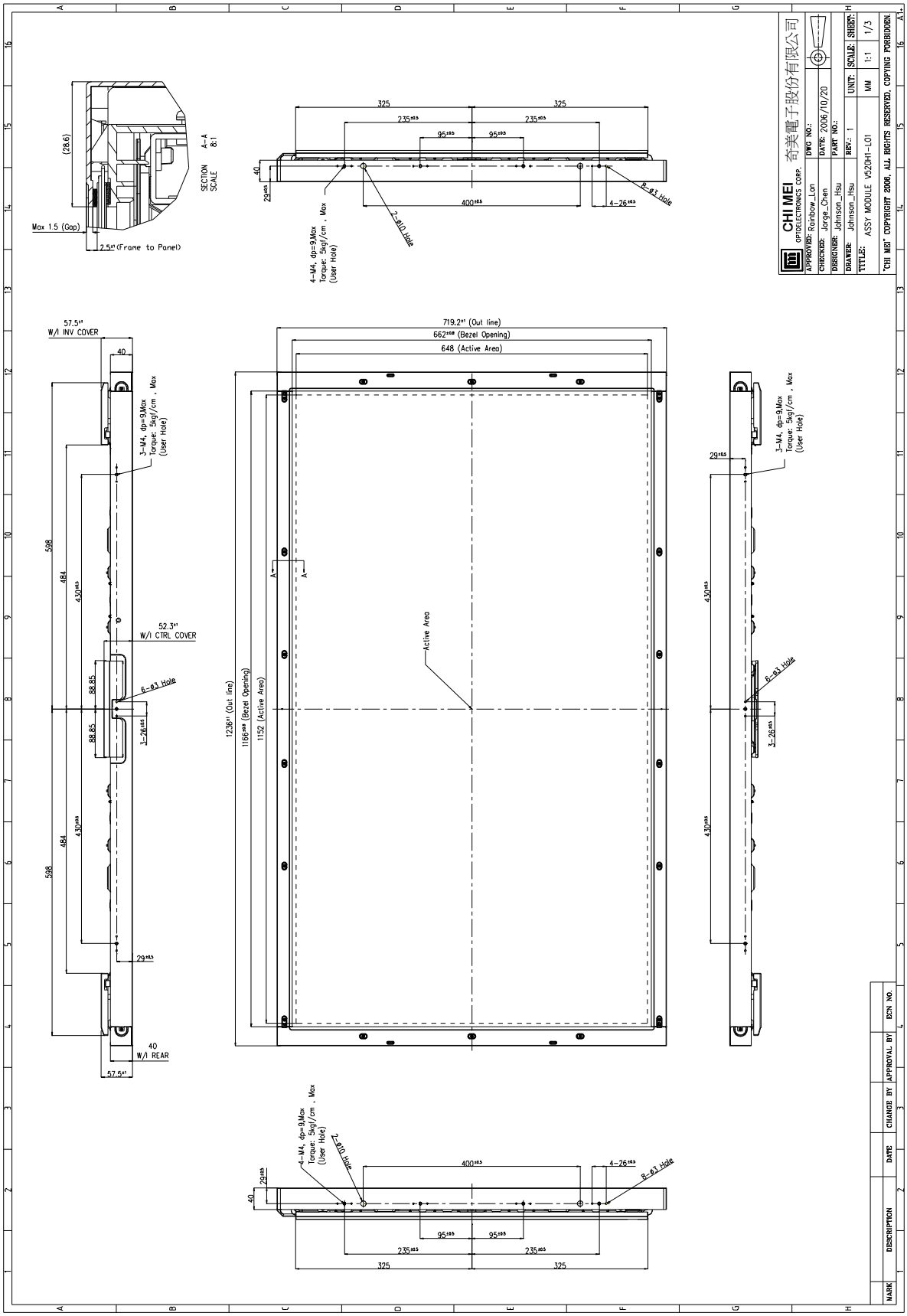

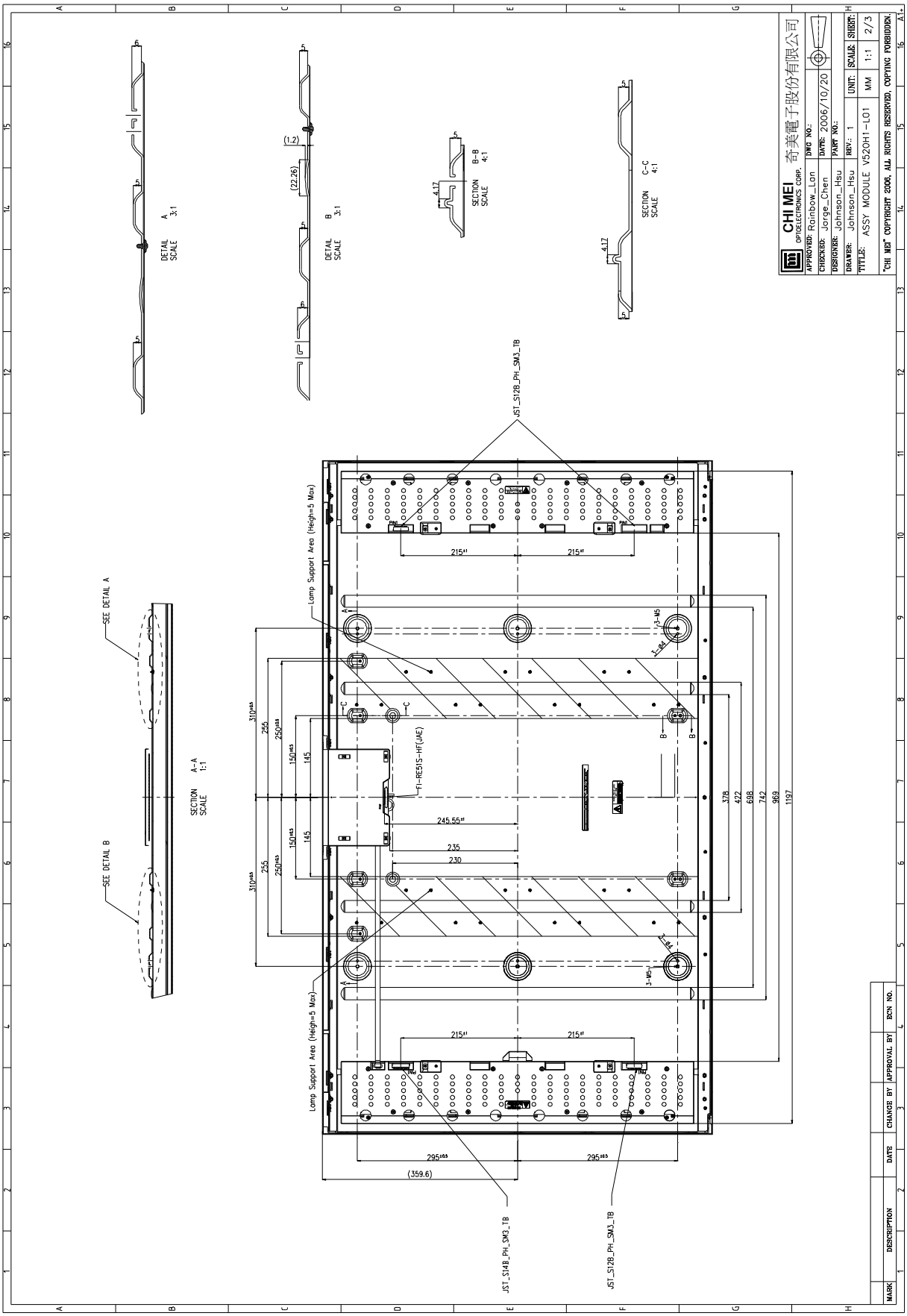
CHI MEI OPTOELECTRONICS CORP.
奇美電子股份有限公司
APPROVED: Rainbow_Lan
CHECKED: Jorge_Chen
DESIGNER: Johnson_Hsu
DRAWER: Johnson_Hsu
DWG NO.:
DATE: 2006/10/20
PART NO.:
REV.: 1
TITLE: ASSY MODULE V520H1-L01
UNIT: MM
SCALE: 1:1
SHEET: 2/3
"CHI MEI" COPYRIGHT 2006, ALL RIGHTS RESERVED, COPYING FORBIDDEN.
DETAIL A SCALE 3:1
DETAIL B SCALE 3:1
SECTION B-B SCALE 4:1
SECTION C-C SCALE 4:1
SECTION A-A SCALE 1:1
SEE DETAIL A
SEE DETAIL B
Lamp Support Area (Heigh=5 Max)
JST_S12B_PH_SM3_TB
JST_S14B_PH_SM3_TB
FI-RE51S-HF(JAE)
215±1
245.55±1
235
230
295±0.5
(359.6)
310±0.5
255
250±0.5
150±0.5
145
378
422
698
742
969
1197
MARK
DESCRIPTION
DATE
CHANGE BY
APPROVAL BY
ECN NO.

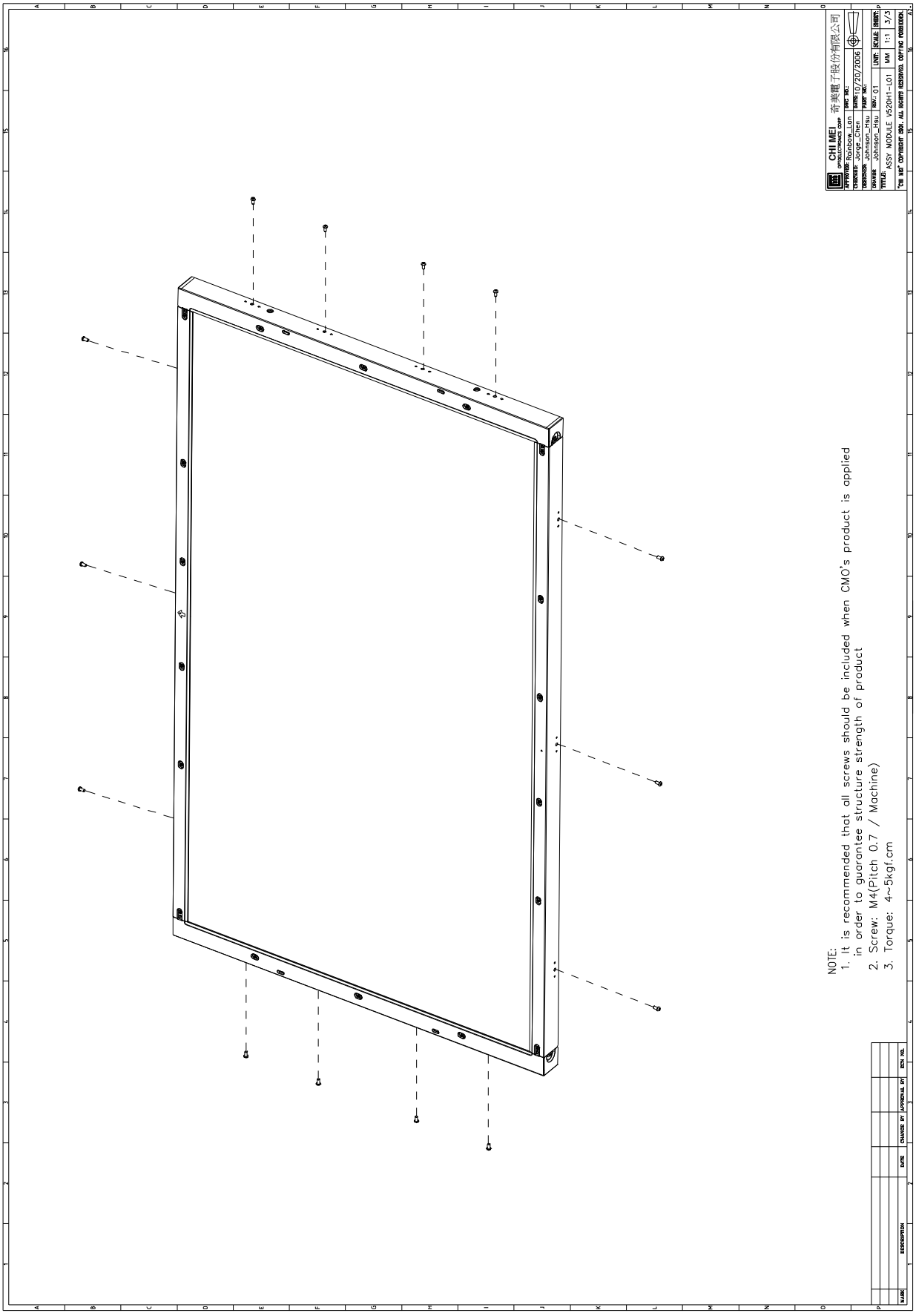
NOTE:
1. It is recommended that all screws should be included when CMO's product is applied in order to guarantee structure strength of product
2. Screw: M4(Pitch 0.7 / Machine)
3. Torque: 4~5kgf.cm