Version :0.3

TECHNICAL SPECIFICATION

MODEL NO. : ED060SCM

The content of this information is subject to be changed without notice.
Please contact E Ink or its agent for further information.

☐Customer's Confirmation

Customer _____

Date _____

By _____

☐E Ink's Confirmation

Dep	PM	FAE	Panel Design	Electronic Design	Mechanical Design	Product Verification	Prepared by
SIGN	金道敏 6/16	鄭	林勝隆 6/16'11	鄭 楊	潘	傅	侯

Revision History

Rev.	Issued Date	Revised Contents
0.1	March.30.2011	Preliminary
0.2	April .8.2011	Page 5 4.Mechanical Drawing of EPD Module Modify barcode label location Glass sensor FPC width
0.3	June. 13 2011	Page 4 3.Mechanical Specifications Add Module weight 57±5g Page 5 4.Mechanical Drawing of EPD Module Add AG Film Size Page 8 6.Touch Panel Characteristics Modify Pin7、8 Modify 6-2)~6-5) all Page 17 6-7)Integration Design Guide Add Page 18 7-2)DC Characteristics Add Panel power and the max power pattern Page 25 9.Optical characteristics Add Reflectance (MIN)30 (TYP)35 Contrast Ratio (MIN)9 (TYP)11 Page 29 12.Bar code definition Add TYT FAB5:G ;TYT FAB4:H EPD model code:E5 Page 31 13.Border definition Delete Page 31 14.Packing Add

TECHNICAL SPECIFICATION

CONTENTS

1. Application

The display is a TFT active matrix electrophoretic display, with associated interface and control logic, and a reference system design.

The 6" active area contains 600 x 800 pixels, the display is capable to display images at 2-16 gray levels (1-4 bits) depending on the display controller and the associated waveform file used.

2. Features

- High contrast TFT electrophoretic
- 600 x 800 display
- High reflectance
- Ultra wide viewing angle
- Ultra low power consumption
- Pure reflective mode
- Bi-stable
- Commercial temperature range
- Landscape, portrait mode
- Antiglare hard-coated front-surface
- Module with two fingers capacitive touch sensor.
- Touchpad Module trace number (Tx * Ty):18×13

3. Mechanical Specifications

Parameter	Specifications	Unit	Remark
Screen Size	6.0 (3:4 diagonal)	Inch	
Display Resolution	600 (H)×800(V)	Pixel	
Active Area	90.6 (H)×122.4 (V)	mm	
Pixel Pitch	0.151 (H)×0.153 (V)	mm	
Pixel Configuration	Rectangle		
Outline Dimension	101.8(W)×138.4(H)×1.99(D) (Panel area height)	mm	
Module Weight	57±5	g	

4. Mechanical Drawing of EPD Module

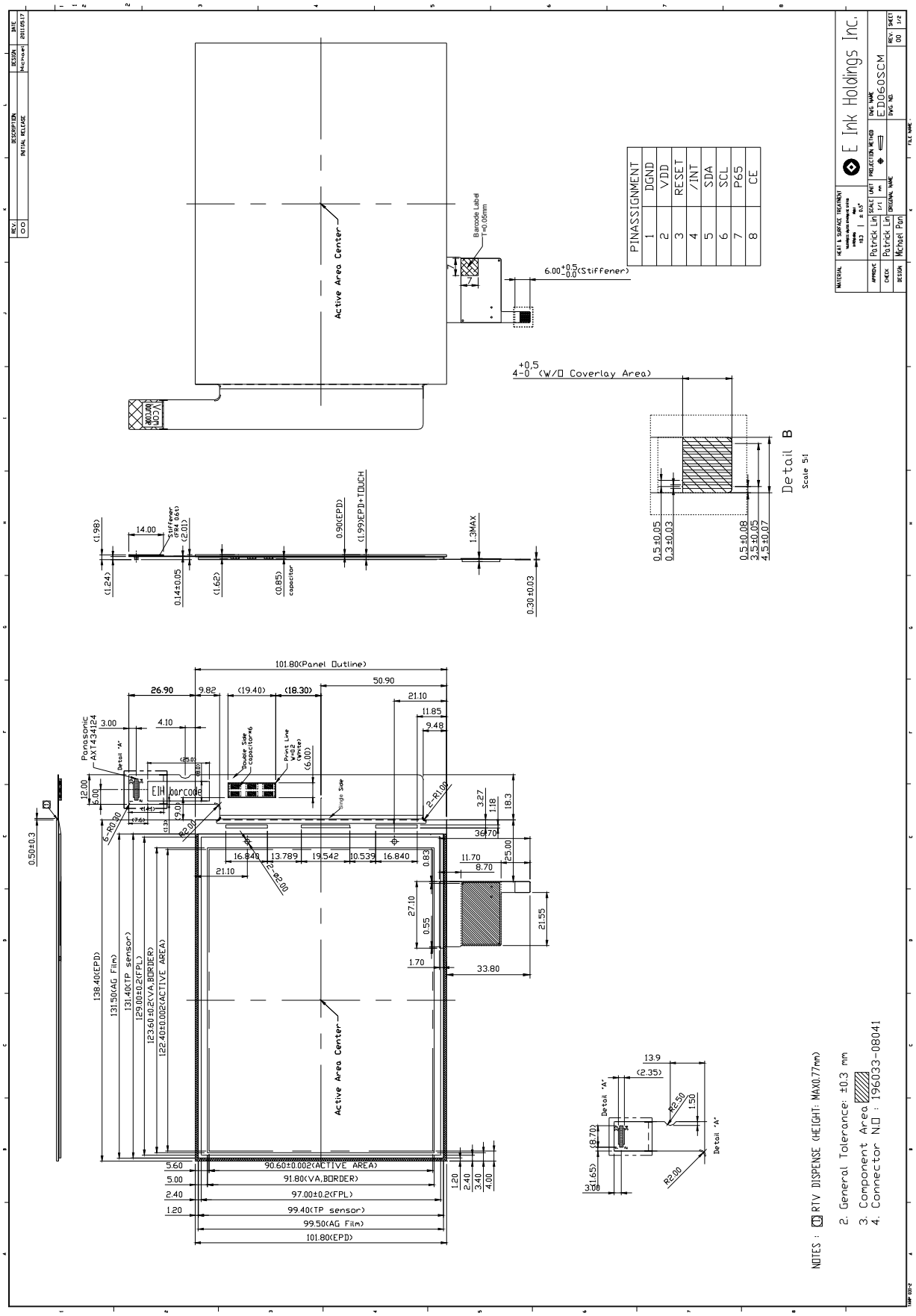

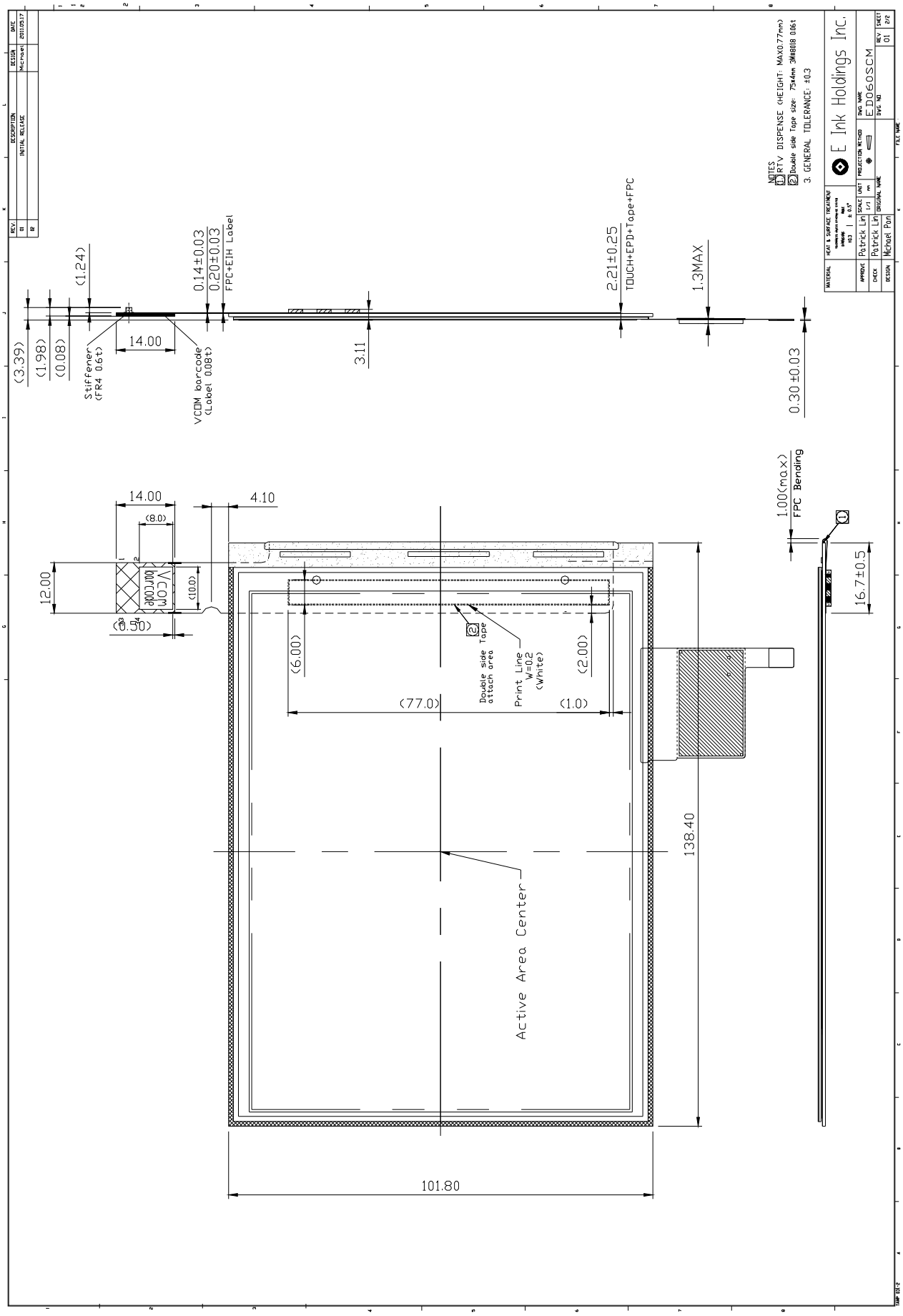

5.Input/Ouput Interface

5-1) Connector type

Pin Assignment

Pin #	Signal	Description	Remark
1	VNEG	Negative power supply source driver	
2	VPOS	Positive power supply source driver	
3	VNEG	Negative power supply source driver	
4	VPOS	Positive power supply source driver	
5	VDD	Digital power supply drivers	
6	VSS	Ground	
7	VDD	Digital power supply drivers	
8	VSS	Ground	
9	XCL	Clock source driver	
10	XLE	Latch enable source driver	
11	XOE	Output enable source driver	
12	XSTL	Start pulse source driver	
13	D0	Data signal source driver	
14	D1	Data signal source driver	
15	D2	Data signal source driver	
16	D3	Data signal source driver	
17	D4	Data signal source driver	
18	D5	Data signal source driver	
19	D6	Data signal source driver	
20	D7	Data signal source driver	
21	VCOM	Common connection	
22	NC	NC	
23	VCOM	Common connection	
24	NC	NC	
25	VGG	Positive power supply gate driver	
26	MODE1	Output mode selection gate driver	
27	VEE	Negative power supply gate driver	
28	CKV	Clock gate driver	
29	VEE	Negative power supply gate driver	
30	SPV	Start pulse gate driver	
31	VSS	Ground	
32	BORDER	Border connection	
33	NC	NC	
34	NC	NC	

6.Touch Panel Characteristics

6-1) Pin-Definition and Reference circuit:

FPC Down Connect ,8 pin , Pitch= 0.5mm , (P-Two , 196033-08041) , (Panasonic , AYF530835)

Pin	Symbol	I/O	Description
1	DGND	--	Ground
2	VDD	--	Power supply.
3	RESET	I	Reset Input. A low on this pin for resets the device.
4	/INT	O	Attention line(Typically active low, optional)
5	SDA	I/O	I2C data line.
6	SCL	I/O	I2C clock line.
7	PA3	I/O	NC pin
8	PA4	I/O	NC pin

6-2) DC Characteristics

Symbol	Description	Conditions	Min.	Typ.	Max.	Unit
VDD	Power supply voltage request	VDD including Power Ripple (which must be smaller than 100 mV).	3.0	3.3	3.6	V
I_{NORMAL}	Normal Operating current	3.3V power supply (report rate ~100Hz)	–	–	3.6	mA
I_{IDLE}	Idle Mode current	3.3V power supply	–	–	2	mA
I_{SLEEP}	Deep Sleep operating current	3.3V power supply	–	–	10	µA
V_{OL}	Output low level (Port60, Port70)	VIO= VDD	–	–	0.4VIO	V
VIH	Input high voltage level (Port60, Port70)	VIO= VDD	0.7*VIO	–	–	V
V_{IL}	Input low voltage level (Port60, Port70)	VIO= VDD	–	–	0.3*VIO	V
I_{IL}	Input pin leakage current	VIN = VDD, VSS	-10	–	10	µA

6-3) AC Characteristics

Symbol	Description	Min	Typ	Max	Unit
T_{PW}	Power-on Request (VDD 0V to 3.3V)	50	–	-	µs
$T_{INITIAL}$	Power-on to Hello Packet	–	100	–	ms

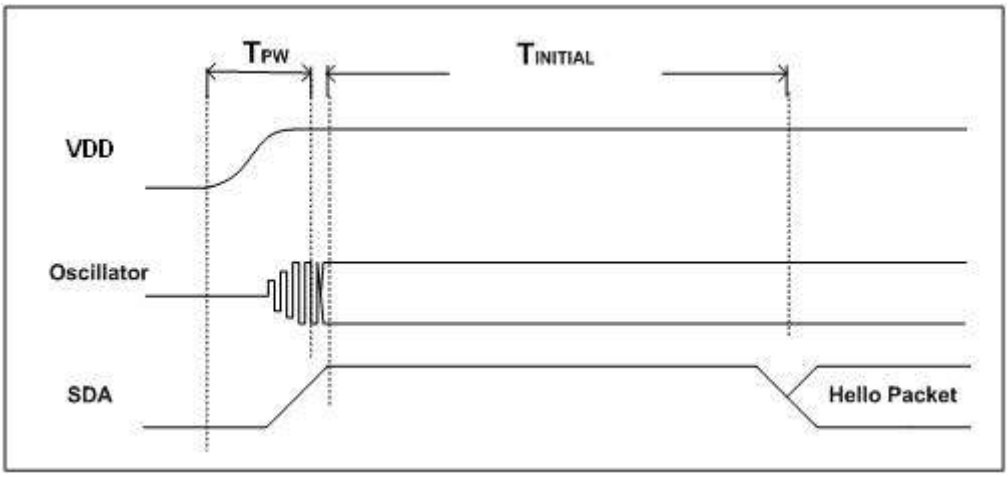

Figure 6-1 RC Power-on Initialization Timing Diagram

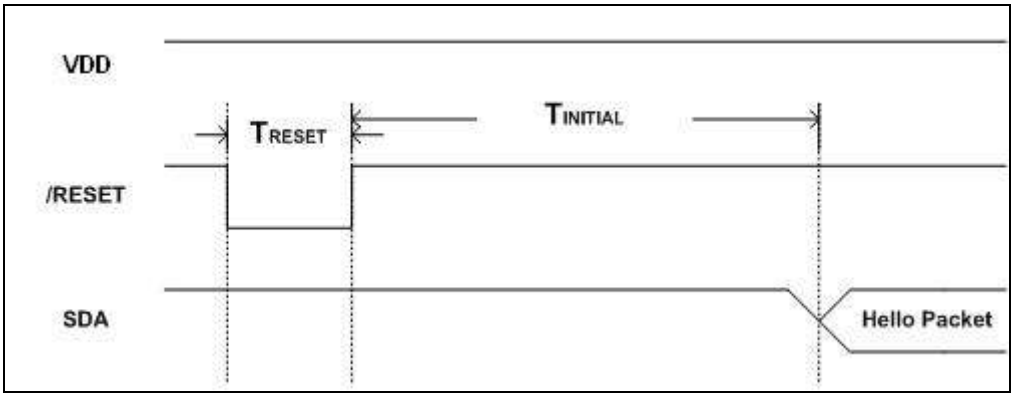

Figure 6-2 Reset Timing Diagram

Symbol	Description	Min	Typ	Max	Unit
Report rate (Normal Mode)	The frequency of report data(Normal mode,default 100Hz)	–	100	–	Hz
Scan rate (Normal Mode)	The frequency of TP scanning(Normal mode,default 160Hz)	–	160	–	Hz
Scan rate (IdleMode)	The frequency of TP scanning(Idle mode)	–	80	–	Hz

6-4) Interface

6-4.1) I²C Slave Mode

For I²C slave mode selection, the SDA, SCL, and /INT signal lines have to be pulled-high with a 4.7 KΩ resistor (See Figure6-3). When the touch pad is processing data on the I²C bus, it can be transferred at a rate of up to 100 Kbit/s in Standard mode, and 400 Kbit/s in Fast mode.

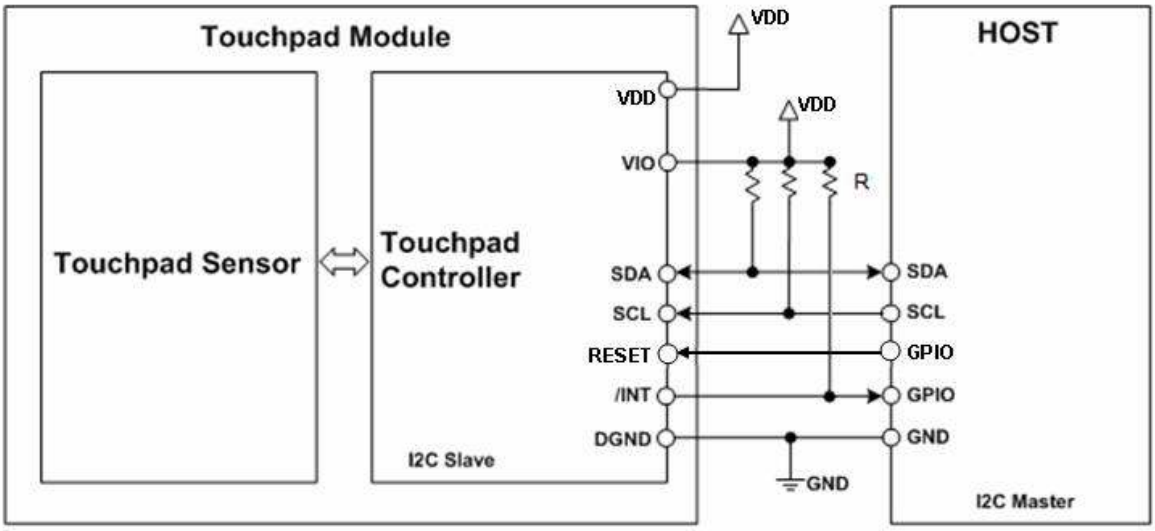

Figure 6-3 Touchpad to Host Connection in I²C Slave Mode

The data communication in I²C I²C slave mode is shown below:

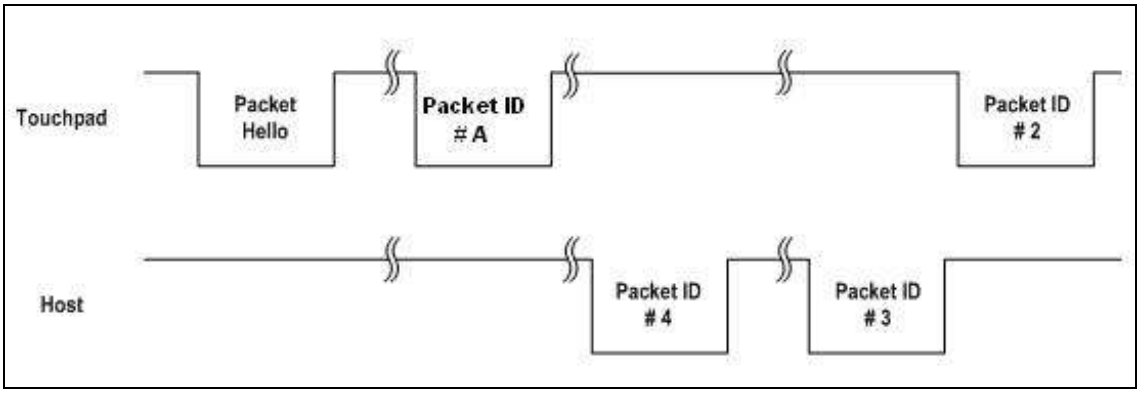

Figure6-4 Example for I²C Slave Data Communication

The touch pad can detect each change in X-Y position, and number of fingers touching the sensor. To inform the host that new data is available, will pull-low the /INT signal. When the host sends a command, the touchpad controller has to reply (Packet ID # 3). After data transmission, the touchpad controller will pull-high the /INT signal again.

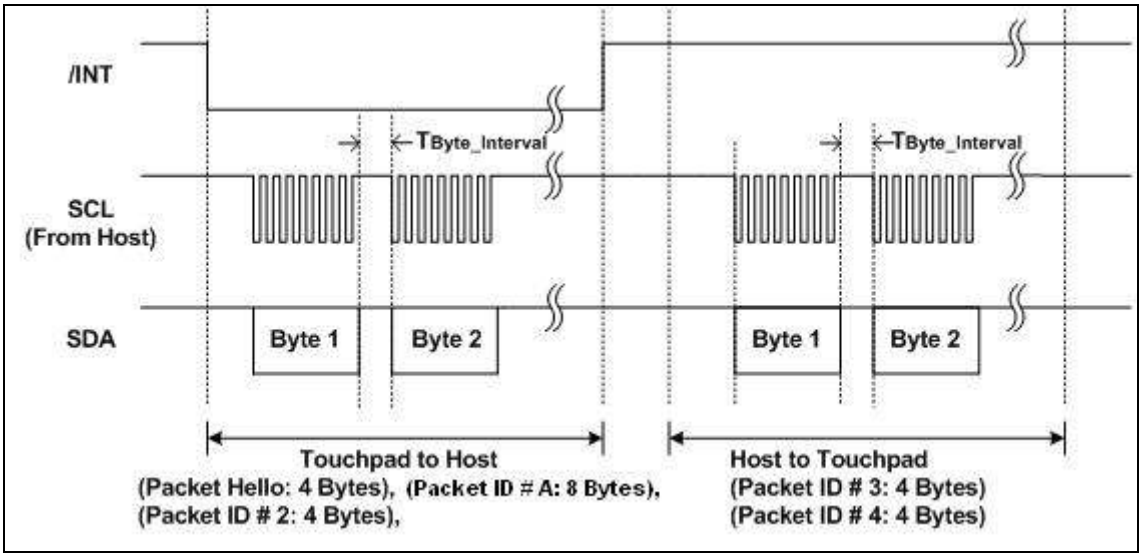

Figure 6-5 I2C slave mode timing diagram

6-4.2)I²C-Slave Timing

Figure 6-6 shows the timing condition of the I²C interface. The characteristics of I²C interface are given in Table 6-1. The touchpad adopts a bit rate of up to 400 Kbits/sec in Fast mode. The touchpad is defined as a slave I²C interface. The Host (master) generates the clock signal through the serial clock (SCL) pin and data are transferred and received through the serial data (SDA) pin.

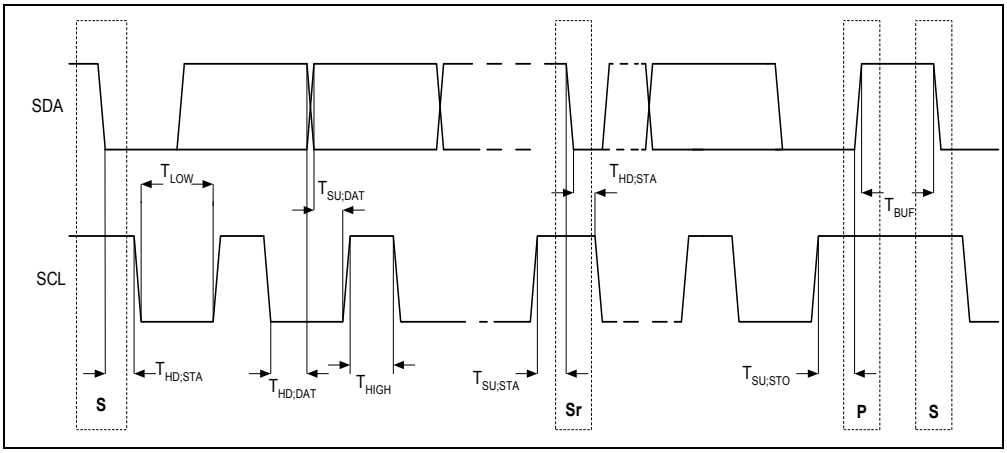

Figure 6-6 The Timing in I2C Interface

Table 6-1 Characteristics of the SDA and SCL pins for I^2C interface

Symbol	Parameter	Standard Mode		Fast Mode		Unit
		Min.	Max.	Min.	Max.	
F_{SCL}	SCL clock frequency	0	100	0	400	kHz
$T_{HD;STA}$	Hold time (repeated) Start condition. After this period, the first clock pulse is generated.	4.0	–	0.6	–	µs
T_{LOW}	Low period of the SCL clock	4.7	–	1.3	–	µs
T_{HIGH}	High period of the SCL clock	4.0	–	0.6	–	µs
$T_{SU;STA}$	Set-up time for a repeated Start condition	4.7	–	0.6	–	µs
$T_{HD;DAT}$	Data hold time	0	–	0	–	µs
$T_{SU;DAT}$	Data set-up time	250	–	100	–	ns
$T_{SU;STO}$	Set-up time for Stop condition	4.0	–	0.6	–	µs
T_{BUF}	Bus free time between a Stop and Start condition	4.7	–	1.3	–	µs

The touchpad controller is defined as a slave device of I^2C and the host is defined as a master. The device address of the touchpad controller is designed as 7-bit address format. The touchpad controller address is defined as 0x20 as shown below.

The 7-bit Addressing defined as shown below:

Address	0	0	1	0	0	0	0

According to the 7-bit addressing, the first byte after the Start procedure is shown below:

Address	0	0	1	0	0	0	0	R/W

The first seven bits of the first byte make up the address and the 8th bit is the LSB (least significant bit, R (Read) = 1 and W (Write) = 0).

The I²C detailed timing for each packet transmission is shown as follows:

a. Hello Packet: Device to host, 4 Bytes (0x55 0x55 0x55 0x55)

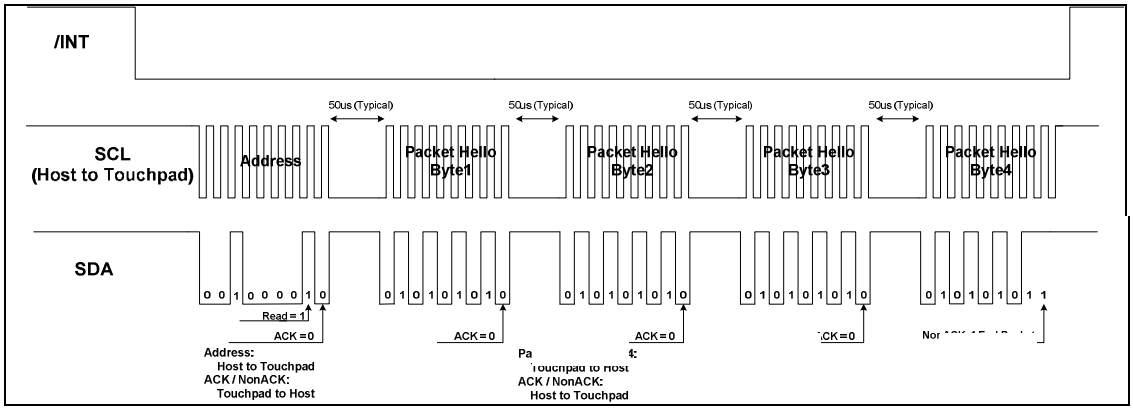

b. Read Packet: Host to device and the packet ID is 0x53.

For example: host reads the Firmware version of the touchpad, the packet is 0x53 0x00 0x00 0x01

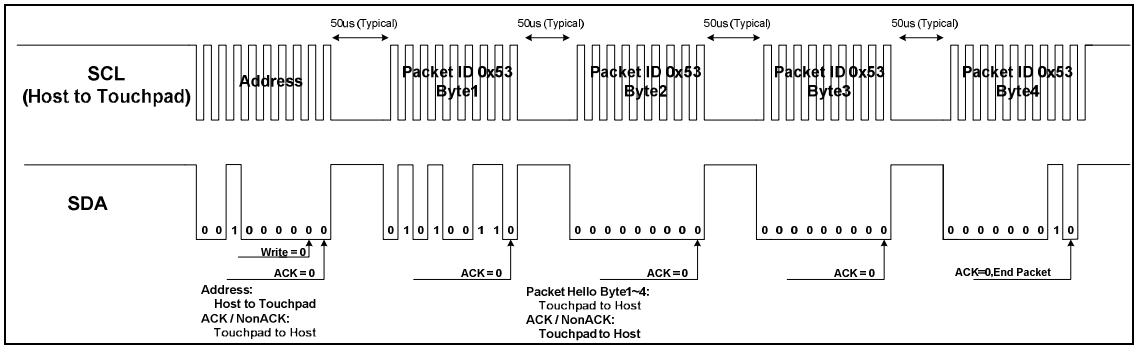

c. Write Packet: Host to device and the packet ID is 0x54.

For example: host sets the sensitivity level of the touchpad to 5, the packet is 0x54 0x45 0x00 0x01

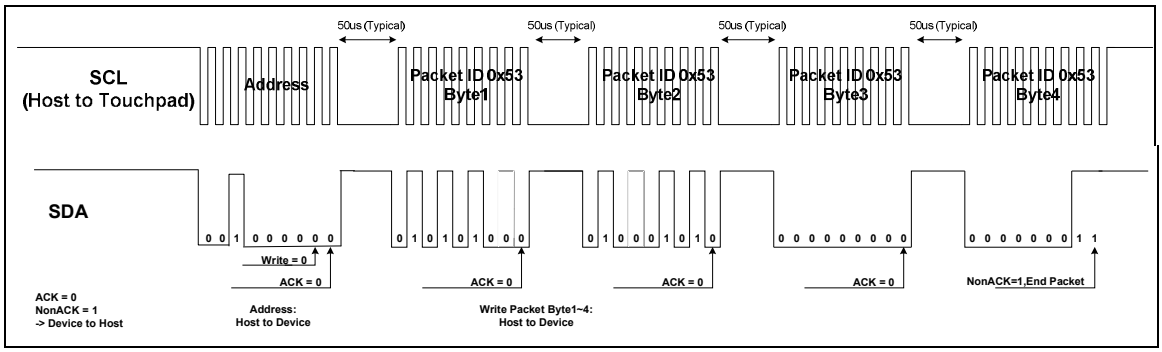

d. Response Packet: Device to host and the packet ID is 0x52.

For example: touchpad responses with the sensitivity level after a correct read sensitivity command, the packet is 0x52 0x45 0x00 0x01 (x,y-axis sensitivity level are 5 and 4)

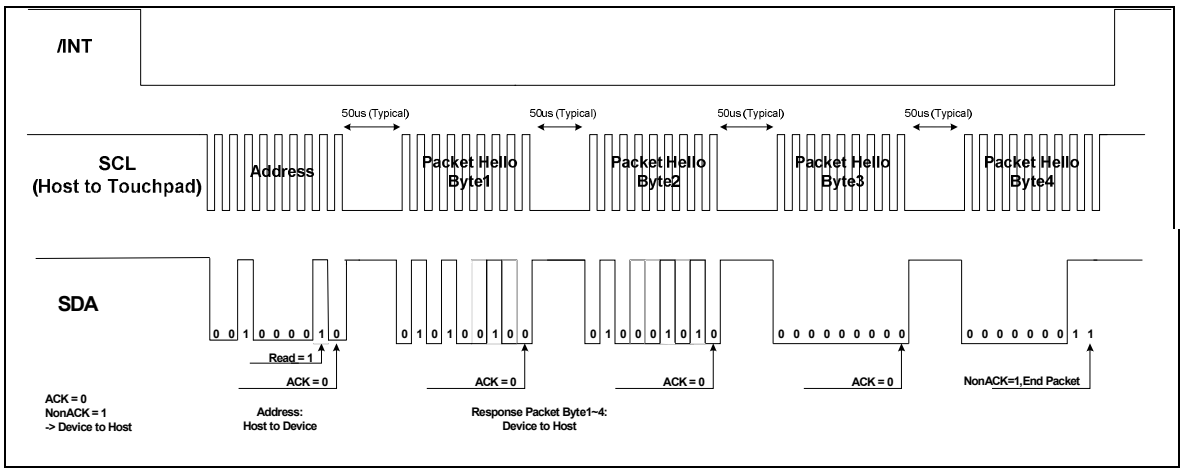

6-5) Command

6-5.1)Command List

0x55		Declare that the Touchpad is ready to work	–
0x52		Response to packet 0x53 from host.	–
0x53	0x00	Read Firmware Version	Packet 0x52
	0x50	Read Power status	Packet 0x52
	0xF0	Read Firmwre ID	Packet 0x52
0x5A		Report the absolute coordinate	–

Default response data table:

0x53	0x00	0x00	0x01	0x52 0x00 0x00 0x81 for firmware version = 0.8
	0x50			0x52 0x58 0x0A 0x01 for poewe status = Normal,100Hz
	0xF0			0x52 0xF8 0x2F 0x81 for firmware ID = 82F8

6-5.2)Hello Packet (Touchpad to Host)

01010101	01010101	01010101	01010101

After power-up and initialization, the touchpad sends the Hello Packet to declare that it is ready to work. The packet is also the first packet that the touchpad sends to the host.

6-5.3)Two-finger Mode Coordinate Packet (Touchpad to Host)

Byte 1	0	1	0	1	1	0	1	0
Byte 2	First Finger X1 High (X1 Bits 11~8)				First Finger Y1 High (Y1 Bits 11~8)			
Byte 3	First Finger X1 Low (X1 Bits 7~0)							
Byte 4	First Finger Y1 Low (Y1 Bits 7~0)							
Byte 5	Second Finger X2 High (X2 Bits 11~8)				Second Finger Y2 High (Y2 Bits 11~8)			
Byte 6	Second Finger X2 Low (X2 Bits 7~0)							
Byte 7	Second Finger Y2 Low (Y2 Bits 7~0)							
Byte 8	0	0	0	0	0	Finger 1	Finger 0	1

Packet ID: 0x5A

- ✓ X1 Position, X1 Bits 11~0: The first finger-coordinate at the X-axis.
- ✓ Y1 Position, Y1 Bits 11~0: The first finger-coordinate at the Y-axis.
- ✓ X2 Position, X2 Bits 11~0: The second finger-coordinate at the X-axis.
- ✓ Y2 Position, Y2 Bits 11~0: The second finger-coordinate at the X-axis.
- ✓ Fingers 1~0: number of fingers
  - ■ 00 = no finger
  - ■ 01 = one finger
  - ■ 10 = two fingers

When finger lifts touchpad, it sends finger up report packet with "0x5A 0x00 0x00 0x00 0x00 0x00 0x00 0x01" to host.

When the finger touches the touchpad, moves on the touchpad, all these actions will send the absolute coordinates. When one finger operates in the touchpad then releases, the touchpad will send the coordinate packet of last position. The following figure shows the timing:

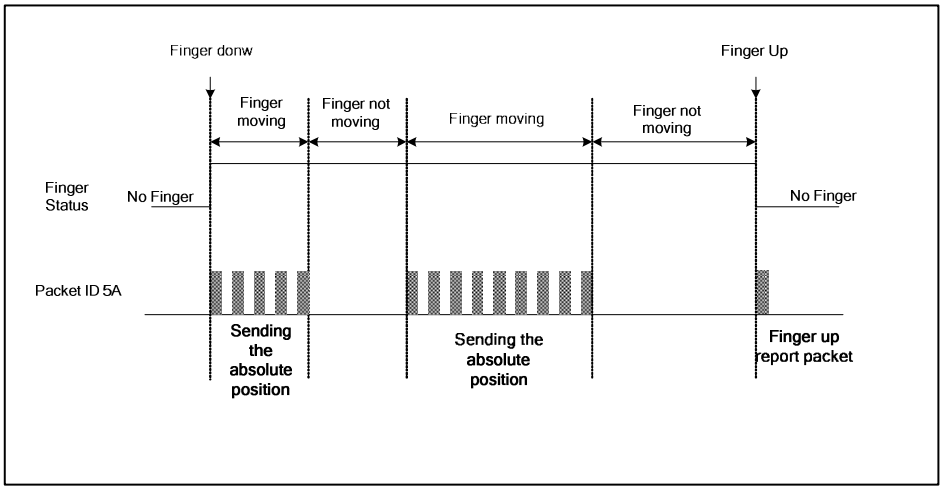

The distance between each finger should be at least one cell of sensor (Typical: 8 mm).

6-5.4) Firmware Version Packet

The host uses this packet to get the firmware version of the touchpad.

Firmware version					
Command Type	Packet Transmission Definition				Description
	Byte 1	Byte 2	Byte 3	Byte 4	
	Packet ID	Register Number Definition / Data	Data	Data / Reserve	
Read Command Packet	0x53	0x00	0x00	0x01	NA

After receiving the read Firmware Version Packet, the touchpad will respond to this packet by sending the packet ID of 0x52.

Firmware version					
Command Type	Packet Transmission Definition				Description
	Byte 1	Byte 2	Byte 3	Byte 4	
	Packet ID	Register Number Definition / Data	Data	Data / Reserve	
Response Command Packet	0x52	0x00	0x0**X**	0x**Y**1	Refer to # 1

Description	
# 1	Low nibble of Byte 3 + High nibble of Byte 4: Minor firmware version FW Version is defined as **0.1** **(XY = 01)** … FW Version is defined as **0.7** **(XY = 07)** FW Version is defined as **0.8** **(XY = 08)**

6-5.5) Power State Packet

The Host uses this Packet to get the **Power State** of the Touchpad.

Power State					
Command Type	Packet Transmission Definition				Description
	Byte 1	Byte 2	Byte 3	Byte 4	
	Packet ID	Register Number Definition / Data	Data	Data / Reserve	
Read Command Packet	0x53	0x50	0x00	0x01	NA

After receiving the Read **Power State** Packet, the Touchpad will respond to this Packet by sending Packet 0x52.

Power State					
Command Type	**Packet Transmission Definition**				**Description**
	Byte 1	**Byte 2**	**Byte 3**	**Byte 4**	
	Packet ID	**Register Number Definition / Data**	**Data**	**Data / Reserve**	
Response Command Packet	0x52	0x5**X**	0x0**Y**	0x01	Refer to # 1

The host uses the Write **Power State** Packet to change the **Power State** of the Touchpad.

Power State					
Command Type	**Packet Transmission Definition**				**Description**
	Byte 1	**Byte 2**	**Byte 3**	**Byte 4**	
	Packet ID	**Register Number Definition / Data**	**Data**	**Data / Reserve**	
Write Command Packet	0x54	0x5**X**	0x0**Y**	0x01	Refer to # 2

<table>
<tr><th></th><th>Description</th></tr>
<tr><td># 1</td><td>
X: Low nibble of Byte 2, defines as Power State.
Bit 3,2 = Power State
➔ 10 = Normal mode(Default)
➔ 01 = Idle mode
➔ 00 = Deep Sleep mode
Bit 1,0 = Reserve, 0
Y: Low nibble of Byte 3, defines as Report rate of Normal mode
In Normal mode:
Bit 3~0 = Report rate
<table>
<tr><td>Bit 3,2,10</td><td>Report rate</td></tr>
<tr><td>0xF</td><td>~80Hz</td></tr>
<tr><td>0xA</td><td>~100Hz(default)</td></tr>
<tr><td>0x7</td><td>~115Hz</td></tr>
<tr><td>0x5</td><td>~130Hz</td></tr>
<tr><td>0x3</td><td>~150Hz</td></tr>
</table>
In Idle and Deep Sleep mode:
Bit 3~0 = = Reserve, 0
</td></tr>
<tr><td># 2</td><td>
X: Low nibble of Byte 2, defines as Power State.
Bit 3,2 = Power State
➔ 10 = Normal mode(Default)
➔ 01 = Idle mode
➔ 00 = Deep Sleep mode
Bit 1,0 = Reserve, 0
Y: Low nibble of Byte 3, defines as Report rate of Normal mode
In Normal mode:
Bit 3~0 = Report rate
<table>
<tr><td>Bit 3,2,10</td><td>Report rate</td></tr>
<tr><td>0xF</td><td>~80Hz</td></tr>
<tr><td>0xA</td><td>~100Hz(default)</td></tr>
<tr><td>0x7</td><td>~115Hz</td></tr>
<tr><td>0x5</td><td>~130Hz</td></tr>
<tr><td>0x3</td><td>~150Hz</td></tr>
</table>
In Idle and Deep Sleep mode:
Bit 3~0 = = Reserve, 0
</td></tr>
</table>

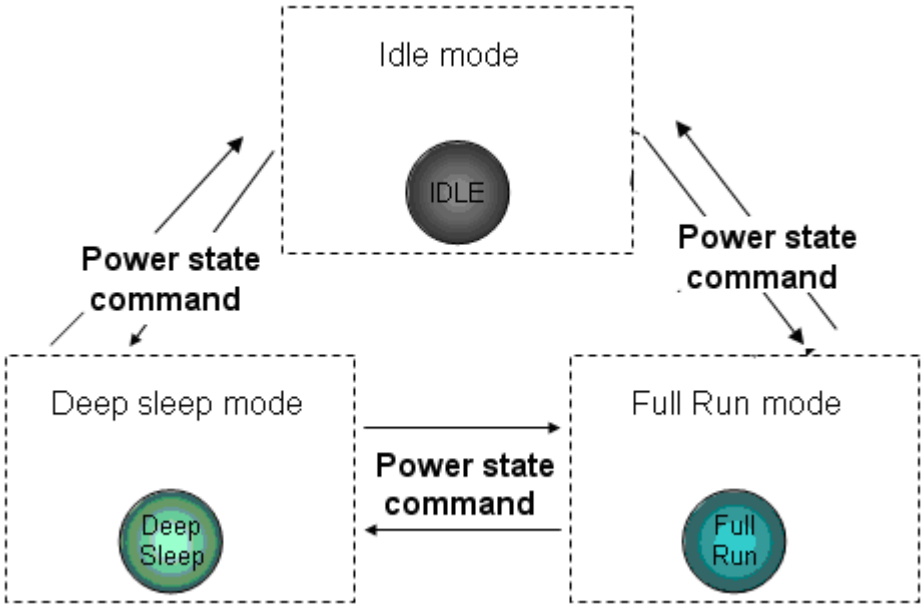

Note:

1. **Full Run mode**: when your finger touch at touchpad mean in “Full run mode”. You can issue “Power state command” to enter “Deep sleep mode”. or “Idle mode”
2. **Idle mode**: The “Idle mode” mean saving power mode. You can issue “Power state command” to enter “Deep sleep mode” or “Full run mode”
3. **Deep sleep mode**: This mode mean sleep mode. You can issue command from "Full Run mode or idle mode" to enter "sleep mode" or wake-up form “Deep sleep mode”.

6-5.6) Firmware ID (Project ID) Packet

The host uses this packet to get the Firmware ID of the touchpad.

Firmware ID					
Command Type	Packet Transmission Definition				Description
	Byte 1	Byte 2	Byte 3	Byte 4	
	Packet ID	Register Number Definition / Data	Data	Data / Reserve	
Read Command Packet	0x53	0xF0	0x00	0x01	NA

After receiving the read Firmware ID Packet, the Touchpad will respond to this packet by sending the packet ID of 0x52.

Firmware ID					
Command Type	Packet Transmission Definition				Description
	Byte 1	Byte 2	Byte 3	Byte 4	
	Packet ID	Register Number Definition / Data	Data	Data / Reserve	
Response Command Packet	0x52	0xF**8**	0x**2F**	0x**8**1	Refer to # 1

6-6) Integration Design Guide

Avoid the design that Front-case overlap and press on the active area of the touch-panel.
Give enough gap (over 0.5mm at compressed) between the front case and touch-panel to protect wrong operating.

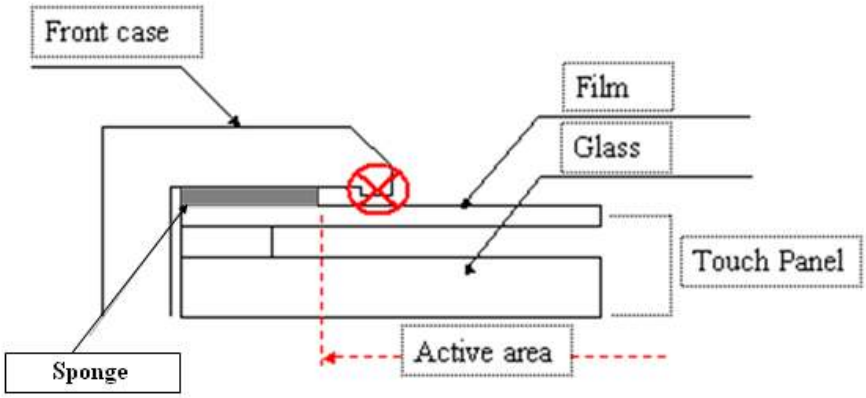

Use a buffer material (Gasket) between the touch-panel and front-case to protect damage and wrong operating.Avoid the design that buffer material overlap and press on the inside of touch-panel viewing area.

Note6-1: We strongly suggest to follow above design guide to avoid the linear defect happened on the touch panel.

7.Electrical Characteristics

7-1) Absolute maximum rating

Parameter	Symbol	Rating	Unit
Logic Supply Voltage	VDD	-0.3 to +7	V
Positive Supply Voltage	V_{POS}	-0.3 to +18	V
Negative Supply Voltage	V_{NEG}	+0.3 to -18	V
Max .Drive Voltage Range	V_{POS} - V_{NEG}	36	V
Supply Voltage	VGG	-0.3 to +45	V
Supply Voltage	VEE	-25.0 to +0.3	V
Supply Range	VGG-VEE	-0.3 to +45	V
Operating Temp. Range	TOTR	0 to +50	℃
Storage Temperature	TSTG	-25 to +70	℃

7-2) Panel DC characteristics

Parameter	Symbol	Conditions	Min	Typ	Max	Unit
Signal ground	V_{SS}		-	0	-	V
Logic Voltage supply	V_{DD}		3.0	3.3	3.6	V
	I_{VDD}	V_{DD}=3.3V	-	0.7	3.0	mA
Gate Negative supply	V_{EE}		-21	-20	-19	V
	I_{EE}	V_{EE} =-20V	-	0.6	1.2	mA
Gate Positive supply	V_{GG}		21	22	23	V
	I_{GG}	V_{GG} = 22V	-	0.7	1.2	mA
Source Negative supply	V_{NEG}		-15.4	-15	-14.6	V
	I_{NEG}	V_{NEG} = -15V	-	6.5	43	mA
Source Positive supply	V_{POS}		14.6	15	15.4	V
	I_{POS}	V_{POS} = 15V	-	6.5	43	mA
Border supply	V_{Border}	V_{POS} = 15V	14.6	15	15.4	V
		V_{NEG} = -15V	-15.4	-15	-14.6	V
Asymmetry source	V_{Asym}	V_{POS}+V_{NEG}	-800	0	800	mV
Common voltage	V_{COM}		-2.5	Adjusted	-0.3	V
	I_{COM}		-	0.20	-	mA
Panel Power	P		-	230	1350	mW
Standby power panel	P_{STBY}		-	-	0.4	mW
Operating temperature			0	-	50	℃
Storage temperature			-25	-	70	℃

- The maximum power consumption is measured by ISIS system at 85Hz operation waveform with following pattern transition: from pattern of repeated 1 consecutive black scan lines followed by 1 consecutive white scan line to that of repeated 1 consecutive white scan lines followed by 1 consecutive black scan lines.(Note 7-1)
- The Typical power consumption is measured by ISIS system at 85Hz waveform with following pattern transition: from horizontal 4 gray scale pattern to vertical 4 gray scale pattern. (Note 7-2)
- The standby power is the consumed power when the panel controller is in standby mode.
- The listed electrical/optical characteristics are only guaranteed under the controller & waveform provided by E Ink.
- Vcom is recommended to be set in the range of assigned value ± 0.1V
- The maximum I_{COM} inrush current is about 800 mA

Note 7-1

The maximum power consumption

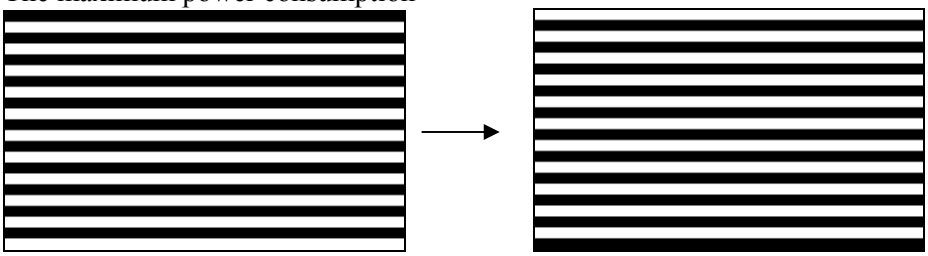

Note 7-2

The Typical power consumption

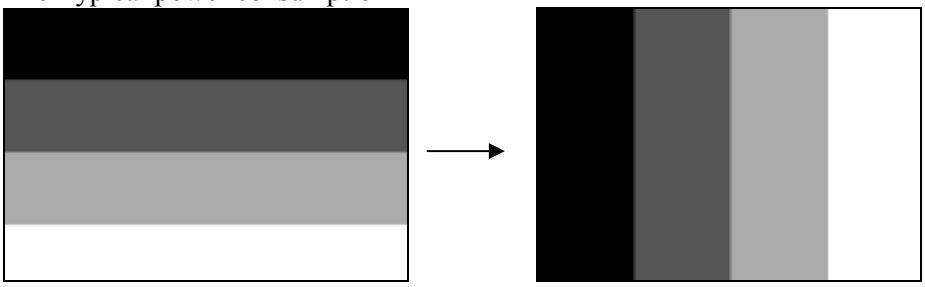

7-3) Panel AC characteristics

VDD=3.0V to 3.6V, unless otherwise specified.

Parameter	Symbol	Min.	Typ.	Max.	Unit	App Pin
Clock frequency	fckv	-	-	200	kHz	CKV
Minimum "L" clock pulse width	twL	0.5	-	-	us	
Clock rise time	trckv	-	-	100	ns	
Clock fall time	tfckv	-	-	100	ns	
Data setup time	tSU	100	-	-	ns	CKV, SPV
Data hold time	tH	100	-	-	ns	
Pulse rise time	trspv	-	-	100	ns	SPV
Pulse fall time	tfspv	-	-	100	ns	
Clock XCL cycle time	tcy	50	-	DC	ns	Below table
D0 .. D7 setup time	tsu	8	-	-	ns	
D0 .. D7 hold time	th	1	-	-	ns	
XLE on delay time	tLEdly	40	-	-	ns	
XLE high-level pulse width	tLEw	40	-	-	ns	
XLE off delay time	tLEoff	200	-	-	ns	
Output setting time to +/- 30mV(C_{load}=200pF)	tout	-	-	12	us	

CLOCK & DATA TIMING

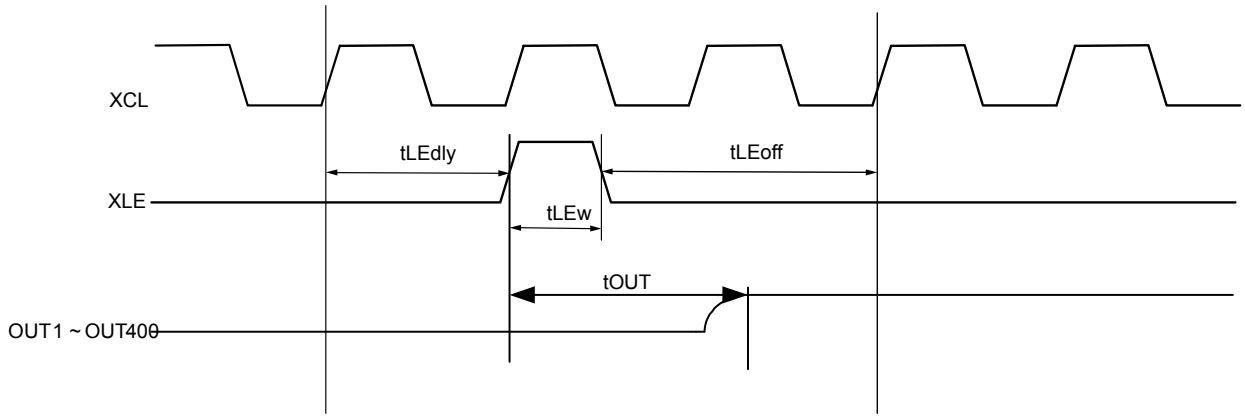

OUTPUT LATCH CONTROL SIGNALS

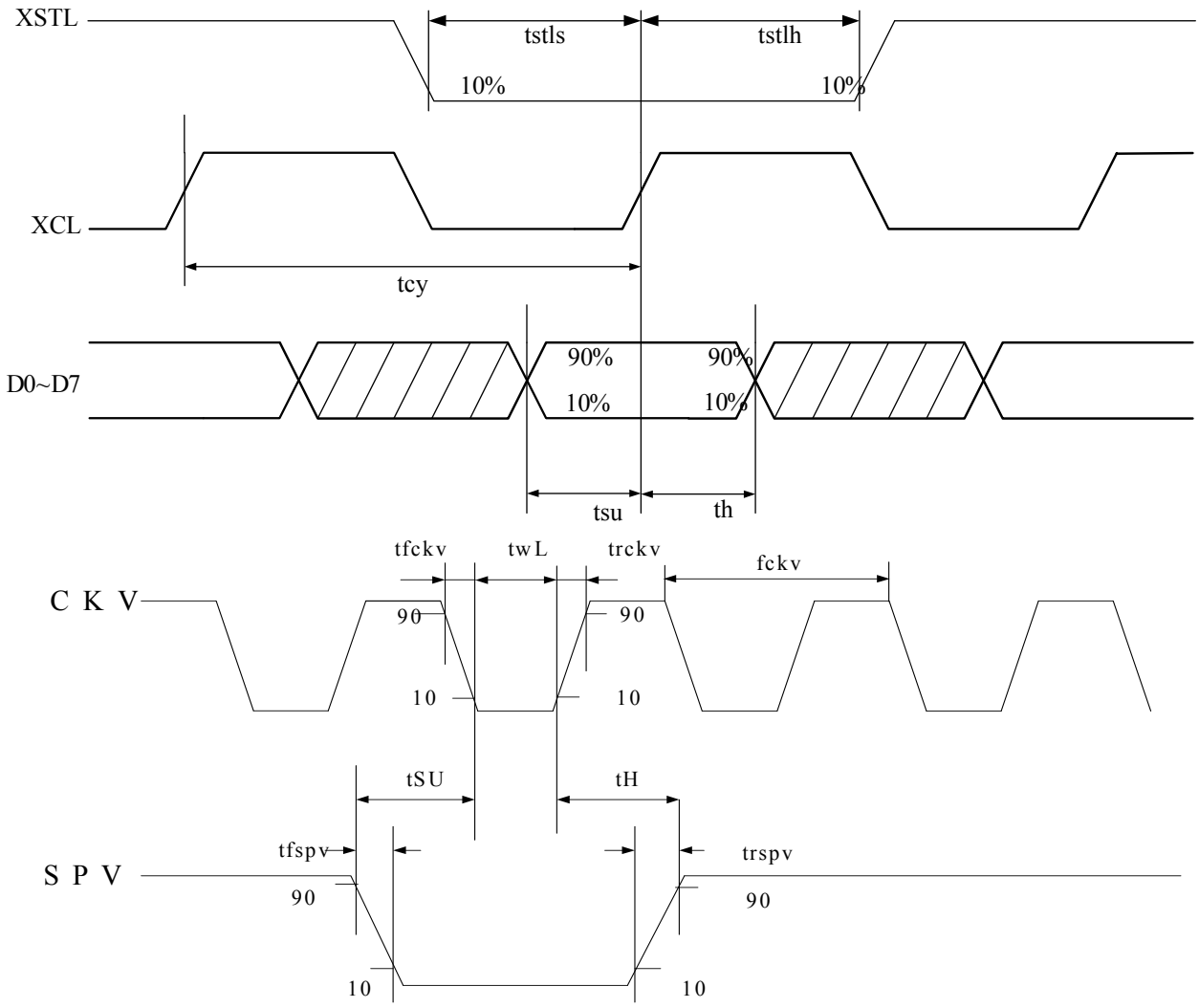

8.Power on Sequence

Power Rails must be sequenced in the following order：

1. VSS → VDD → VNEG → VPOS (Source driver) → VCOM

2. VSS → VDD → VEE → VGG (Gate driver)

POWER ON

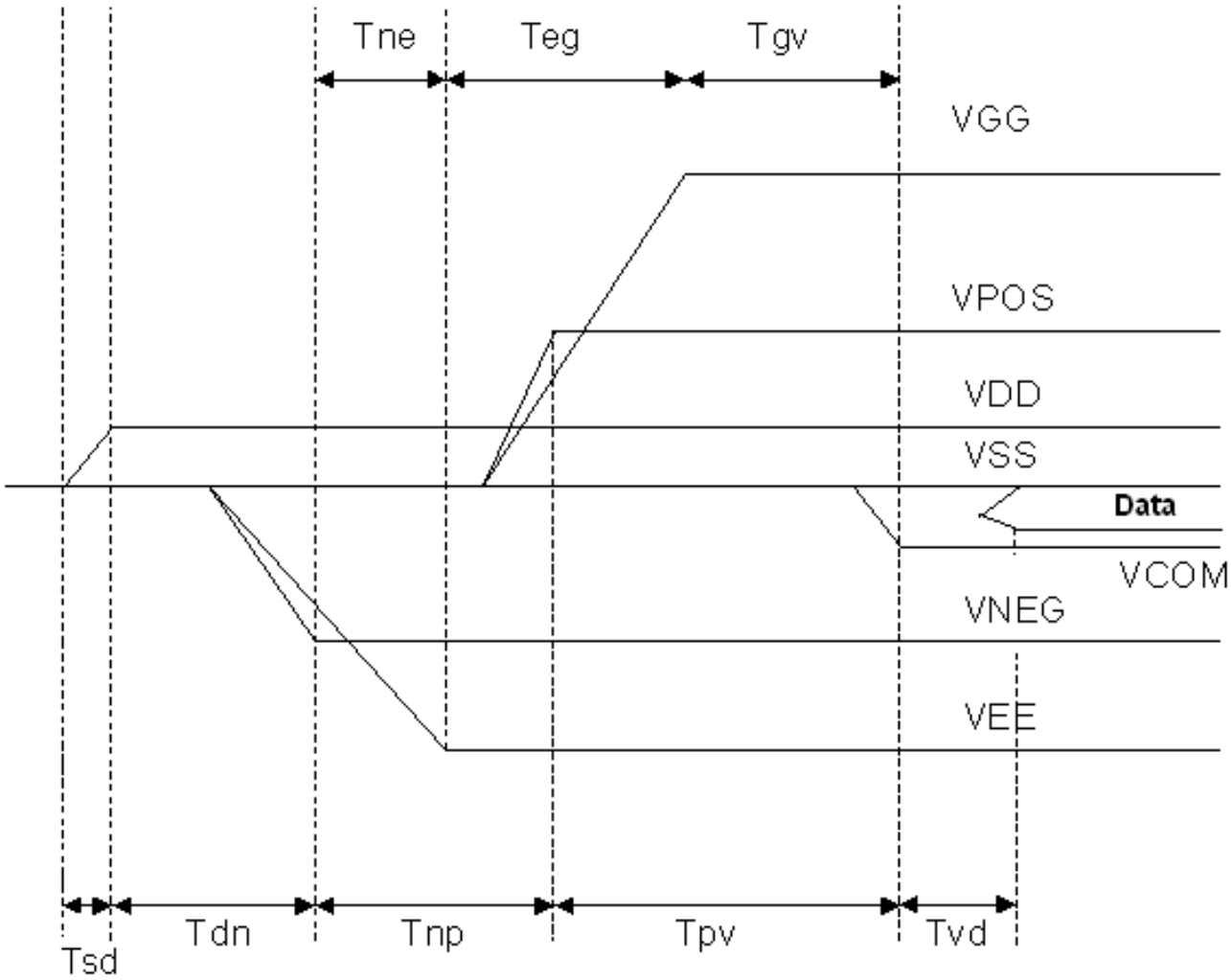

	Min	Max
Tsd	100us	-
Tdn	100us	-
Tnp	1000us	-
Tpv	100us	-
Tvd	100us	-
Tne	0us	-
Teg	1000us	-
Tgv	100us	-

POWER DOWN

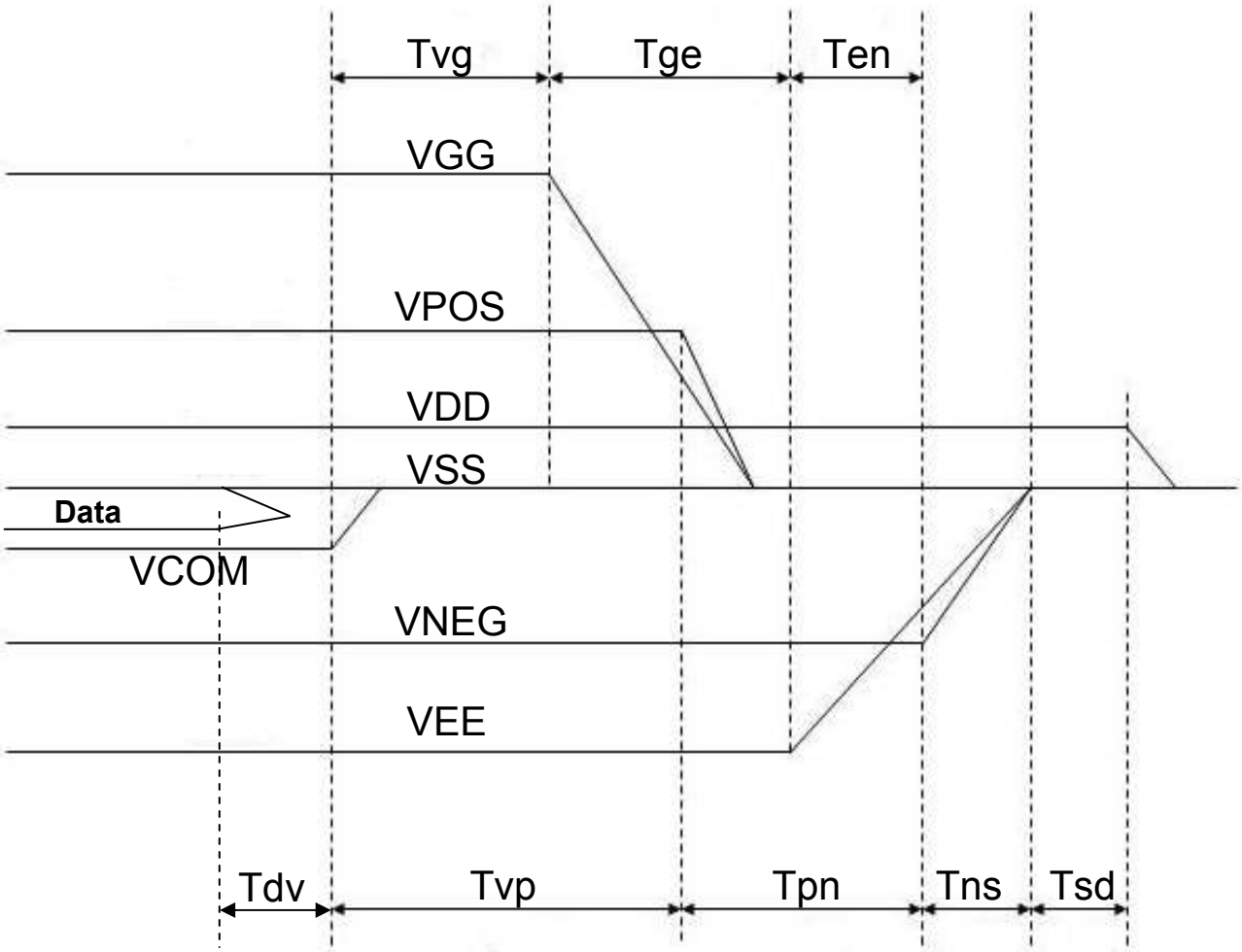

	Min	Max
Tdv	100 μs	-
Tvp	0 μs	-
Tpn	0 μs	-
Tns	-	1000ms
Tsd	100 μs	-
Tvg	0 μs	-
Tge	0 μs	-
Ten	0 μs	-

Discharge time Sequence

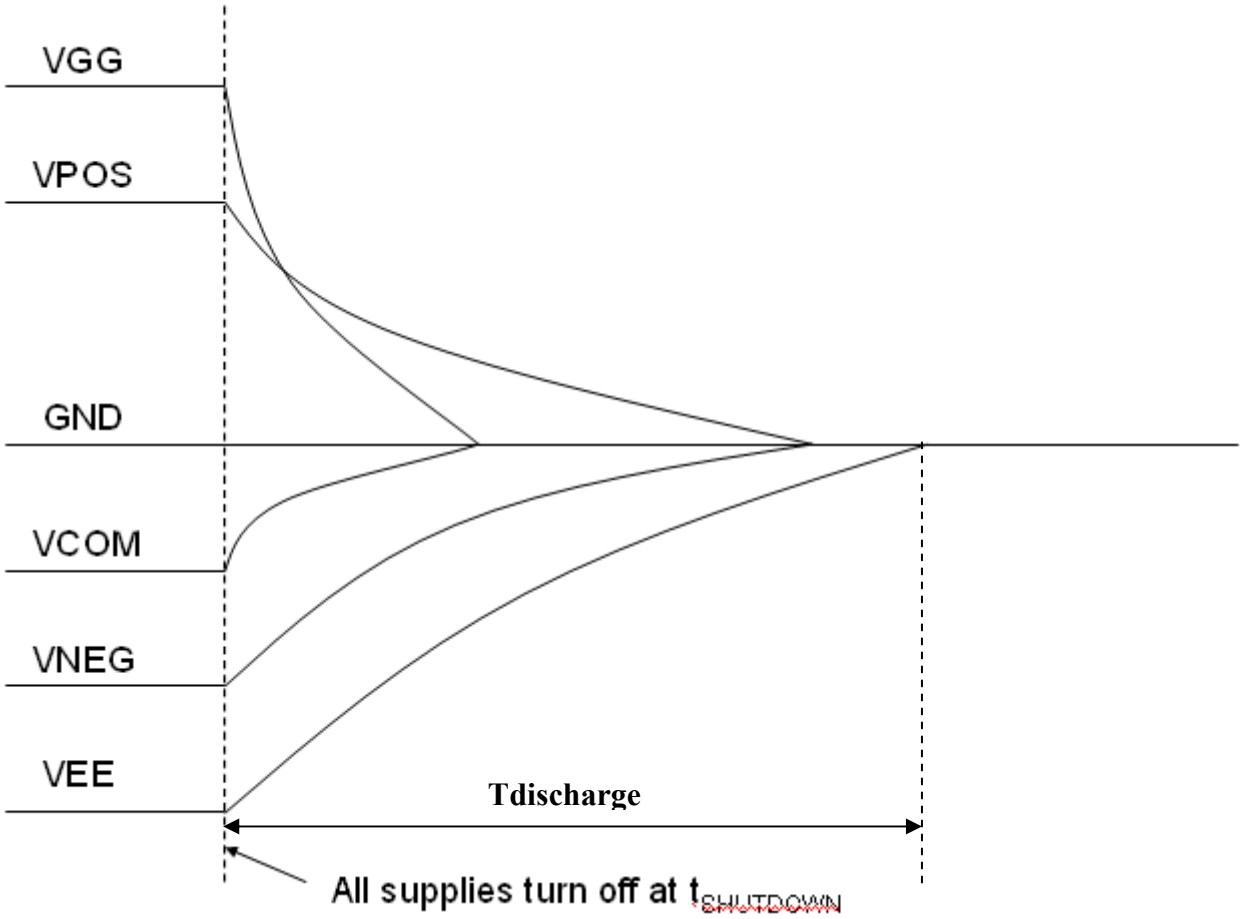

Note8-1：Supply voltages decay through pulldown resistors.
Note8-2：VEE must remain negative of all other supplies during decay period.

8-1) Refresh Rate

The module ED060SCM is applied at a maximum screen refresh rate of 85Hz.

	Min	Max
Refresh Rate	-	85Hz

9. Optical characteristics

9-1) Specifications

Measurements are made with diffuse illumination.

T = 25°C

SYMBOL	PARAMETER	CONDITIONS	MIN	TYP.	MAX	UNIT	Note
R	Reflectance	White	30	35	-	%	Note 9-1
Gn	N_{th} Grey Level	-	-	DS+(WS-DS)×n/(m-1)	-	L*	-
CR	Contrast Ratio	-	9	11	-		-

WS: White state , DS: Dark state, Gray state from Dark to White :DS、G1、G2…、Gn…、Gm-2、WS

m:4、8、16 when 2、3、4 bits mode

Note 9-1: Luminance meter: MIINOLTA Spectrophotometer CM-2600d

9-2) Definition of contrast ratio

The contrast ratio (CR) is the ratio between the reflectance in a full white area (Rl) and the reflectance in a dark area (Rd):

CR = Rl /Rd

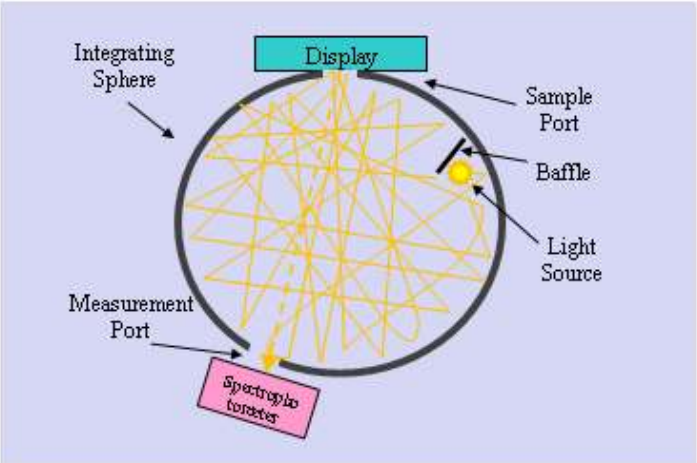

9-3) Reflection Ratio

The reflection ratio is expressed as:

$R = \text{Reflectance Factor}_{\text{white board}} \times (L_{\text{center}} / L_{\text{white board}})$

L_{center} is the luminance measured at center in a white area (R=G=B=1). $L_{\text{white board}}$ is the luminance of a standard white board. Both are measured with equivalent illumination source. The viewing angle shall be no more than 2 degrees.

10.HANDLING, SAFETY AND ENVIROMENTAL REQUIREMENTS

WARNING
The display glass may break when it is dropped or bumped on a hard surface. Handle with care. Should the display break, do not touch the electrophoretic material. In case of contact with electrophoretic material, wash with water and soap.

CAUTION
The display module should not be exposed to harmful gases, such as acid and alkali gases, which corrode electronics components.
Disassembling the display module can cause permanent damage and invalidates the warranty agreements.

Observe general precautions that are common to handling delicate electronic components. The glass can break and front surfaces can easily be damaged. Moreover the display is sensitive to static electricity and other rough environmental conditions.

Data sheet status	
Product specification	This data sheet contains final product specifications.
Limiting values	
Limiting values given are in accordance with the Absolute Maximum Rating System (IEC 134). Stress above one or more of the limiting values may cause permanent damage to the device. These are stress ratings only and operation of the device at these or at any other conditions above those given in the Characteristics sections of the specification is not implied. Exposure to limiting values for extended periods may affect device reliability.	
Application information	
Where application information is given, it is advisory and does not form part of the specification.	

11. Reliability test

	TEST	CONDITION	METHOD
1	High-Temperature Operation	T = +50°C, RH = 30% for 240 hrs	IEC 60 068-2-2Bp
2	Low-Temperature Operation	T = 0°C for 240 hrs	IEC 60 068-2-2Ab
3	High-Temperature Storage	T = +70°C, RH=23% for 240 hrs (Test In White Pattern)	IEC 60 068-2-2Bp
4	Low-Temperature Storage	T = -25°C for 240 hrs (Test In White Pattern)	IEC 60 068-2-1Ab
5	High-Temperature, High-Humidity Operation	T = +40°C, RH = 90% for 168 hrs	IEC 60 068-2-3CA
6	High Temperature, High- Humidity Storage	T = +60℃, RH=80% for 240hrs (Test In White Pattern)	IEC 60 068-2-3CA
7	Temperature Cycle	-25℃ → +70℃, 100 Cycles 30mins 30 mins (Test In White Pattern)	IEC 60 068-2-14
8	Solar radiation test	765 W/m^2 for 168hrs,40℃ (Test In White Pattern)	IEC60 068-2-5Sa
9	Package Vibration	1.04G, Frequency: 10~500Hz Direction: X,Y,Z Duration: 1 hours in each direction	Full packed for shipment
10	Package Drop Impact	Drop from height of 122 cm on concrete surface. Drop sequence: 1 corner, 3 edges, 6 faces One drop for each.	Full packed for shipment
11	Electrostatic Effect (non-operating)	(Machine model)+/- 250V 0Ω, 200pF	IEC 62179, IEC 62180
12	Altitude test Operation	700hPa (= 3000m) 48Hr	
13	Altitude test Storage	260hPa (= 10000m) 48Hr (Test In White Pattern)	

Actual EMC level to be measured on customer application
Note: The protective film must be removed before temperature test.

< Criteria >
Main display module should no defect of function, screen quality and appearance (including : Line,no image)

12.Bar Code definition

E01	00	4	01	1	I	7	4	00361	A	T
1	2	3	4	2	5	6	2	7	2	8

1 : EPD model code:

ED060SCM: E58;E5A

2 : Internal control codes:

3 : FPL reversion code

V220C:6 V220E:8

4 : FPL batch code:

01~99	001~099	**G0~G9**	160~169	**Q0~Q9**	230~239	**X0~X9**	300~309
A0~A9	100~109	**H0~H9**	170~179	**R0~R9**	240~249	**Y0~Y9**	310~319
B0~B9	110~119	**J0~J9**	180~189	**S0~S9**	250~259	**Z0~Z9**	320~329
C0~C9	120~129	**K0~K9**	190~199	**T0~T9**	260~269		
D0~D9	130~139	**L0~L9**	200~209	**U0~U9**	270~279		
E0~E9	140~149	**M0~M9**	210~219	**V0~V9**	280~289		
F0~F9	150~159	**N0~N9**	220~229	**W0~W9**	290~299		

5 : Year:

F:2005 / G:2006 / H:2007 / I:2008 /... / Z:2025

6 : Month:

1:Jan. 2:Feb. ... 9:Sep. A:Oct. B:Nov. C:Dec.

7 : Serial number

8 : MFG code:

TOC Feb1: K ; TOC Feb2: Y ; TOC Feb3: T ; EIH :P;

MOS:S ; Microview:V ;TYT FAB 5:G ;TYT FAB 4:H

13.Block Diagran

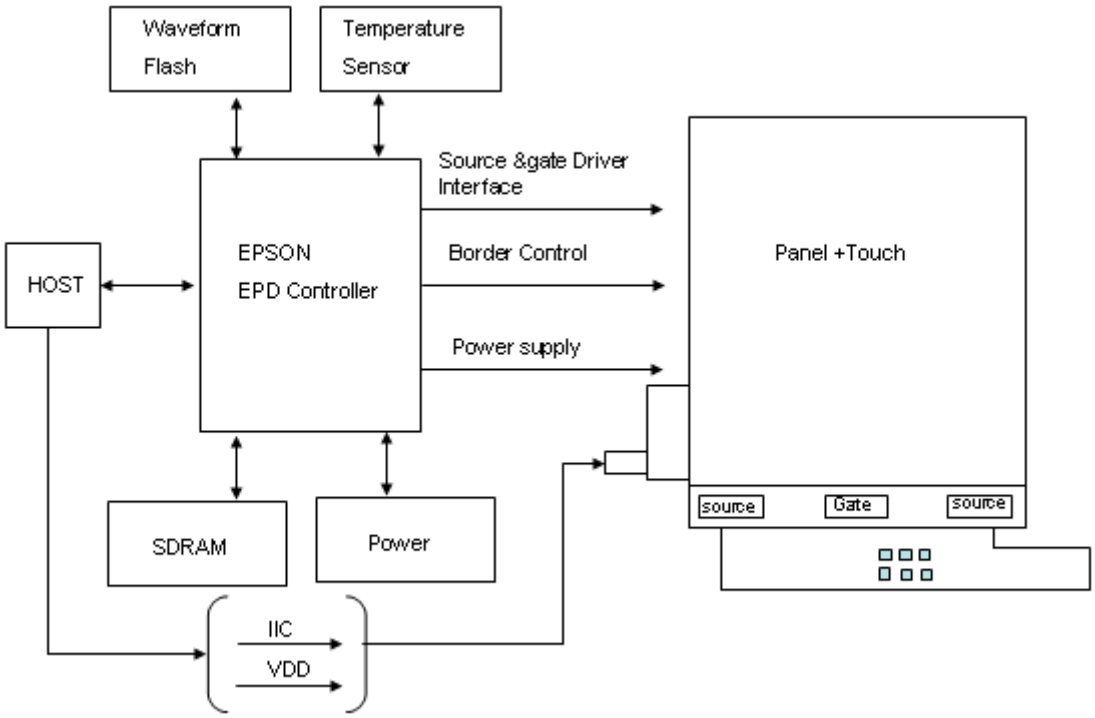

14.Packing

REV	DESCRIPTION	DESIGN	DATE
00	INITIAL RELEASE	Michael	'11.03.14

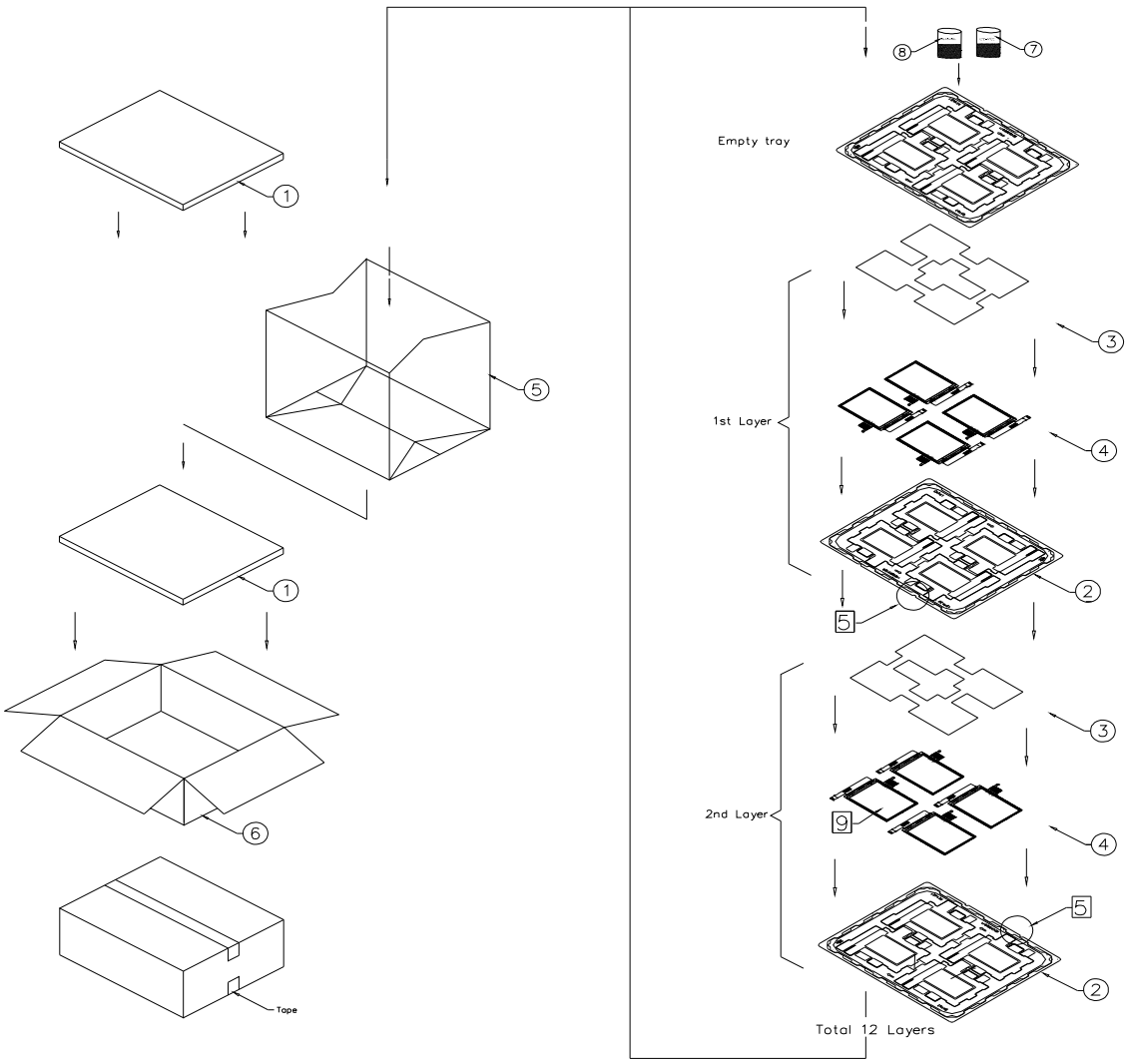

NOTE:

1. One layer include: 1 piece of cushion sheet, 4 pcs module & 1 piece of tray.
2. Q'TY: 48 pcs panel/carton.
3. Dimension: 455*375*190mm
4. Weight: 5.7 KG
5. Make sure tray stacked with 180° rotation. We can check this by lateral side view.

ITEM	DESCRIPTION	QTY	REMARK
9	EASY TAPE	48	For Remove Protect Sheet
8	30g加厚複合紙&碳乾燥劑73*95mm	2	
7	防鏽劑(保護容積25L)	3	
6	CARTON INTERNAL	1	
5	摺口袋450*380*700mm	1	抗靜電
4	ED060SCM	48	
3	EPE CUSHION SHEET	12	抗靜電
2	TRAY	13	抗靜電
1	EPE FOAM	2	

MTL.SPEC.	UNSPECIFIED TOL'S ±5.0mm ANGLE ROUGHNESS	REMARK	元太科技股份有限公司 E Ink Holdings Inc.		
APPROVE Patrick Lin '11.03.14	SCALE 1:1	UNIT mm	SHEET 1 OF 1	DWG.TITLE ED060SCM PACKING Dim	
CHECK Patrick Lin '11.03.14	MTL.NO.		DWG.NO.	REV. 01	A4 SIZE
DESIGN Michael Pan '11.03.14					