L3D07X-8x LCD module

- **Basic specifications**

Photo		
Technology		D7
Screen size	Diagonal	1.89cm (0.74”)
	H x V (mm)	16.00x10.00
Pixel number	H x V	1280x 800(WXGA)
Pixel pitch	H x V (μm)	12.5x 12.5
Outside Dimension	H x V x D (mm)	23.2 x 24.6x 5.8
Aspect Ratio		16:10
Display Colors		Monochrome
Micro Lens Array		With / Without Micro Lens Array
Liquid Crystal		TN mode

- ***Dimensional Outline Drawing***

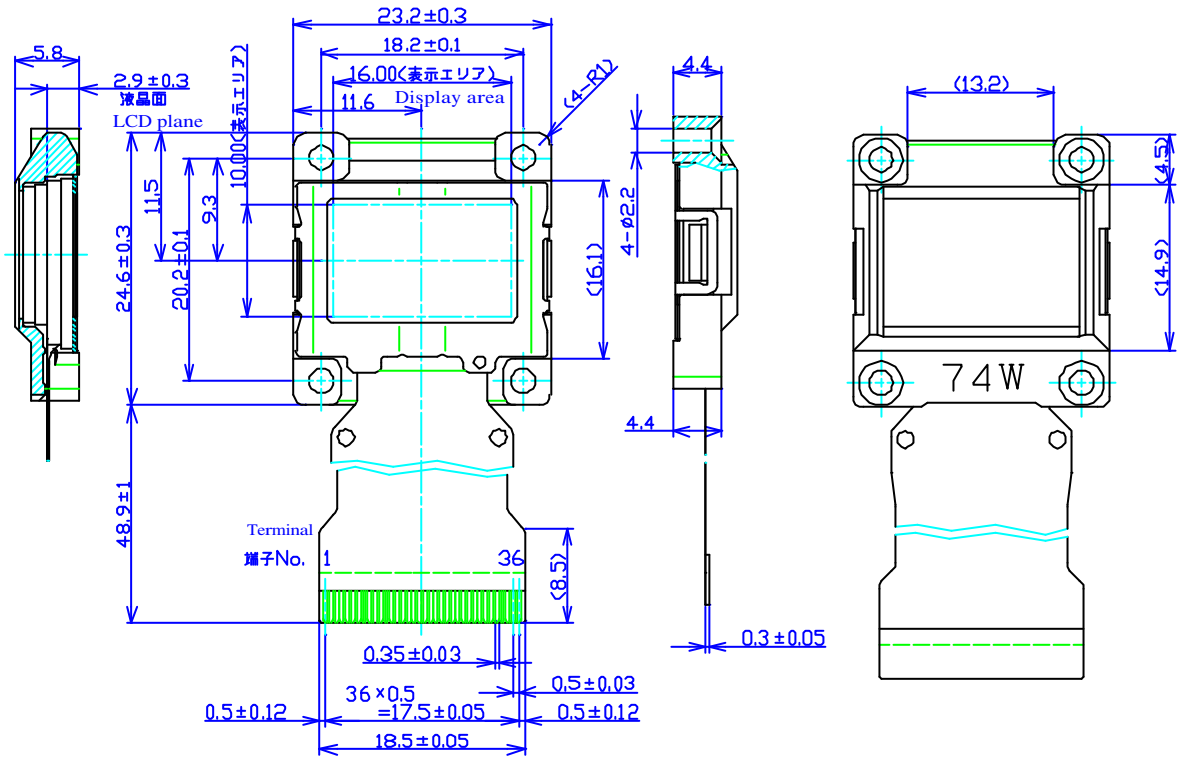

No part of this material may be reproduced or duplicated in any from or any means without the written permission of EPSON. EPSON reserves the right to make changes to this material without notice.

©SEIKO EPSON CORPORATION 2008, All rights reserved.