TO :

Date : Jul.,03 , 2009

HannStar Product Specification

(Tentative)

Model: **HSD101PFW3 -A****

Note: 1. The information contained herein is tentative and may be changed without prior notices

2. Please contact HannStar Display Corp. before designing your product based on this module specification.

3. The information contained herein is presented merely to indicate the characteristics and performance of our products. No responsibility is assumed by HannStar for any intellectual property claims or other problems that may result from application based on the module described herein.

4. The mark "**" of Model means sub-model code.

The information contained in this document is the exclusive property of HannStar Display Corporation. It shall not be disclosed, distributed or reproduced in whole or in part without written permission of HannStar Display Corporation.

Record of Revisions

Rev.	Date	Sub-Model	Description of change
1.0	Jul., 03, 2009	A**	Tentative specification was first released

The information contained in this document is the exclusive property of HannStar Display Corporation. It shall not be disclosed, distributed or reproduced in whole or in part without written permission of HannStar Display Corporation.

Contents

1.0 General description p.4

2.0 Absolute maximum ratings..... p.5

3.0 Optical characteristics..... p.6

4.0 Block diagram p.10

5.0 Interface pin connection p.12

6.0 Electrical characteristics p.15

7.0 Reliability test items p.22

8.0 Outline dimension p.23

9.0 Lot mark p.25

10.0 Package specification p.26

11.0 General precaution p.27

The information contained in this document is the exclusive property of HannStar Display Corporation. It shall not be disclosed, distributed or reproduced in whole or in part without written permission of HannStar Display Corporation.

1.0 GENERAL DESCRIPTION

1.1 Introduction

HannStar Display model HSD101PFW3-A is a color active matrix thin film transistor (TFT) liquid crystal display (LCD) that uses amorphous silicon TFT as a switching device. This model is composed of a TFT LCD panel, a driving circuit and a back light system. This TFT LCD has a 10.1 (16:9) inch diagonally measured active display area with WSVGA (1024 horizontal by 600 vertical pixel) resolution.

1.2 Features

- 10.1 (16:9 diagonal) inch configuration
- One channel LVDS interface
- 262K color by 6 bit R.G.B signal input
- RoHS Compliance
- Halogen Free

1.3 Applications

- Mobile NB
- Digital Photo frame
- Display terminal for AV application

1.4 General information

Item	Specification	Unit
Outline Dimension	243x 146.5 (typ) w/ Bracket & PCB	mm
Display area	222.72(H) x 125.28(V)	mm
Number of Pixel	1024 RGB (H) x 600(V)	pixels
Pixel pitch	0.2175(H) x 0.2088(V)	mm
Pixel arrangement	RGB Vertical stripe	
Display mode	Normally white	
NTSC	50	%
Surface treatment	Glare, Hard-Coating (3H)	
Weight	160 (Max.)	g
Back-light	White LED	
Power Consumption	0.65 (Max)/Logic	W

The information contained in this document is the exclusive property of HannStar Display Corporation. It shall not be disclosed, distributed or reproduced in whole or in part without written permission of HannStar Display Corporation.

1.5 Mechanical Information

Item		Min.	Typ.	Max.	Unit	Remark
Module Size	Horizontal (H)	242.5	243	243.5	mm	W/ bracket &PCB
	Vertical (V)	146	146.5	147	mm	
	Depth (D)	—	3.3	3.6	mm	
Weight		—	152	160	g	

2.0 ABSOLUTE MAXIMUM RATINGS

2.1 Electrical Absolute Rating

2.1.1 TFT LCD Module

Item	Symbol	Min.	Max.	Unit	Note
LED Power Supply voltage	V_{LED}	-0.3	6.0	V	GND=0
Logic Supply voltage	V_{DD}	-0.3	6.0	V	

2.2 Environment Absolute Rating

Item	Symbol	Min.	Max.	Unit	Note
Operating Temperature	T_{opa}	0	50	℃	
Storage Temperature	T_{stg}	-20	60	℃	

The information contained in this document is the exclusive property of HannStar Display Corporation. It shall not be disclosed, distributed or reproduced in whole or in part without written permission of HannStar Display Corporation.

3.0 OPTICAL CHARACTERISTICS

3.1 Optical specification

Item		Symbol	Condition	Min.	Typ.	Max.	Unit	Note
Contrast		CR	Θ=0 Normal viewing angle	400	500	—		(1)(2)(4)
Response time		Tr		—	4	8	msec	(1)(3)
		Tf		—	12	24		
White luminance (5 point)		Y_L		160	180	—	cd/m^2	(1)(4)(5)
Color chromaticity (CIE1931)	Red	R_x		0.555	0.605	0.655		
		R_Y		0.302	0.352	0.402		
	Green	G_x		0.259	0.309	0.359		
		G_Y		0.487	0.537	0.587		
	Blue	B_x		0.099	0.149	0.199		
		B_Y		0.061	0.111	0.161		
	White	W_x		0.263	0.313	0.363		
		W_y		0.279	0.329	0.379		
Viewing angle	Hor.	Θ_L	CR>10	40	45	—		(1)(4)
		Θ_R		40	45	—		
	Ver.	Θ_U		10	15	—		
		Θ_D		30	35	—		
Brightness uniformity		B_{UNI}	Θ=0 (5point)	80	—	—	%	(5)
Brightness Uniformity		B_{UNI}	Θ=0 (13 points)	70	—	—	%	(6)

3.2 Measuring Condition

- Measuring surrounding：dark room
- Ambient temperature：25±2°C
- 15min. warm-up time.

The information contained in this document is the exclusive property of HannStar Display Corporation. It shall not be disclosed, distributed or reproduced in whole or in part without written permission of HannStar Display Corporation.

3.3 Measuring Equipment

- FPM520 of Westar Display technologies, INC., which utilized SR-3 for Chromaticity and BM-5A for other optical characteristics.
- Measuring spot size：20 ~ 21 mm

Note (1) Definition of Viewing Angle:

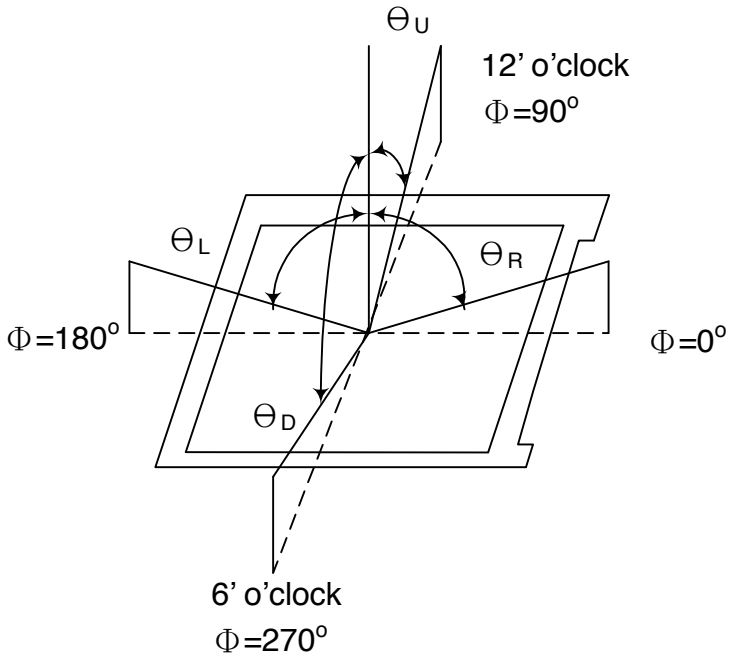

Note (2) Definition of Contrast Ratio (CR) :
measured at the center point of panel

$$CR = \frac{\text{Luminance with all pixels white}}{\text{Luminance with all pixels black}}$$

The information contained in this document is the exclusive property of HannStar Display Corporation. It shall not be disclosed, distributed or reproduced in whole or in part without written permission of HannStar Display Corporation.

Note (3) Definition of Response Time : Sum of T_R and T_F

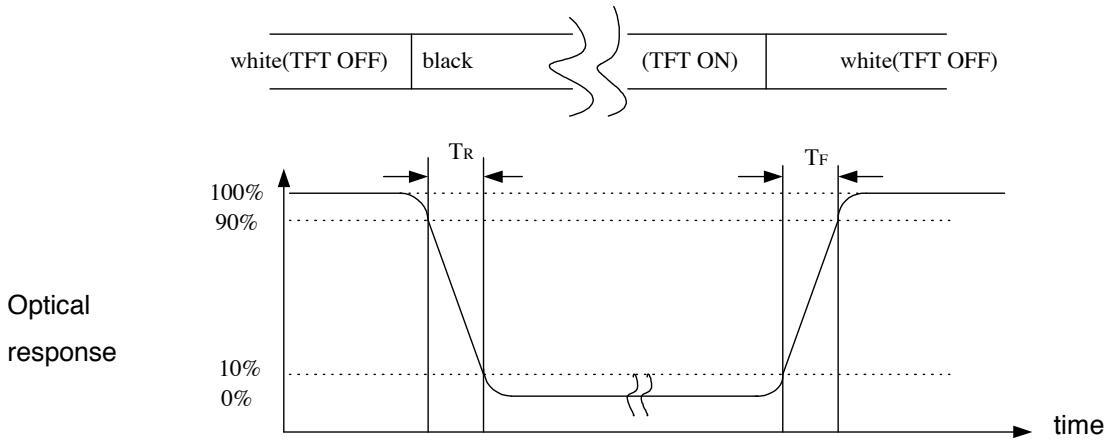

Note (4) Definition of optical measurement setup

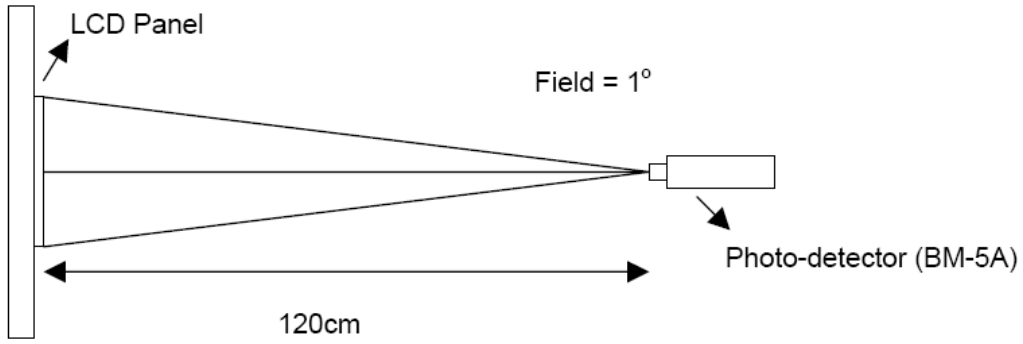

The information contained in this document is the exclusive property of HannStar Display Corporation. It shall not be disclosed, distributed or reproduced in whole or in part without written permission of HannStar Display Corporation.

Note (5) Definition of Average Luminance Uniformity of White (5 Point)

$$\text{Average Luminance Uniformity} = \frac{Y_1+Y_2+Y_3+Y_4+Y_5}{5}$$

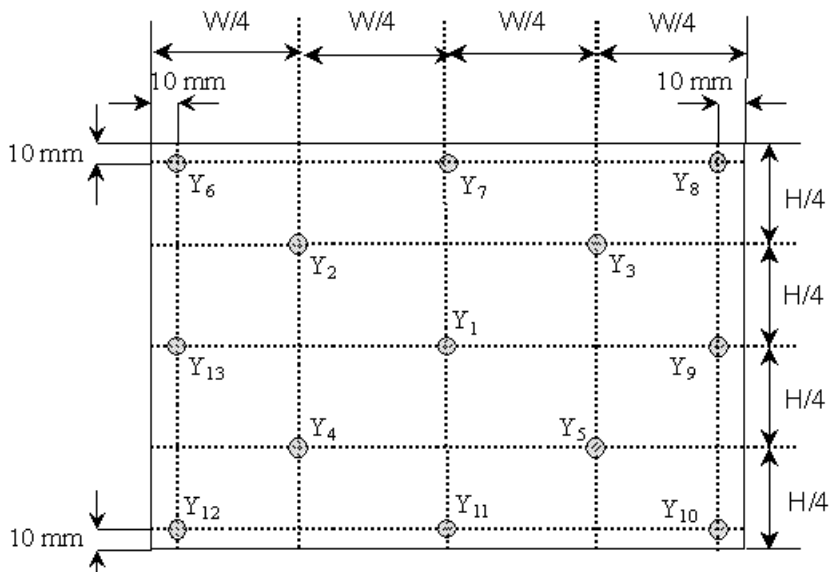

Note (6) Definition of brightness uniformity

$$\text{Luminance uniformity} = \frac{\text{(Min Luminance of 5 points)}}{\text{(Max Luminance of 5 points)}} \times 100\%$$

$$\text{Luminance uniformity} = \frac{\text{(Min Luminance of 13 points)}}{\text{(Max Luminance of 13 points)}} \times 100\%$$

The information contained in this document is the exclusive property of HannStar Display Corporation. It shall not be disclosed, distributed or reproduced in whole or in part without written permission of HannStar Display Corporation.

4.0 BLOCK DIAGRAM

4.1 TFT LCD Module:

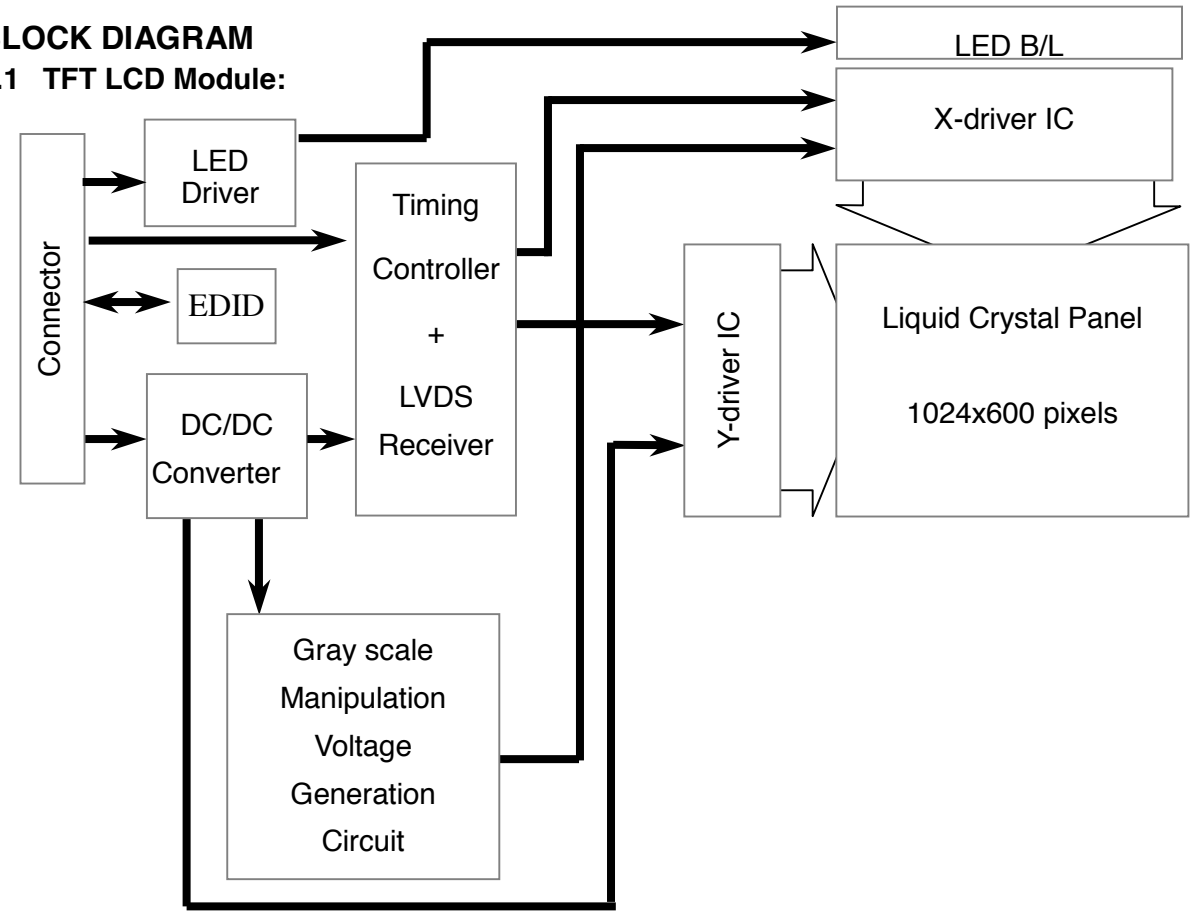

4.2 Pixel Format

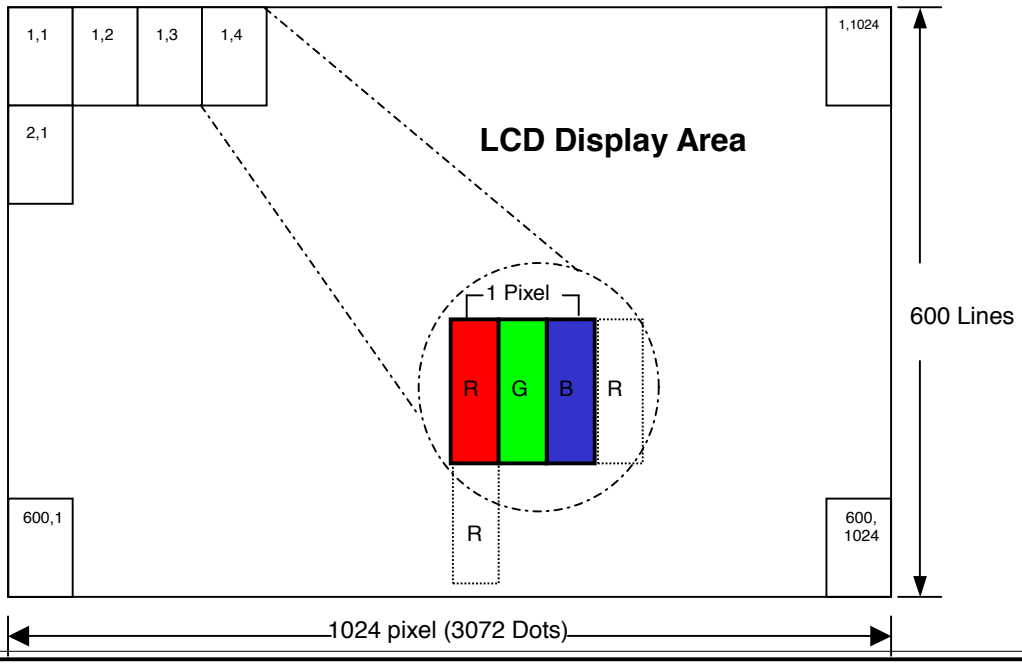

The information contained in this document is the exclusive property of HannStar Display Corporation. It shall not be disclosed, distributed or reproduced in whole or in part without written permission of HannStar Display Corporation.

4.3 Relationship Between Displayed Color and Input

	Display	MSB R5	R4	R3	R2	R1	LSB R0	MSB G5	G4	G3	G2	G1	LSB G0	MSB B5	B4	B3	B2	B1	LSB B0	Gray scale level
Basic color	Black	L	L	L	L	L	L	L	L	L	L	L	L	L	L	L	L	L	L	-
	Blue	L	L	L	L	L	L	L	L	L	L	L	L	H	H	H	H	H	H	-
	Green	L	L	L	L	L	L	H	H	H	H	H	H	L	L	L	L	L	L	-
	Light Blue	L	L	L	L	L	L	H	H	H	H	H	H	H	H	H	H	H	H	-
	Red	H	H	H	H	H	H	L	L	L	L	L	L	L	L	L	L	L	L	-
	Purple	H	H	H	H	H	H	L	L	L	L	L	L	H	H	H	H	H	H	-
	Yellow	H	H	H	H	H	H	H	H	H	H	H	H	L	L	L	L	L	L	-
	White	H	H	H	H	H	H	H	H	H	H	H	H	H	H	H	H	H	H	-
Gray scale of Red	Black	L	L	L	L	L	L	L	L	L	L	L	L	L	L	L	L	L	L	L0
	Dark ↑ ↓ Light	L	L	L	L	L	H	L	L	L	L	L	L	L	L	L	L	L	L	L1
		L	L	L	L	H	L	L	L	L	L	L	L	L	L	L	L	L	L	L2
		:						:						:						L3…L60
		H	H	H	H	L	H	L	L	L	L	L	L	L	L	L	L	L	L	L61
		H	H	H	H	H	L	L	L	L	L	L	L	L	L	L	L	L	L	L62
	Red	H	H	H	H	H	H	L	L	L	L	L	L	L	L	L	L	L	L	Red L63
Gray scale of Green	Black	L	L	L	L	L	L	L	L	L	L	L	L	L	L	L	L	L	L	L0
	Dark ↑ ↓ Light	L	L	L	L	L	L	L	L	L	L	L	H	L	L	L	L	L	L	L1
		L	L	L	L	L	L	L	L	L	L	H	L	L	L	L	L	L	L	L2
		:						:						:						L3…L60
		L	L	L	L	L	L	H	H	H	H	L	H	L	L	L	L	L	L	L61
		L	L	L	L	L	L	H	H	H	H	H	L	L	L	L	L	L	L	L62
	Green	L	L	L	L	L	L	H	H	H	H	H	H	L	L	L	L	L	L	Green L63
Gray scale of Blue	Black	L	L	L	L	L	L	L	L	L	L	L	L	L	L	L	L	L	L	L0
	Dark ↑ ↓ Light	L	L	L	L	L	L	L	L	L	L	L	L	L	L	L	L	L	H	L1
		L	L	L	L	L	L	L	L	L	L	L	L	L	L	L	L	H	L	L2
		:						:						:						L3…L60
		L	L	L	L	L	L	L	L	L	L	L	L	H	H	H	H	L	H	L61
		L	L	L	L	L	L	L	L	L	L	L	L	H	H	H	H	H	L	L62
	Blue	L	L	L	L	L	L	L	L	L	L	L	L	H	H	H	H	H	H	Blue L63
Gray scale of White & Black	Black	L	L	L	L	L	L	L	L	L	L	L	L	L	L	L	L	L	L	L0
	Dark ↑ ↓ Light	L	L	L	L	L	H	L	L	L	L	L	H	L	L	L	L	L	H	L1
		L	L	L	L	H	L	L	L	L	L	H	L	L	L	L	L	H	L	L2
		:						:						:						L3…L60
		H	H	H	H	L	H	H	H	H	H	L	H	H	H	H	H	L	H	L61
		H	H	H	H	H	L	H	H	H	H	H	L	H	H	H	H	H	L	L62
	White	H	H	H	H	H	H	H	H	H	H	H	H	H	H	H	H	H	H	White L63

The information contained in this document is the exclusive property of HannStar Display Corporation. It shall not be disclosed, distributed or reproduced in whole or in part without written permission of HannStar Display Corporation.

5.0 INTERFACE PIN CONNECTION

5.1 **TFT LCD Module：** **CN1** (Input signal): IPEX 20455-040E-12 (IPEX or equivalent)

Pin	Signal	Description
1	GND	Ground
2	AVDD	PowerSupply,3.3V(typical)
3	AVDD	PowerSupply,3.3V(typical)
4	DVDD	DDC3.3V power
5	CABC_EN	CABC function enable/disable Default 0: Disable
6	SCL	DDC Clock
7	SDA	DDC Data
8	Rin0-	- LVDSdifferential data input
9	Rin0+	+ LVDSdifferential data input
10	GND	Ground
11	Rin1-	- LVDSdifferential data input
12	Rin1+	+ LVDSdifferential data input
13	GND	Ground
14	Rin2-	- LVDSdifferential data input
15	Rin2+	+ LVDSdifferential data input
16	GND	Ground
17	ClkIN-	- LVDSdifferential data input
18	ClkIN+	+ LVDSdifferential data input
19	GND	Ground
20	VDDA_EN	VDDA on/off
21	NC	No Connection
22	GND	Ground
23	NC	No Connection
24	NC	No Connection
25	GND	Ground
26	NC	No Connection
27	NC	No Connection
28	GND	Ground
29	NC	No Connection
30	NC	No Connection
31	VLED_GND	LED Ground
32	VLED_GND	LED Ground
33	VLED_GND	LED Ground
34	NC	No Connection
35	PWM	System PWM Signal Input
36	VLED_EN	LED enable pin(+3.3V input)/VLED on/off

The information contained in this document is the exclusive property of HannStar Display Corporation. It shall not be disclosed, distributed or reproduced in whole or in part without written permission of HannStar Display Corporation.

37	NC	No Connection
38	VLED	LED Power Supply5V
39	VLED	LED Power Supply5V
40	VLED	LED Power Supply5V

Note：The brightness of LCD panel could be changed by adjusting PWM

[Note]

(1) ADJ can adjust brightness to control Pin. Pulse duty the bigger the brighter.

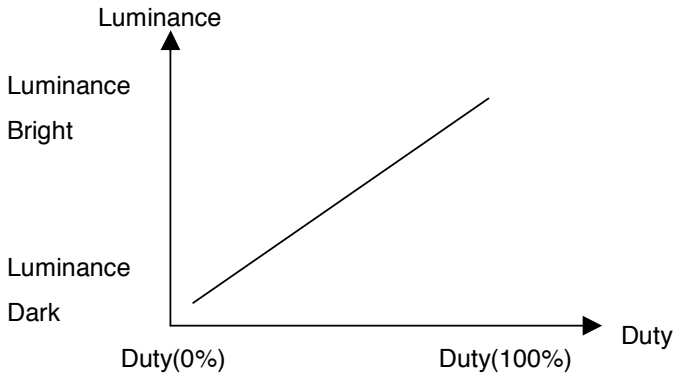

(2) ADJ Signal=0~3.3V，Operation Conditions：

Parameter	Symbol	Conditions	Min	Typ	Max	Unit
ADJ Logic-High Level	V_{ADJH}		1.8	3.3	3.6	V
ADJ Logic-Low Level	V_{ADJL}		0	0	0.4	V
Dimming Frequency	F_{ADJ}		18	20	22	kHz
Dimming Duty Cycle	D		20	--	100	%

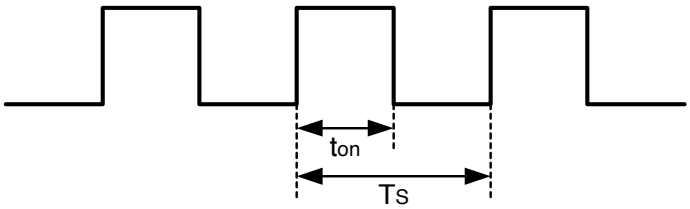

$D = t_{on} / T_S \times 100\%$

$F_{ADJ} = 1 / T_S$

The information contained in this document is the exclusive property of HannStar Display Corporation. It shall not be disclosed, distributed or reproduced in whole or in part without written permission of HannStar Display Corporation.

(3) VLED_EN & VDDA_EN ，Operation Conditions：

Parameter	Symbol	Min	Typ	Max	Units	Remark
LED enable pin (control LED driver circuit on/off)	LED_EN (H)	3.0	3.3	3.6	Volt	LED on
	LED_EN (L)	--	0	0.2		LED off
VDD on/off signal (control Panel VDD power source on/off)	VDDA_EN (H)	3.0	3.3	3.6	Volt	VDD on
	VDDA_EN (L)	--	0	0.2		VDD off

The information contained in this document is the exclusive property of HannStar Display Corporation. It shall not be disclosed, distributed or reproduced in whole or in part without written permission of HannStar Display Corporation.

6.0 ELECTRICAL CHARACTERISTICS

6.1 TFT LCD Module

Item	Symbol	Min.	Typ.	Max.	Unit	Note
Supply Voltage	V_{DD}	3.0	3.3	3.6	V	Note (1)
Current of power supply	IDD	-	(0.19)	-	A	V_{DD} =3.3V Ta=25℃ fv=60Hz Note (2)(3)
Inrush current	I_{RUSH}	-	-	1.50	A	Note (4)

Note : (1) V_{DD}-dip condition :

When VDD operating within 2.7V≦VDD<3.0V，td≦10ms , the display may momentarily become abnormal .

VDD<2.7V, VDD dip condition should also follow the Power On/Off conditions for supply voltage.

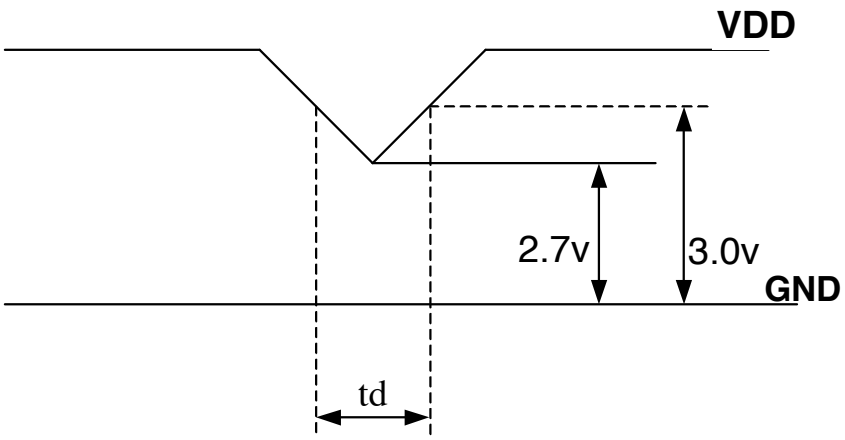

(2) Maximum Measurement Condition: Black Pattern

(3) Typical Measurement Condition: Mosaic Pattern

The information contained in this document is the exclusive property of HannStar Display Corporation. It shall not be disclosed, distributed or reproduced in whole or in part without written permission of HannStar Display Corporation.

(4) Power on Inrush current test circuit

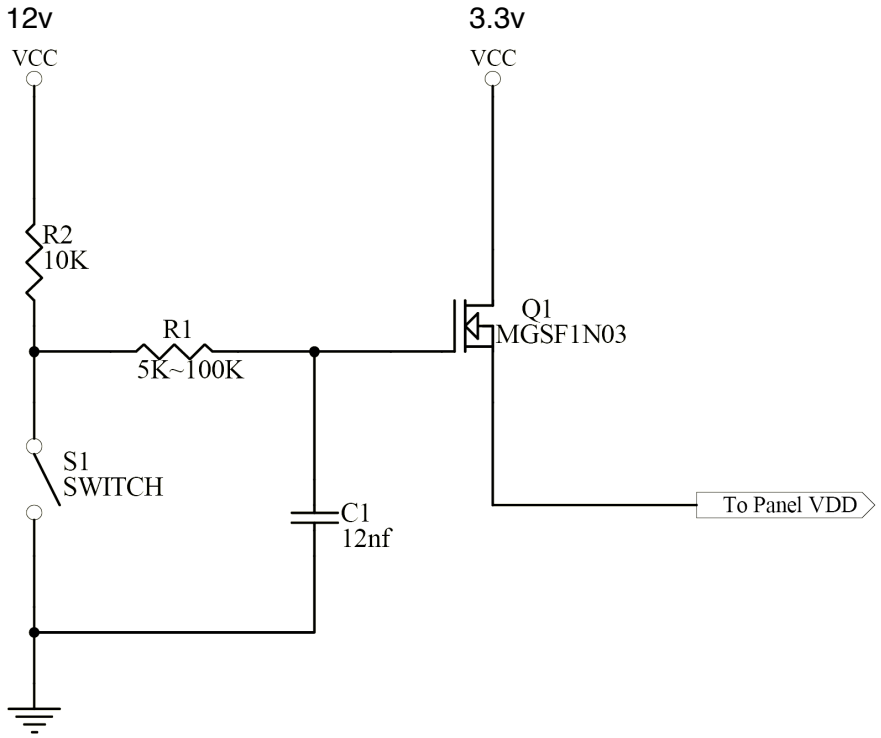

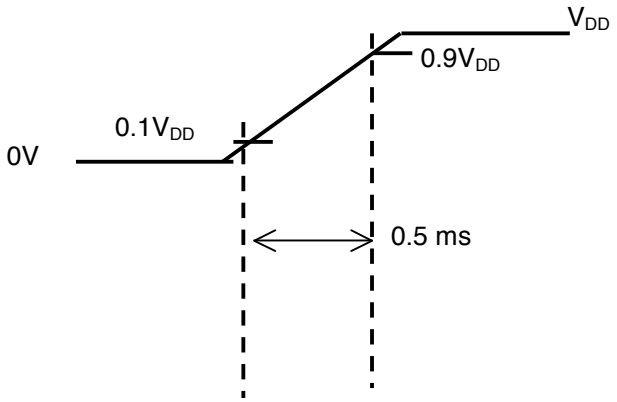

V_{in} rising time

The information contained in this document is the exclusive property of HannStar Display Corporation. It shall not be disclosed, distributed or reproduced in whole or in part without written permission of HannStar Display Corporation.

6.2 Switching Characteristics for LVDS Receiver

Item	Symbol	Min.	Typ.	Max.	Unit	Conditions
Differential Input High Threshold	Vth	—	—	100	mV	V_{CM}=1.2V
Differential Input Low Threshold	Vtl	-100	—	—	mV	
Input Current	I_{IN}	-10	—	+10	uA	
Differential input Voltage	$\lvert V_{ID} \rvert$	0.1	—	0.6	V	
Common Mode Voltage Offset	V_{CM}	($\lvert V_{ID} \rvert$/2)	1.25	1.8-0.4-($\lvert V_{ID} \rvert$/2)	V	

6.3 Bit Mapping & Interface Definition

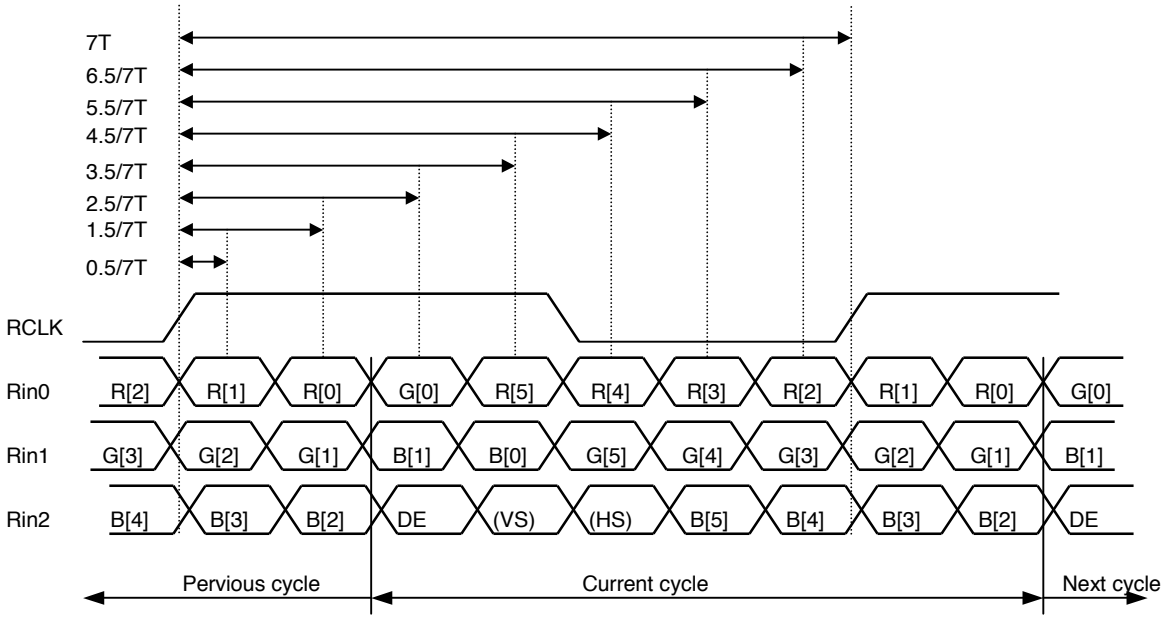

LVDS Receiver Input Timing Definition

for 6bits LVDS input

The information contained in this document is the exclusive property of HannStar Display Corporation. It shall not be disclosed, distributed or reproduced in whole or in part without written permission of HannStar Display Corporation.

6.4 Interface Timing (DE mode)

Item	Symbol	Min.	Typ.	Max.	Unit
Frame Rate	--	55	60	65	Hz
Frame Period	t1	612	625	638	line
Vertical Display Time	t2	600	600	600	line
Vertical Blanking Time	t3	12	25	38	line
1 Line Scanning Time	t4	1160	1200	1240	clock
Horizontal Display Time	t5	1024	1024	1024	clock
Horizontal Blanking Time	t6	136	176	216	clock
Clock Rate	t7	39	45	51.42	MHz

Timing Diagram of Interface Signal (DE mode)

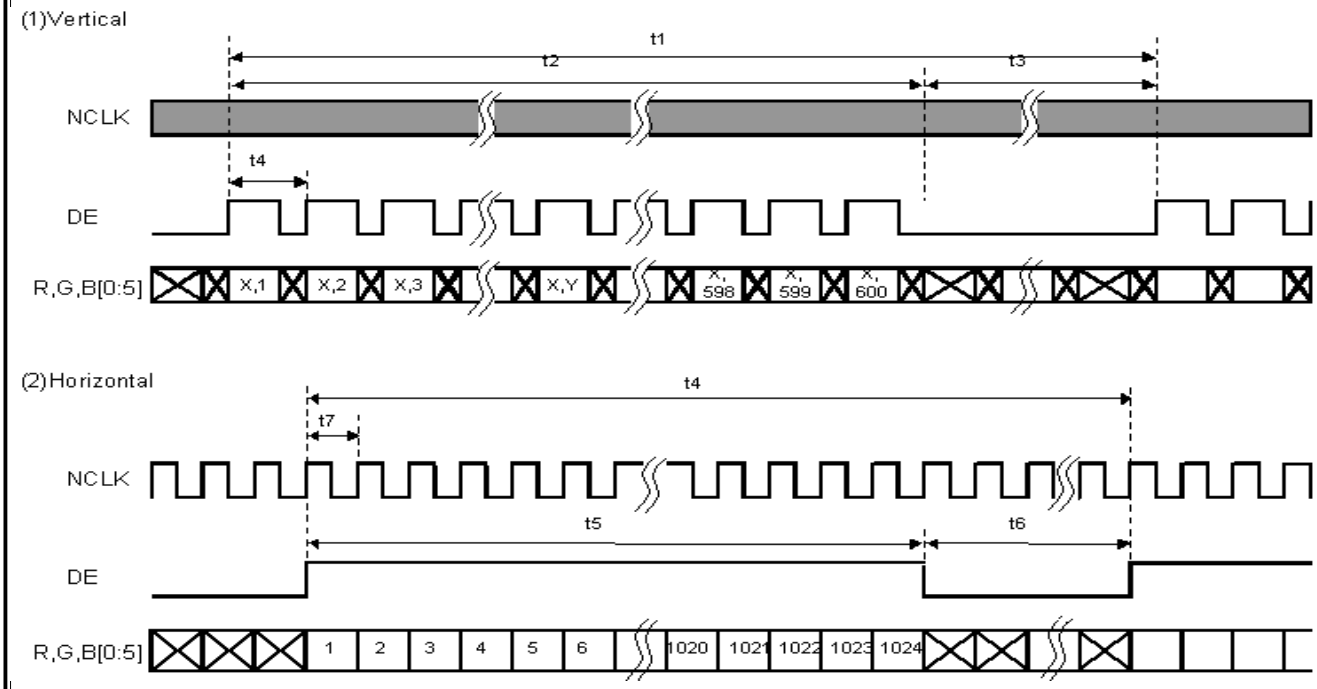

The information contained in this document is the exclusive property of HannStar Display Corporation. It shall not be disclosed, distributed or reproduced in whole or in part without written permission of HannStar Display Corporation.

6.5 Power On / Off Sequence

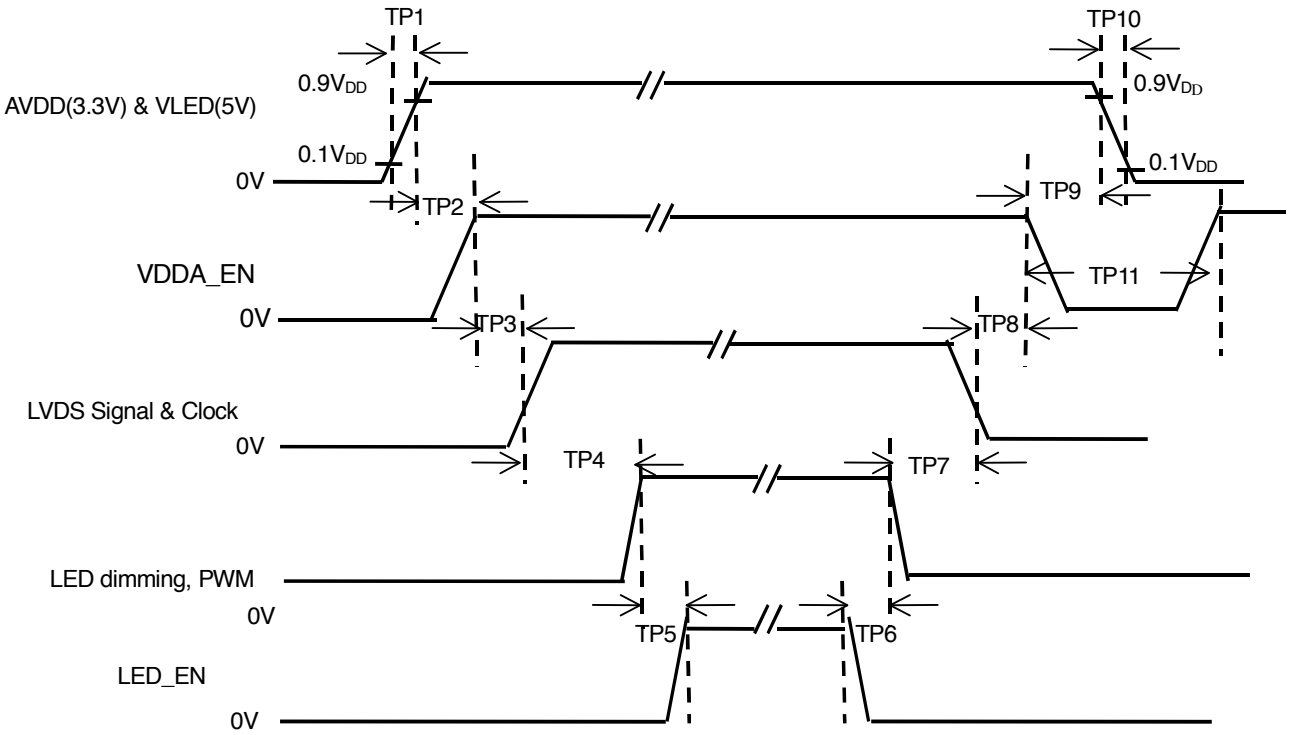

Item	Min.	Typ.	Max.	Unit	Remark
TP1	0.5	--	10	msec	
TP2	10	--	--	msec	
TP3	30	40	90	msec	
TP4	200	--	--	msec	
TP5	10	--	--	msec	
TP6	0	--	--	msec	
TP7	110	--	--	msec	
TP8	0	16	80	msec	
TP9	0	--	--	msec	Must exceed 0
TP10	--	10	30	msec	
TP11	1000	--	--	msec	

The information contained in this document is the exclusive property of HannStar Display Corporation. It shall not be disclosed, distributed or reproduced in whole or in part without written permission of HannStar Display Corporation.

Note：(1) The supply voltage of the external system for the module input should be the same as the definition of V_{DD}.

(2) Apply the lamp volatge within the LCD operation range. When the back-light turns on before the LCD operation or the LCD truns off before the back-light turns off, the display may momentarily become white.

(3) In case of VDD = off level, please keep the level of input signal on the low or keep a high impedance.

(4) TP4 should be measured after the module has been fully discharged between power off and on period.

(5) Interface signal shall not be kept at high impedance when the power is on.

6.6 Backlight Unit

Parameter	Symbol	Min	Typ	Max	Units	Condition
LED Current	I_F	--	(17.5)	(18.55)	mA	Ta=25℃
LED Voltage	V_F	3.0	3.2	3.4	Volt	Ta=25℃
LED Power consumption	P_{LED}	--	(1.34)	(1.51)	Watt	Ta=25℃ Note (1)
LED Life-Time	N/A	10,000	--	--	Hour	Ta=25℃ I_F=20mA Note (2)

Note (1): Calculator value for reference $P=I_F \times V_F \times N$ (LED Qty')

Note (2): The LED lifetime defines as the estimated time to 50% degradation of final luminous.

6.7 LED Driver

6.7.1 Absolute Maximum Ratings

Item	Symbol	Min.	Max.	Unit	Note
LED Power Supply voltage	V_{LED}	-0.3	6	Volt	
LED_EN, PWM pin Voltage	V_{EN}, V_{PWM}	--	5.5	Volt	

The information contained in this document is the exclusive property of HannStar Display Corporation. It shall not be disclosed, distributed or reproduced in whole or in part without written permission of HannStar Display Corporation.

6.7.2 DC Electrical Characteristics

Parameter	Symbol	Min	Typ	Max	Units	Remark
LED Power Supply Voltage	V_{LED}	4.5	--	5.5	Volt	
PWM High Threshold	V_{PWMH}	3.0	--	--	Volt	
PWM Low Threshold	V_{PWML}	--	--	0.2	Volt	

6.8 Color engine and CABC DC Electrical Characteristics

Parameter	Symbol	Min	Typ	Max	Units	Remark
CABC_EN High Threshold	V_{CABCH}	$0.7V_{DD}$	--	--	Volt	
CABC_EN Low Threshold	V_{CABCL}	--	--	$0.3V_{DD}$	Volt	

The information contained in this document is the exclusive property of HannStar Display Corporation. It shall not be disclosed, distributed or reproduced in whole or in part without written permission of HannStar Display Corporation.

7.0 Reliability test items

No.	Item	Conditions	Remark
1	High Temperature Storage	Ta=+60°C, 240hrs	
2	Low Temperature Storage	Ta=-20°C, 240hrs	
3	High Temperature Operation	Ta=+50°C, 500hrs	
4	Low Temperature Operation	Ta=0°C, 500hrs	
5	Thermal Cycling Test (non operation)	-20°C(30min)→+60°C(30min),100 cycles	
6	Vibration	Sine Wave 1.5G, 5~500Hz, XYZ 30min/each direction	
7	Shock	Half-Sine, 200G, 2ms, ±XYZ, 1time	

Storage / Operating temperature

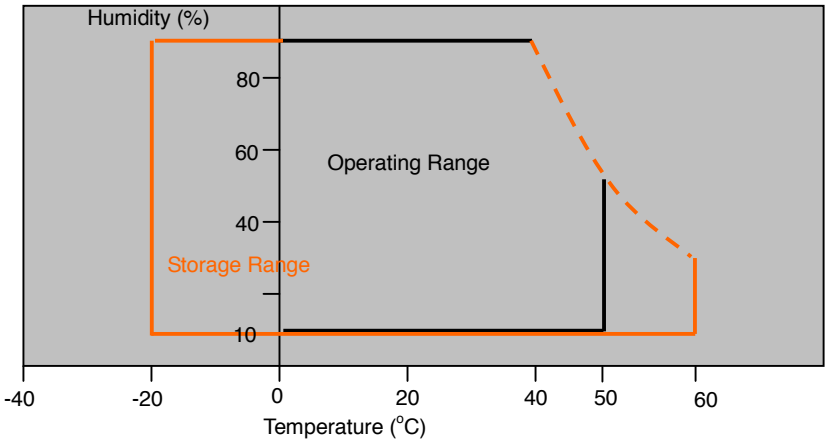

Note . Max wet bulb temp.=39°C

The information contained in this document is the exclusive property of HannStar Display Corporation. It shall not be disclosed, distributed or reproduced in whole or in part without written permission of HannStar Display Corporation.

8.0 OUTLINE DIMENSION

Unit : mm

8.1 Front View Outline Dimension

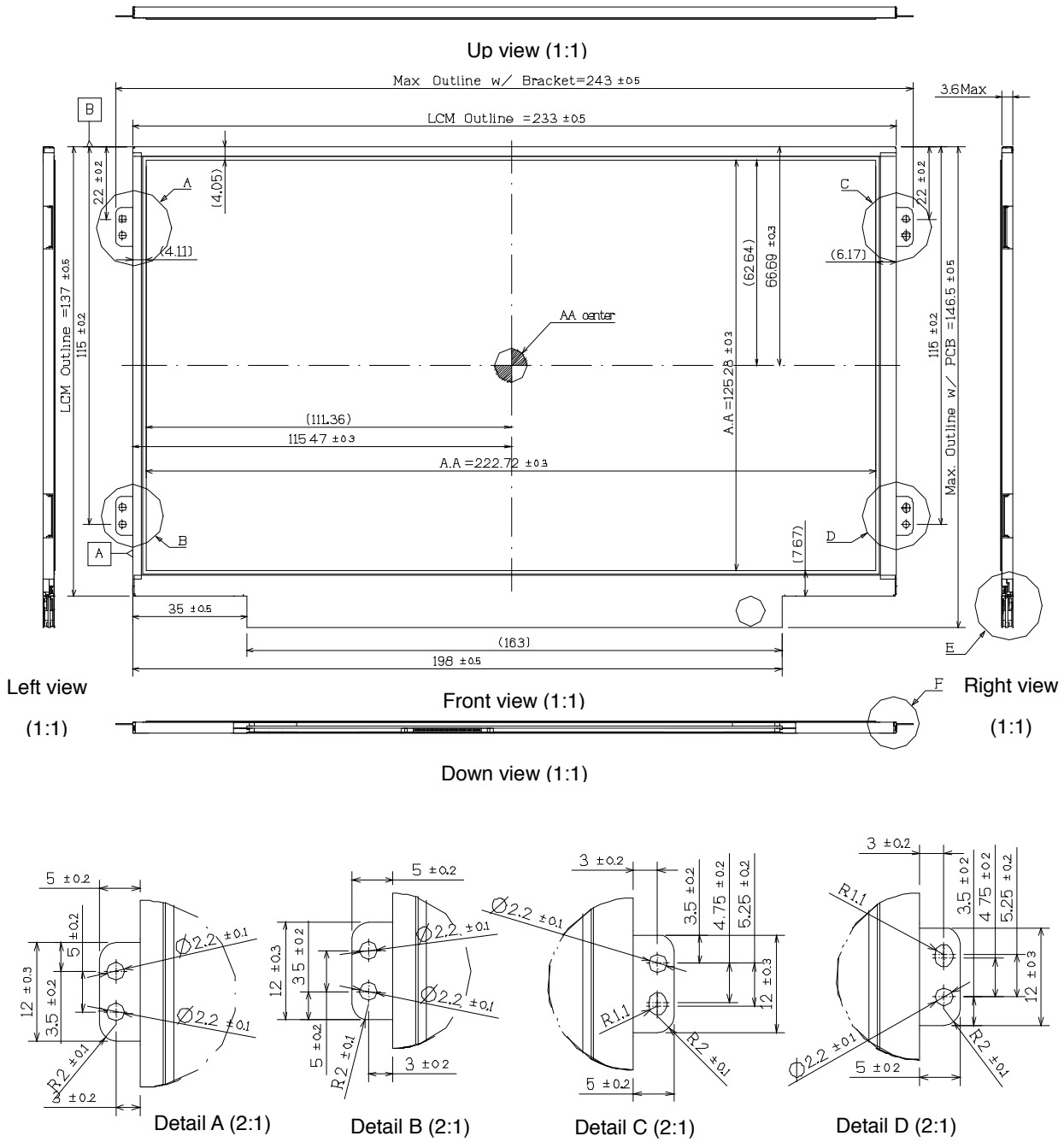

General tolerance: +/- 0.3

The information contained in this document is the exclusive property of HannStar Display Corporation. It shall not be disclosed, distributed or reproduced in whole or in part without written permission of HannStar Display Corporation.

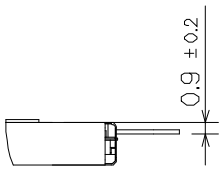

Detail F (2:1)

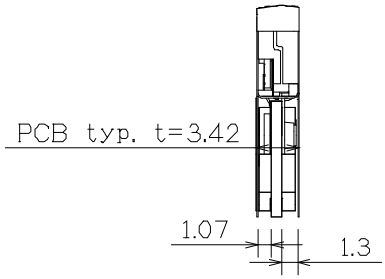

Detail E (2:1)

8.2 Back View Outline Dimension

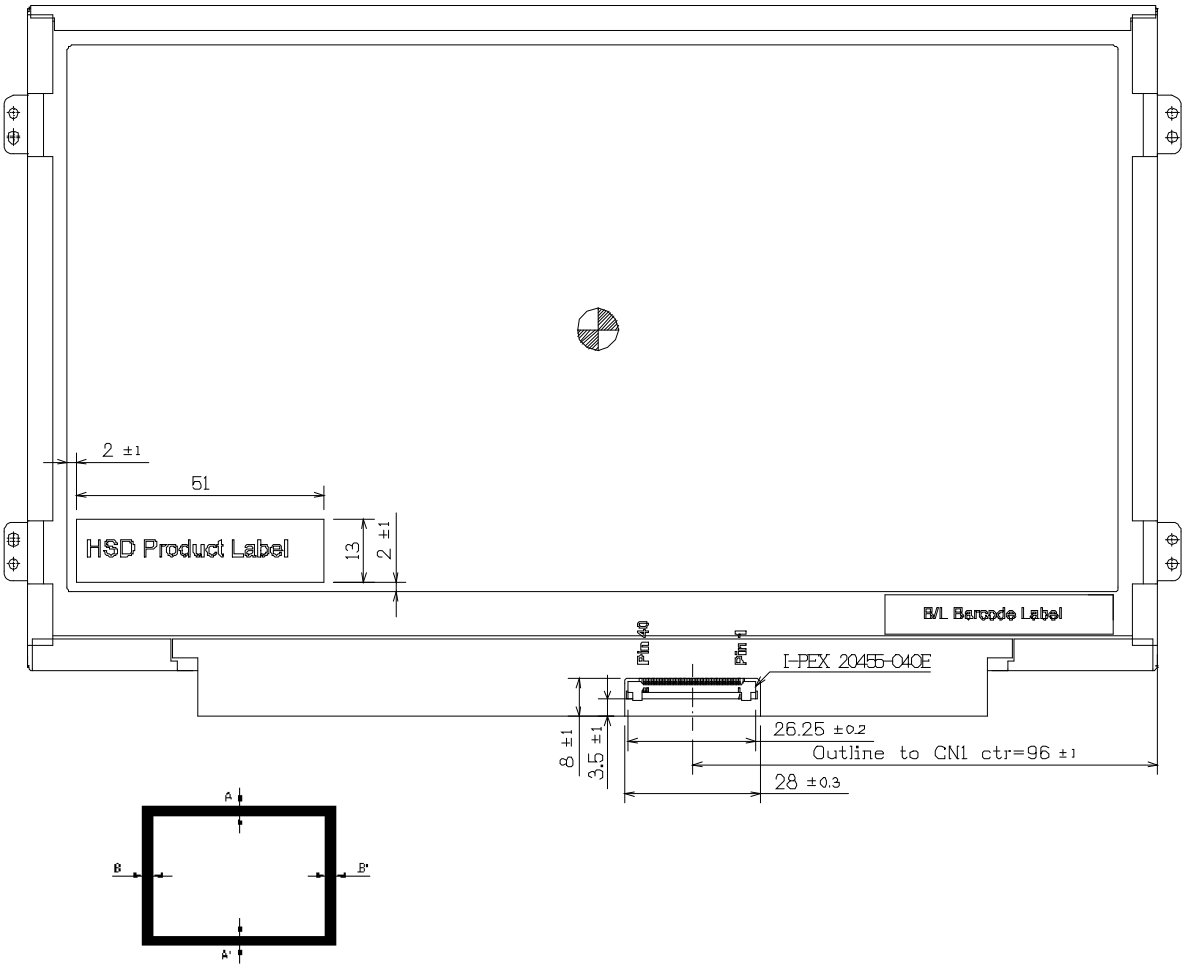

BM Assembly Tolerance

| A-A' | ≤ **1.0** (mm)

| B-B' | ≤ **1.0** (mm)

The information contained in this document is the exclusive property of HannStar Display Corporation. It shall not be disclosed, distributed or reproduced in whole or in part without written permission of HannStar Display Corporation.

9.0 LOT MARK

9.1 Lot Mark

1	2	3	4	5	6	7	8	9	10	11	12	13	14	15

Code 1,2,3,4,5,6: HannStar internal flow control code.
Code 7: production location.
Code 8: production year.
Code 9: production month.
Code 10,11,12,13,14,15: serial number.

Note (1) Production Year

Year	2001	2002	2003	2004	2005	2006	2007	2008	2009	2010
Mark	1	2	3	4	5	6	7	8	9	0

Note (2) Production Month

Month	Jan.	Feb.	Mar.	Apr.	May.	Jun.	Jul.	Aug.	Sep.	Oct	Nov.	Dec.
Mark	1	2	3	4	5	6	7	8	9	A	B	C

9.2 Location of Lot Mark

(1) Location : The label is attached to the backside of the LCD module. See Product back view. (Section 8.0 : OUTLINE DIMENSION)
(2) Detail of the Mark : As attached below
(3) This is subject to change without prior notice.

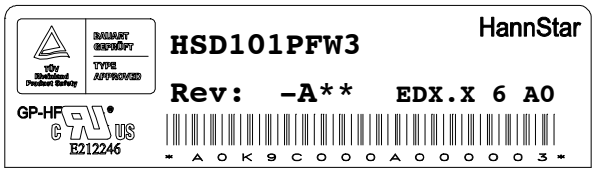

The information contained in this document is the exclusive property of HannStar Display Corporation. It shall not be disclosed, distributed or reproduced in whole or in part without written permission of HannStar Display Corporation.

10.0 PACKAGE SPECIFICATION

10.1 Packing form

LCM Model	LCM Qty. in the box	Inner Box Size (mm)	Notice
HSD101PFW3-A	40pcs/box	565x316 x240 H	

10.2 Packing assembly drawings

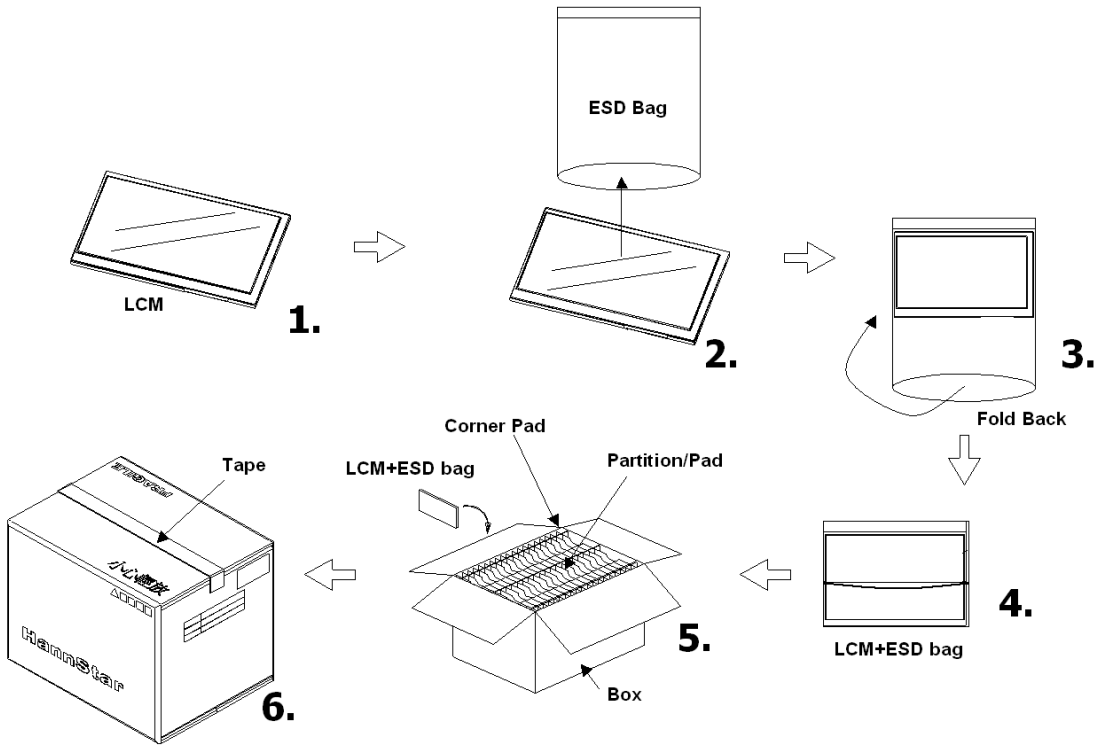

HSD101PFW3-A	Material	Notice
Box	Corrugated Paper Board	AB Flute
Partition/Pad	Corrugated Paper Board	B Flute
Pad	Corrugated Paper Board	B Flute
ESD bag	PE	--

The information contained in this document is the exclusive property of HannStar Display Corporation. It shall not be disclosed, distributed or reproduced in whole or in part without written permission of HannStar Display Corporation.

11.0 GENERAL PRECAUTION

11.1 Use Restriction

This product is not authorized for use in life supporting systems, aircraft navigation control systems, military systems and any other application where performance failure could be life-threatening or otherwise catastrophic.

11.2 Disassembling or Modification

Do not disassemble or modify the module. It may damage sensitive parts inside LCD module, and may cause scratches or dust on the display. HannStar does not warrant the module, if customers disassemble or modify the module.

11.3 Breakage of LCD Panel

11.3.1.If LCD panel is broken and liquid crystal spills out, do not ingest or inhale liquid crystal, and do not contact liquid crystal with skin.

11.3.2. If liquid crystal contacts mouth or eyes, rinse out with water immediately.

11.3.3. If liquid crystal contacts skin or cloths, wash it off immediately with alcohol and rinse thoroughly with water.

11.3.4. Handle carefully with chips of glass that may cause injury, when the glass is broken.

11.4 Electric Shock

11.4.1. Disconnect power supply before handling LCD module.

11.4.2. Do not pull or fold the LED cable.

11.4.3. Do not touch the parts inside LCD modules and the fluorescent LED's connector or cables in order to prevent electric shock.

11.5 Absolute Maximum Ratings and Power Protection Circuit

11.5.1. Do not exceed the absolute maximum rating values, such as the supply voltage variation, input voltage variation, variation in parts' parameters, environmental temperature, etc., otherwise LCD module may be damaged.

11.5.2. Please do not leave LCD module in the environment of high humidity and high temperature for a long time.

11.5.3. It's recommended to employ protection circuit for power supply.

11.6 Operation

11.6.1 Do not touch, push or rub the polarizer with anything harder than HB pencil lead.

11.6.2 Use fingerstalls of soft gloves in order to keep clean display quality, when persons handle the LCD module for incoming inspection or assembly.

11.6.3 When the surface is dusty, please wipe gently with absorbent cotton or other soft material.

The information contained in this document is the exclusive property of HannStar Display Corporation. It shall not be disclosed, distributed or reproduced in whole or in part without written permission of HannStar Display Corporation.

11.6.4 Wipe off saliva or water drops as soon as possible. If saliva or water drops contact with polarizer for a long time, they may causes deformation or color fading.

11.6.5 When cleaning the adhesives, please use absorbent cotton wetted with a little petroleum benzine or other adequate solvent.

11.7 Mechanism

Please mount LCD module by using mounting holes arranged in four corners tightly.

11.8 Static Electricity

11.8.1 Protection film must remove very slowly from the surface of LCD module to prevent from electrostatic occurrence.

11.8.2 Because LCD module use CMOS-IC on circuit board and TFT-LCD panel, it is very weak to electrostatic discharge. Please be careful with electrostatic discharge. Persons who handle the module should be grounded through adequate methods.

11.9 Strong Light Exposure

The module shall not be exposed under strong light such as direct sunlight. Otherwise, display characteristics may be changed.

11.10 Disposal

When disposing LCD module, obey the local environmental regulations.

The information contained in this document is the exclusive property of HannStar Display Corporation. It shall not be disclosed, distributed or reproduced in whole or in part without written permission of HannStar Display Corporation.