PROPRIETARY NOTE
THIS SPECIFICATION IS THE PROPERTY OF HYDIS AND SHALL NOT BE REPRODUCED OR COPIED WITHOUT THE WRITTEN PERMISSION OF HYDIS AND MUST BE RETURNED TO HYDIS UPON ITS REQUEST

TITLE : HVA42WV1-M00

Product Specification

HYDIS Technologies

SPEC. NUMBER	PRODUCT GROUP	REV.	ISSUE DATE	PAGE
S864-1465	TFT PRODUCTS	D	2012.07.09	1 OF 53

REVISION HISTORY

REV.	ECN NO.	DESCRIPTION OF CHANGES	DATE	PREPARED
0		▪ Initial Release	12.02. 22	I.H.KIM
A	E1203-F002	▪ PACKING INFORMATION (Page 47, 48) - Module per Inner Box : 48EA → 54EA - Packing Quantity in One Box : 240EA → 270EA	12.03. 21	I.H.KIM
B	E1205-F009	▪ Power Consumption (Page. 9) - Sleep mode was omitted	12.05.23	I.H.KIM
C	E1206-F003	▪ Weight and measure units by law - 4.2 inch →4.19” (106.4mm) ▪ TFT-LCD Module Outline Dimension (Page 52) - Additional Silk Guide for TSP Connector	12.06. 13	I.H.KIM
D	E1207-F002	▪ Changed specification of Box Label (Page 46) - 'PO Type XX' text added	12.07.09	Y.W.CHOI

Contents

No	ITEM	Page
	REVISIONS HISTORY	2
	CONTENTS	3
1	GENERAL DESCRIPTION	4
	1.1 Introduction	
	1.2 Features	
	1.3 Applications	
	1.4 General Specification	
2	ABSOLUTE MAXIMUM RATINGS	6
3	OPTICAL SPECIFICATIONS	7
4	ELECTRICAL SPECIFICATIONS	9
	4.1 TFT LCD Module	
	4.2 Back-Light Unit	
5	INTERFACE CONNECTION	11
	5.1 Electrical Interface Connection	
	5.2 Input signal, Basic Display Colors and Gray Scale of Each Colors	
6	INTERFACE SPECIFICATION	13
	6.1 SPI Interface	
	6.2 RGB Interface	
7	REGISTER RESET CONDITION	19
8	TFT-LCD DRIVER IC CONTROL ALGORITHMS	24
	8.1 Initial Sequence of LCD (Power supply setting)	
	8.2 Power On/Off Sequence of LCD	
	8.3 Display On/Off Sequence of LCD	
	8.4 Sleep and Deep Standby mode LCD	
9	MECHANICAL CHARACTERISTICS	43
10	RELIABLITY TEST	44
11	LABEL	45
12	PACKING SPECIFICATION	47
13	HANDLING & CAUTIONS	49
14	APPENDIX	50

1.0 GENERAL DESCRIPTION

1.1 Introduction

4.19” (106.4mm) WVGA aRD is a color active matrix TFT LCD module using amorphous silicon TFT’s (Thin Film Transistors) as an active switching devices. This Model is composed of a Transmissive TFT LCD panel, a drive IC driver circuit and a backlight unit. This module has a LCD 4.19” (106.4mm) diagonally measured active area with 480 × RGB × 800 resolutions. This module can display 16.7M colors.

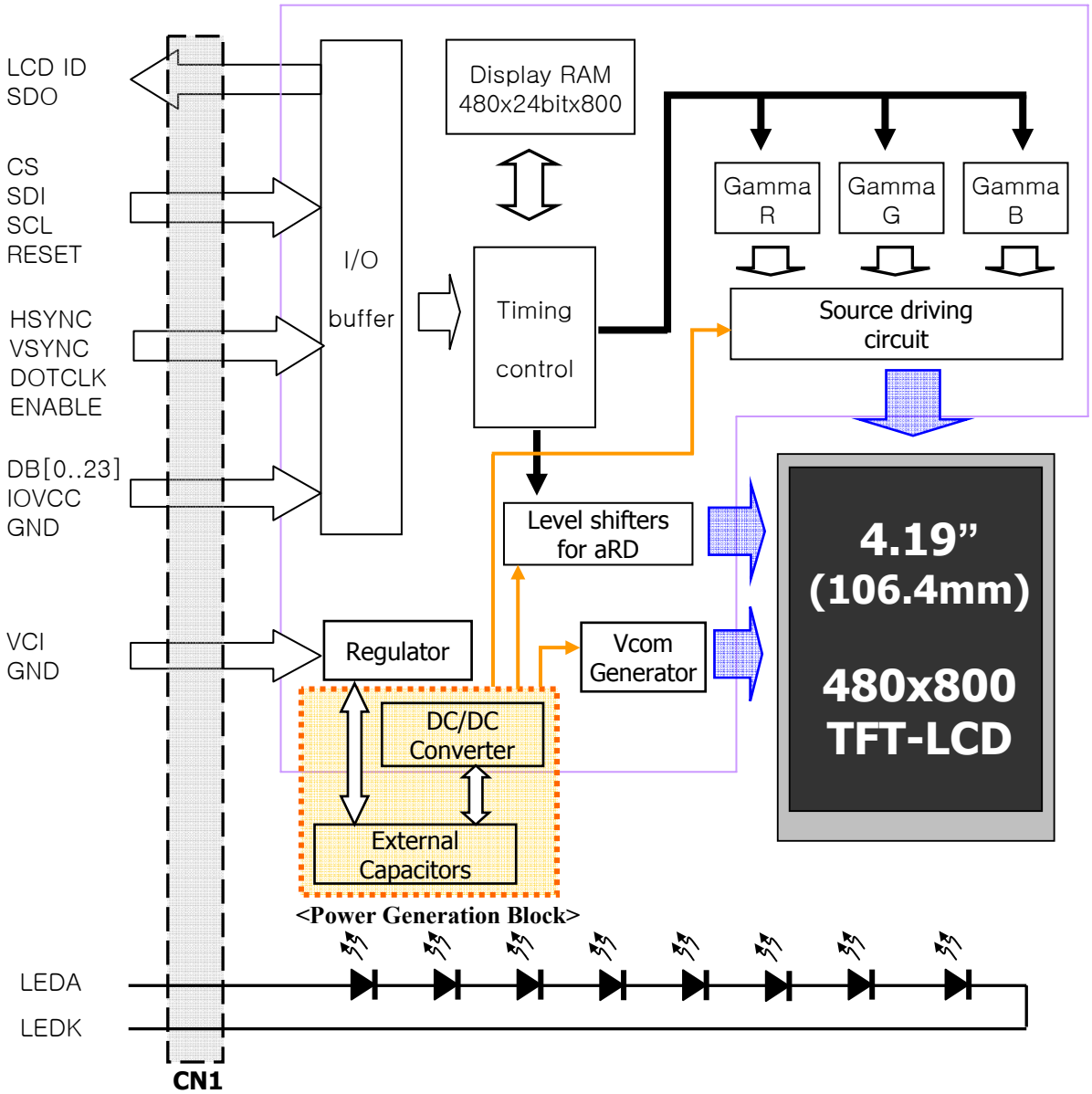

1.2 Features

- High Resolution & Wide View (HFFS Technology)
- aRD (a-Si Row Driver) Technology
- LCD Driver : NT35510
- Serial & 24 bit RGB I/F (16.7M Colors)
- Sleep, Moving mode display
- Green Product (RoHS Compliant)

1.3 Applications

- Smart Phone

1.4 General Specification

The followings are general specification at the model 4.19” (106.4mm) WVGA aRD

< Table 1. General Specification >

Parameter	Specification	Unit	Remarks
Active area	54.72(H) × 91.20(V)	mm	
Number of pixels	480(H) × 800(V)	pixels	
Pixel pitch	0.114(H) × 0.114(V)	mm	
Pixel arrangement	RGB Vertical stripe		
Display colors	16.7M	colors	
Display mode	Normally Black		
Dimensional outline	59.12 (H) X 100.15 (V) X 1.8 (T)	mm	W/O FPCB
Weight	25.5 (typ.) / 28 (max.)	gram	
Back-light	8-LEDs serial type		White LED

2.0 ABSOLUTE MAXIMUM RATINGS

The followings are maximum values which, if exceed, may cause faulty operation or damage to the unit. The operational and non-operational maximum voltage and current values are listed in Table 2.

< Table 2. Absolute Maximum Ratings > [VSS=GND=0V]

Parameter	Symbol	Min.	Max.	Unit	Remarks
Power Input Voltage	VCC	VSS-0.3	4.5	V	Ta = 25 ℃
Power Input Voltage	IOVCC	VSS-0.3	4.5	V	
Storage Humidity	H_{STG}	10	90	% (RH)	Note 1
Storage Temperature	T_{STG}	-30	+80	℃	
Operating Humidity	H_{OPR}	15	90	% (RH)	
Operating Temperature	T_{OPR}	-20	+60	℃	

Note :

1. Temperature and relative humidity range are shown in the figure below.
   90% RH Max. (50℃ ≥ Ta)

※ Maximum wet - bulb temperature at 39℃ or less. (> 40℃) No condensation.

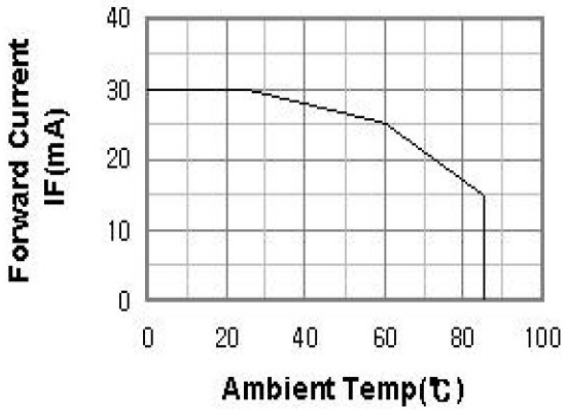

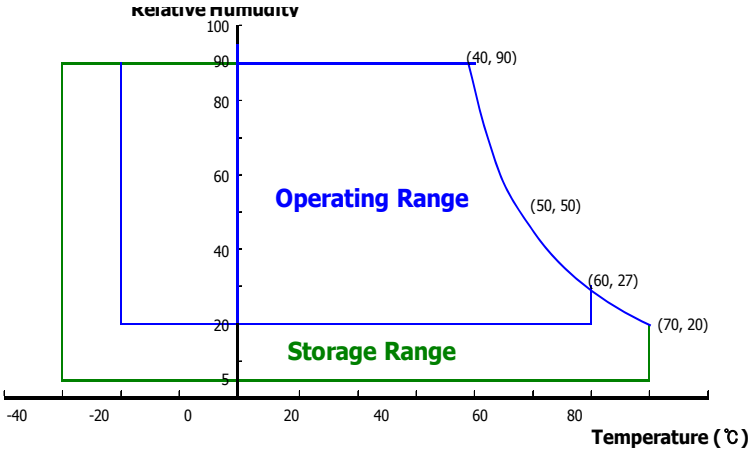

3.0 OPTICAL SPECIFICATIONS

The test of Optical specification shall be measured in a dark room (ambient luminance ≤ 1 lux and temperature = 25±2℃) with the equipment of Luminance meter system (Goniometric system and TOPCON BM-5) and test unit shall be located at an approximate distance 50cm from the LCD surface at a viewing angle of Θ and Φ equal to 0°. We refer to $\Theta_{Ø=0}$ (=Θ_3) as the 3 o'clock direction (the "right"), $\Theta_{Ø=90}$ (= Θ_{12}) as the 12 o'clock direction ("upward"), $\Theta_{Ø=180}$ (= Θ_9) as the 9 o'clock direction ("left") and $\Theta_{Ø=270}$(= Θ_6) as the 6 o'clock direction ("bottom"). While scanning Θ and/or Ø, the center of the measuring spot on the Display surface shall stay fixed. The backlight should be operating for 30 minutes prior to measurement.

< Table 3. Optical Specifications >

Parameter		Symbol	Condition	Min	Typ	Max	Unit	Remark
Viewing Angle	Horizontal	Θ_3	CR > 10	80	85	89	Deg.	Note 1
		Θ_9		80	85	89	Deg.	
	Vertical	Θ_{12}		80	85	89	Deg.	
		Θ_6		80	85	89	Deg.	
Contrast ratio		CR	Θ = 0°	700	900	1300		Note 2
Luminance of White		Y_w		340	420	500	cd/m^2	Note 4
White Luminance uniformity		Δ Y9		80	90	-	%	
Color Gamut		Gamut		55	60	-	%	Note 3
White Balance		CCT		6500	7500	8500	˚K	
		duv		0	0.01	0.02		
Reproduction of color	Red	R_x		0.620	0.640	0.660		
		R_y		0.323	0.343	0.363		
	Green	G_x		0.300	0.330	0.360		
		G_y		0.562	0.592	0.622		
	Blue	B_x		0.137	0.157	0.177		
		B_y		0.095	0.115	0.135		
Response Time (T_r + T_d)			Ta= 25° C	20	30	40	ms	Note 5
Cross Talk		CT	Θ = 0°	-	-	2.0	%	Note 6

Note :

1. Viewing angle is the angle at which the contrast ratio is greater than 10. The viewing are determined for the horizontal or 3, 9 o'clock direction and the vertical or 6, 12 o'clock direction with respect to the optical axis which is normal to the LCD surface. (see Figure1 in Appendix).
2. Contrast measurements shall be made at viewing angle of Θ= 0 and at the center of the LCD surface. Luminance shall be measured with all pixels in the view field set first to white, then to the dark (black) state. (See Figure 2 shown in Appendix). Luminance Contrast Ratio (CR) is defined mathematically.

$$CR = \frac{\text{Luminance when displaying a white raster}}{\text{Luminance when displaying a black raster}}$$

3. The color chromaticity coordinates specified in Table 2 shall be calculated from the spectral data measured with all pixels first in red, green, blue and white. Measurements shall be made at the center of the C/F with the Polarizer.
4. The White luminance uniformity on LCD surface is then expressed as :

   ΔY = (Minimum Luminance of 9 points / Maximum Luminance of 9 points) * 100

   (See Figure 2 shown in Appendix).
5. The electro-optical response time measurements shall be made as Figure 3 shown in Appendix by switching the "data" input signal ON and OFF. The times needed for the luminance to change from 10% to 90% is Tr, and 90% to 10% is Td.
6. Cross-Talk of one area of the LCD surface by another shall be measured by comparing the luminance (YA) of a 25mm diameter area, with all display pixels set to a gray level, to the luminance (YB) of that same area when any adjacent area is driven white

   (Refer to Figure 4 in Appendix)

$$\text{Cross-Talk (\%)} = \left| \frac{Y_B - Y_A}{Y_B} \right| \times 100$$

4.0 ELECTRICAL SPECIFICATIONS

4.1 TFT LCD Module

< Table 4. LCD Module Electrical Specification > [Ta =25±2 ℃]

Parameter		Symbol	Values			Unit	Remark
			Min	Typ	Max		
Interface Power Supply Voltage		IOVCC	1.65	1.8	3.3	V	
Analog Circuit Supply Voltage		VCC	2.3	3.0	4.8	V	
Frame Frequency		f_{FRAME}		58		Hz	
Main Clock Frequency		f_{CLK}		24.5		MHz	
Logic signal input voltage		V_{IH}	0.7IOVCC	-	IOVCC	V	
		V_{IL}	VSSI	-	0.3IOVCC		
Logic signal output voltage		V_{OH}	0.8IOVCC		IOVCC	V	
		V_{OL}	VSSI		0.2IOVCC		
Input leak current		I_{LI}	-1		1	μA	VI = GND ~IOVCC
Output leak current		O_{LI}	-1		1		VO = GND ~ IOVCC
Power Consumption	16.7M	$P_{16.7M}$	-	60	75	mW	Note 1, 3, 4, 5
	Deep Standby mode	P_{Std}			0.15	mW	Note 2

Note : This power consumption is only circuit, which is excluded for Back light unit

1. In 16.7M Color mode, Display data consists of 8bits each for R, G, B.
2. In Deep Standby mode, Display operation is ALL completely halted. So called " leakage current"
3. Display Pattern at Typ. Power Consumption is "ColorBar Pattern" as followers.
   1) White
   2) Yellow
   3) Cyan
   4) Green
   5) Magenta
   6) Red
   7) Blue
   8) Black

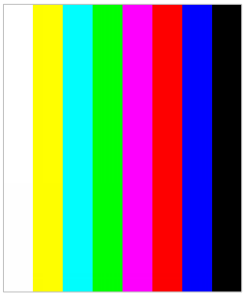

4. Display Pattern at Min. Power Consumption is "Black Pattern" in case of this module. (@58Hz)
5. Display Pattern at Max. Power Consumption is "White Pattern" in case of this module. (@58Hz)

4.2 Back-Light Unit

< Table 5. Back-Light Unit Electrical Specification > [Ta =25±2 ℃]

Parameter	Symbol	Values			Unit	Remark
		Min	Typ	Max		
LED Forward Voltage	V_F	2.8	2.9	3.0	V	
LED Forward Current	I_F		15		mA	
Back-light LED Total Voltage	V_{BL}		23.2	24	V	Note 1
Back-light LED Total Current	I_{BL}		15		mA	
Back-light Power Consumption	P_{BL}		348	360	mW	Note 2

Note :

1. The power supply voltage and current is measured and specified at the interface connector of LCM.
2. Calculated value for reference ($V_F \times I_F \times$ # of LEDs (8EA)).

5.0 INTERFACE CONNECTION

5.1 Electrical Interface Connection

< Table 6. Electrical Interface Connection Specification >

CN1	User Side Connector	24-5802-054-002-829 (Kyocera)

Pin No	Symbol	Description	Pin No	Symbol	Description
1	LEDK	Cathode for LED	2	LEDA	Anode for LED
3	LEDK	Cathode for LED	4	LEDA	Anode for LED
5	RESET	Reset	6	IOVCC	Interface I/O Power (1.8V)
7	SCL	Serial Clock	8	DETECT	
9	SDI	Serial Data	10	CS	Chip Select
11	VSYNC	Vertical Sync	12	GND	
13	HSYNC	Horizontal Sync	14	DOTCLK	Data Clock
15	ENABLE	Data Enable	16	GND	
17	DB0	Data BLUE 0	18	GND	
19	DB2	Data BLUE 2	20	DB1	Data BLUE 1
21	DB4	Data BLUE 4	22	DB3	Data BLUE 3
23	DB6	Data BLUE 6	24	DB5	Data BLUE 5
25	DB8	Data GREEN 0	26	DB7	Data BLUE 7
27	DB10	Data GREEN 2	28	DB9	Data GREEN 1
29	DB12	Data GREEN 4	30	DB11	Data GREEN 3
31	DB14	Data GREEN 6	32	DB13	Data GREEN 5
33	DB16	Data RED 0	34	DB15	Data GREEN 7
35	DB18	Data RED 2	36	DB17	Data RED 1
37	DB20	Data RED 4	38	DB19	Data RED 3
39	DB22	Data RED 6	40	DB21	Data RED 5
41	CABC_PWM	PWM for Backlight controller	42	DB23	Data RED 7
43	VCI	Analog Power for LCD (3.0V)	44	SDO	Output for Serial Data
45	NC (MTP)	Non Connection	46	LCD_ID1	Low
47	TSP_AVDD	Analog Power for TSP	48	LCD_ID2	ADC (1.0V)
49	TSP_IOVCC	Logic Power for TSP	50	TSP_SDA	Serial Data for TSP
51	TSP_INT		52	TSP_SCL	Serial Clock for TSP
53	GND		54	GND	

5.2 Input signal, Basic Display Colors and Gray Scale of Each Colors

Colors & Gray Scale		Data signal																							
		Red data								Green data								Blue data							
		R0	R1	R2	R3	R4	R5	R6	R7	G0	G1	G2	G3	G4	G5	G6	G7	B0	B1	B2	B3	B4	B5	B6	B7
Basic Colors	Black	0	0	0	0	0	0	0	0	0	0	0	0	0	0	0	0	0	0	0	0	0	0	0	0
	Blue	0	0	0	0	0	0	0	0	0	0	0	0	0	0	0	0	1	1	1	1	1	1	1	1
	Green	0	0	0	0	0	0	0	0	1	1	1	1	1	1	1	1	0	0	0	0	0	0	0	0
	Light Blue	0	0	0	0	0	0	0	0	1	1	1	1	1	1	1	1	1	1	1	1	1	1	1	1
	Red	1	1	1	1	1	1	1	1	0	0	0	0	0	0	0	0	0	0	0	0	0	0	0	0
	Purple	1	1	1	1	1	1	1	1	0	0	0	0	0	0	0	0	1	1	1	1	1	1	1	1
	Yellow	1	1	1	1	1	1	1	1	1	1	1	1	1	1	1	1	0	0	0	0	0	0	0	0
	White	1	1	1	1	1	1	1	1	1	1	1	1	1	1	1	1	1	1	1	1	1	1	1	1
Gray Scale of Red	Black	0	0	0	0	0	0	0	0	0	0	0	0	0	0	0	0	0	0	0	0	0	0	0	0
	△	1	0	0	0	0	0	0	0	0	0	0	0	0	0	0	0	0	0	0	0	0	0	0	0
	Darker	0	1	0	0	0	0	0	0	0	0	0	0	0	0	0	0	0	0	0	0	0	0	0	0
	△	↓								↓								↓							
	▽	↓								↓								↓							
	Brighter	1	0	1	1	1	1	1	1	0	0	0	0	0	0	0	0	0	0	0	0	0	0	0	0
	▽	↓								0	0	0	0	0	0	0	0	0	0	0	0	0	0	0	0
	Red	1	1	1	1	1	1	1	1	0	0	0	0	0	0	0	0	0	0	0	0	0	0	0	0
Gray Scale of Green	Black	0	0	0	0	0	0	0	0	0	0	0	0	0	0	0	0	0	0	0	0	0	0	0	0
	△	0	0	0	0	0	0	0	0	1	0	0	0	0	0	0	0	0	0	0	0	0	0	0	0
	Darker	0	0	0	0	0	0	0	0	0	1	0	0	0	0	0	0	0	0	0	0	0	0	0	0
	△	↓								↓								↓							
	▽	↓								↓								↓							
	Brighter	0	0	0	0	0	0	0	0	1	0	1	1	1	1	1	1	0	0	0	0	0	0	0	0
	▽	0	0	0	0	0	0	0	0	↓								0	0	0	0	0	0	0	0
	Green	0	0	0	0	0	0	0	0	1	1	1	1	1	1	1	1	0	0	0	0	0	0	0	0
Gray Scale of Blue	Black	0	0	0	0	0	0	0	0	0	0	0	0	0	0	0	0	0	0	0	0	0	0	0	0
	△	0	0	0	0	0	0	0	0	0	0	0	0	0	0	0	0	1	0	0	0	0	0	0	0
	Darker	0	0	0	0	0	0	0	0	0	0	0	0	0	0	0	0	0	1	0	0	0	0	0	0
	△	↓								↓								↓							
	▽	↓								↓								↓							
	Brighter	0	0	0	0	0	0	0	0	0	0	0	0	0	0	0	0	1	0	1	1	1	1	1	1
	▽	0	0	0	0	0	0	0	0	0	0	0	0	0	0	0	0	↓							
	Blue	0	0	0	0	0	0	0	0	0	0	0	0	0	0	0	0	1	1	1	1	1	1	1	1
Gray Scale of White & Black	Black	0	0	0	0	0	0	0	0	0	0	0	0	0	0	0	0	0	0	0	0	0	0	0	0
	△	1	0	0	0	0	0	0	0	1	0	0	0	0	0	0	0	1	0	0	0	0	0	0	0
	Darker	0	1	0	0	0	0	0	0	0	1	0	0	0	0	0	0	0	1	0	0	0	0	0	0
	△	↓								↓								↓							
	▽	↓								↓								↓							
	Brighter	1	0	1	1	1	1	1	1	1	0	1	1	1	1	1	1	1	0	1	1	1	1	1	1
	▽	↓								↓								↓							
	White	1	1	1	1	1	1	1	1	1	1	1	1	1	1	1	1	1	1	1	1	1	1	1	1

6.0 INTERFACE SPECIFICATION

6.1 SPI Interface

6.1.1 Data RAM Write for SPI (9 bit 3 Wire)

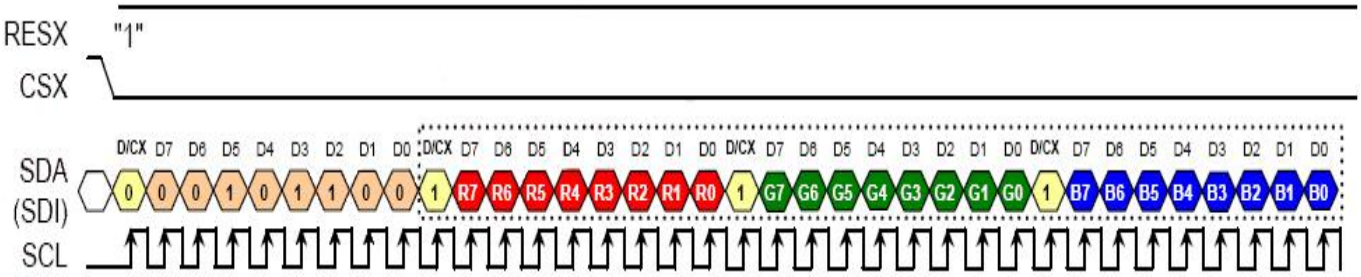

Start-bit (D/CX) is used as an "ID" for distinction of command and parameter

D/CX	Distinction
0	Command
1	Parameter

6.1.2 Data transmission through SPI

<1 byte Read Mode>

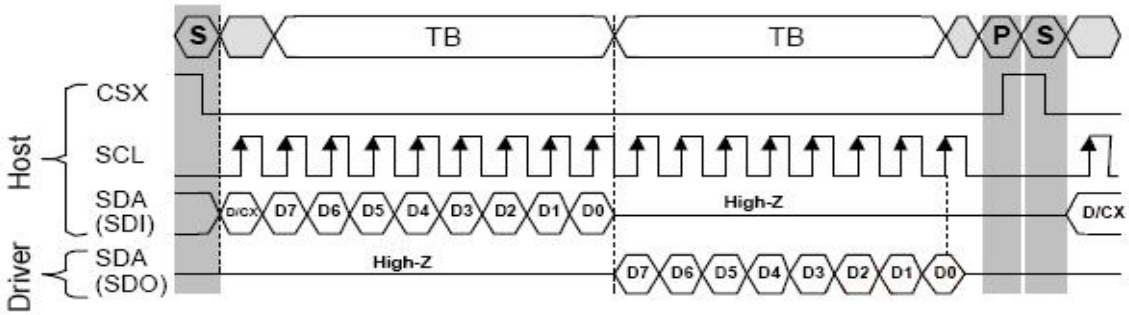

<Multi byte Read Mode>

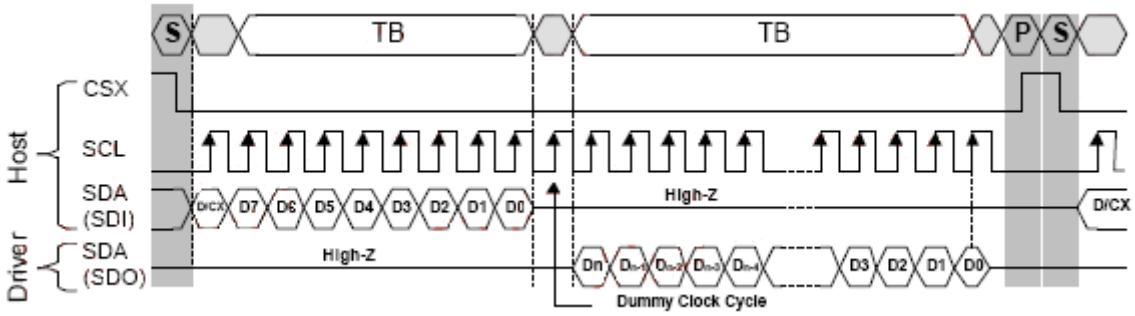

6.1.3 SPI interface timing characteristics (IOVCC = 1.65 ~ 3.3V)

- AC Timing Characteristics Diagram

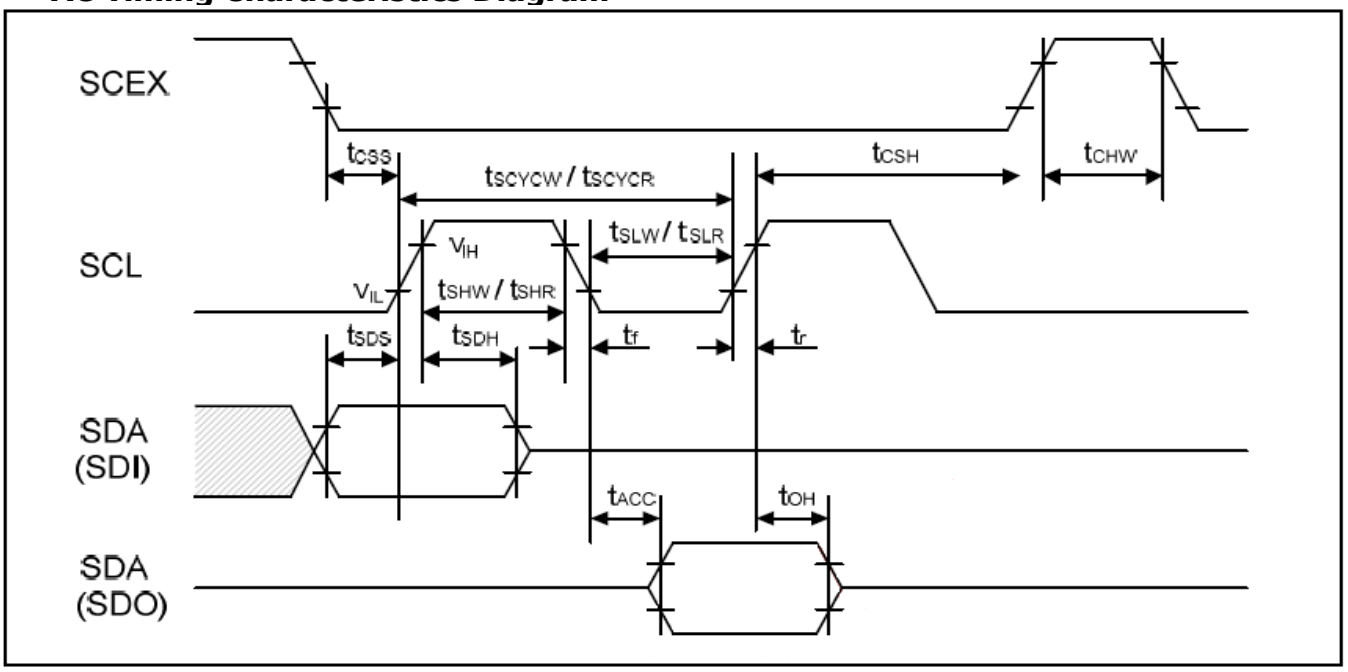

- AC Timing Characteristics Table

Signal	Symbol	Parameter	MIN	MAX	Unit	Description
SCL	tSCYCW	Serial clock cycle (Write)	100	-	ns	
	tSHW	SCL "H" pulse width (Write)	30	-	ns	
	tSLW	SCL "L" pulse width (Write)	30	-	ns	
	tSCYCR	Serial clock cycle (Read GRAM)	150	-	ns	
	tSHR	SCL "H" pulse width (Read GRAM)	60	-	ns	
	tSLR	SCL "L" pulse width (Read GRAM)	60	-	ns	
	tSCYCR	Serial clock cycle (Read ID)	150	-	ns	
	tSHR	SCL "H" pulse width (Read ID)	60	-	ns	
	tSLR	SCL "L" pulse width (Read ID)	60	-	ns	
SDI (SDO)	tSDS	Data setup time	20	-	ns	
	tSDH	Data hold time	20	-	ns	
	tACC	Access time	10	50	ns	For maximum CL=30pF
	tOH	Output disable time	15	50	ns	For minimum CL=8pF
CSX	tCHW	Chip select "H" pulse width	40	-	ns	
	tCSS	Chip select setup time	20	-	ns	
	tCSH	Chip select hold time	50	-	ns	

6.2 RGB Interface

6.2.1 Data format

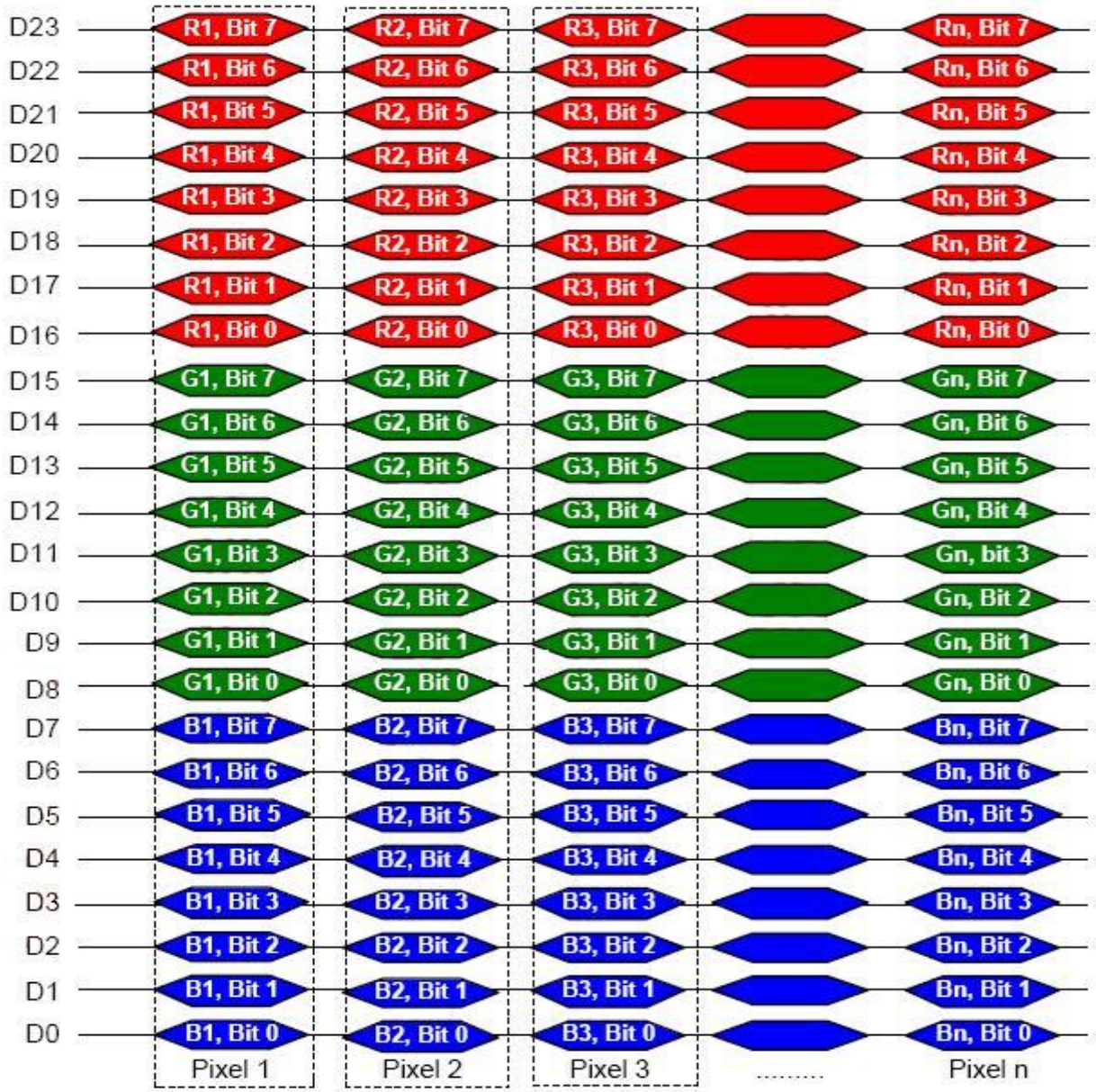

6.2.2 RGB Interface timing

<DE Mode>

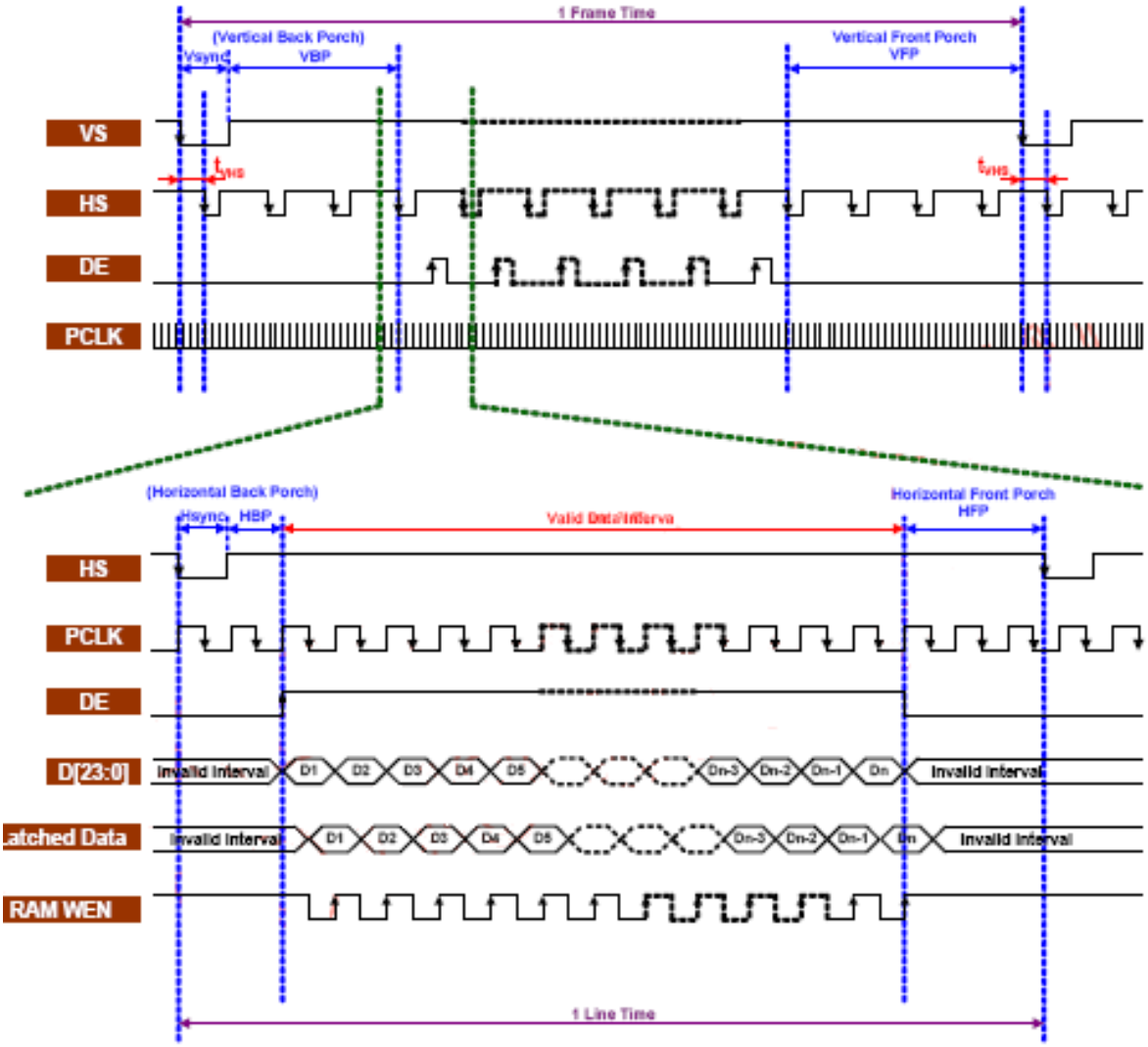

Notes

1. Constraint:

V-Back Porch (VBP [7:0] ≥ 5 HS lines, V-Front (VFP[7:0] ≥ 2 HS lines

VBP[7:0]+VFP[7:0] (porch of RGB signal) >VBPA/B/C [7:0] (internal display back porch)

H-Back Porch (HBP[7:0] ≥ 5 PCLK clocks, H-Front Porch (HFP[7:0] ≥ 2 PCLK clocks

2. t_{VHS} ≥ 400ns

<Sync Mode>

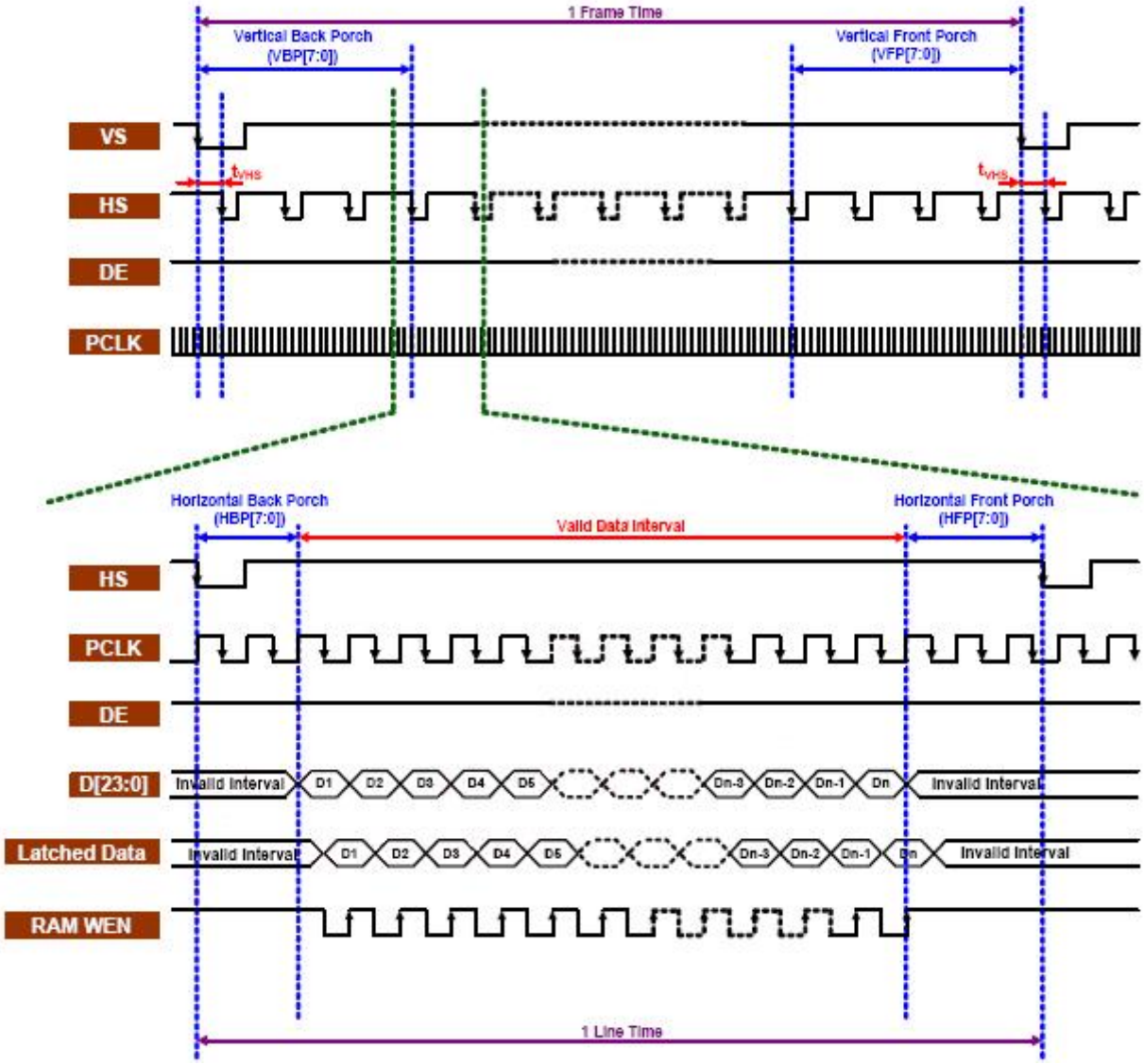

Notes

1. Constraint:

V-Back Porch (VBP [7:0] ≥ 5 HS lines, V-Front (VFP[7:0] ≥ 2 HS lines

VBP[7:0]+VFP[7:0] (porch of RGB signal) >VBPA/B/C [7:0] (internal display back porch)

H-Back Porch (HBP[7:0] ≥ 5 PCLK clocks, H-Front Porch (HFP[7:0] ≥ 2 PCLK clocks

2. t_{VHS} ≥ 400ns

6.2.3 RGB interface timing characteristics (IOVCC = 1.65 ~ 3.3V, VCI = 2.3~4.8V)

- AC Timing Characteristics Diagram

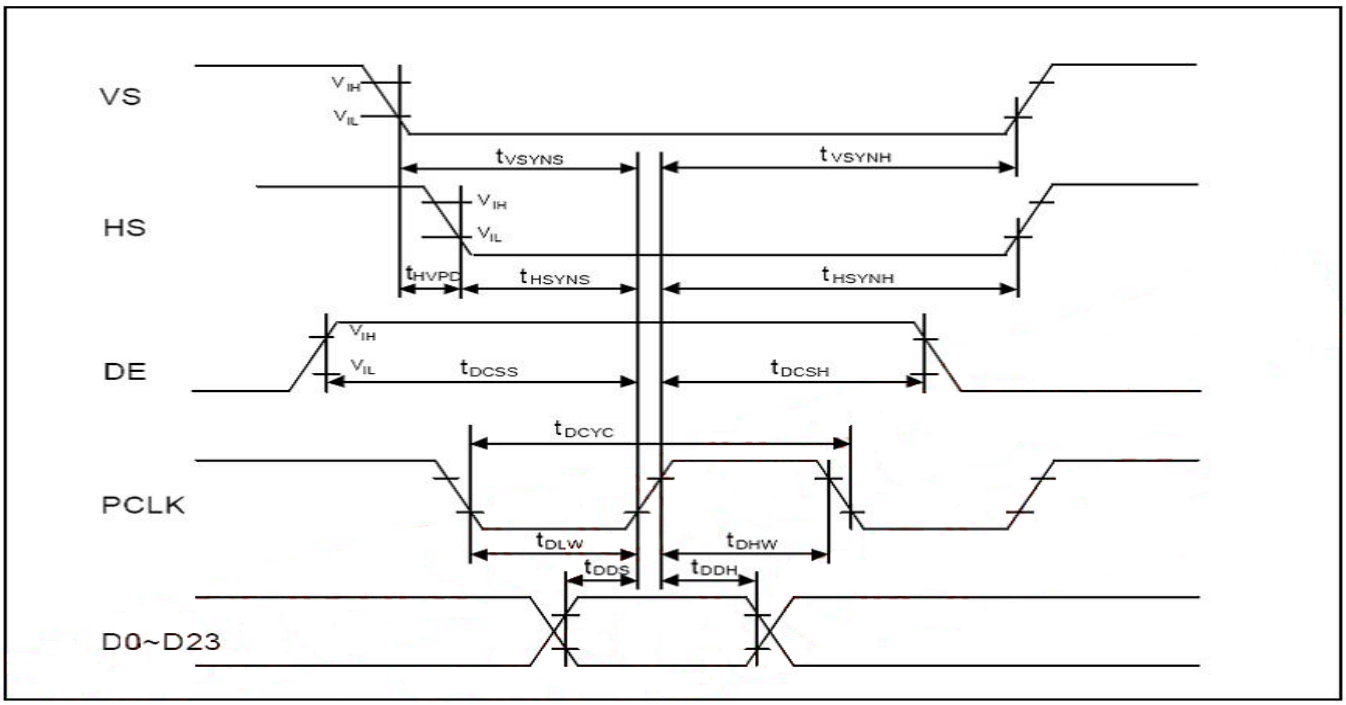

- AC Timing Characteristics Table

Signal	Symbol	Parameter	MIN	TYP	MAX	Unit	Description
VS	tVSYNS	VSYNC setup time	10	-	-	ns	
	tVSYNH	VSYNC hold time	10	-	-	ns	
HS	tHSYNS	HSYNC setup time	10	-	-	ns	
	tSCYCR	HSYNC hold time	10	-	-	ns	
	tHVPD	HSYNC to VSYNC falling edge	0	-	-	ns	
PCLK	tDCYC	PCLK cycle time	33	-	125	ns	
	tDLW	PCLK "L" pulse width	11	-	-	ns	
	tDHW	PCLK "H" pulse width	11	-	-	ns	
	fDFREQ	PCLK frequency	8	-	30	MHz	
DE	tDCSS	DE setup time	10	-	-	ns	
	tDCSH	DE hold Time	10	-	-	ns	
D0~D23	tDDS	RGB Data setup time	10	-	-	ns	
	tDDH	RGB Data hold time	10	-	-	ns	

7.0 REGISTER RESET CONDITION

If the RESET input becomes L or the reset command in input, the each register to its default value. These default values are listed in the table below.

Register		Default	Remark	
No Operation	0000h	-	Command Only	User command Set
Software Reset	0100h	-		
Read Display ID	0400h	0000h	Read Only	
		0080h		
		0000h		
Read No. of the Errors on DSI only	0500h	0000h		
Read Display Power Mode	0A00h	0008h		
Read Display MADCTL	0B00h	0000h		
Read Display Pixel Format	0C00h	0007h		
Read Display Image Mode	0D00h	0000h		
Read Display Signal Mode	0E00h	0000h		
Read Display Self-Diagnostic Result	0F00h	0000h		
Sleep In	1000h	-	Command Only / Display Control	
Sleep Out	1100h	-		
Partial Display Mode On	1200h	-		
Normal Display Mode On	1300h	-		
Display Inversion Off	2000h	-		
Display Inversion On	2100h	-		
All Pixel Off	2200h	-		
All Pixel On	2300h	-		
Gamma Set	2600h	0001h		
Display Off	2800h	-		
Display Off	2900h	-		
Column Address Set	2A00h	0000h	Display Control	
		0000h		
		0001h		

(continued)

Register		Default	Remark	
		00DFh	Display Control	User command Set
Row Address Set	2B00h	0000h		
		0000h		
		0003h		
		001Fh		
Partial Area	3000h	0000h		
		0000h		
		0003h		
		001Fh		
Tearing Effect Line Off	3400h	-		
Tearing Effect Line On	3500h	-		
Memory Data Access Control	3600h	0000h		
Idle Mode Off	3800h	-		
Idle Mode On	3900h	-		
Interface Pixel Format	3A00h	0077h	Interface Control / Display Control	
Set Tearing Effect Scan Line	4400h	0000h		
		0000h		
Get Scan Line	4500h	xxxxh		
		xxxxh		
Display Clock in RGB Interface	4A00h	0000h		
Deep Standby Mode On	4F00h	0000h		
Write Profile Value for Display	5000h	00FFh		
		00FFh		
		00FFh		
		00FFh		
		00FFh		
		00FFh		

(continued)

Register		Default	Remark	
		00FFh	Interface Control / Display Control	
		00FFh		
		00FFh		
		00FFh		
		00FFh		
		00FFh		
		00FFh		
		00FFh		
		00FFh		
		00FFh		
Write Display Brightness	5100h	0000h	Back Light Control	
Read Display Brightness	5200h	0000h		
Write CTRL Display	5300h	0000h		
Read CTRL Display Value	5400h	0000h		
Write Content Adaptive Brightness	5500h	0000h		
Read Content Adaptive Brightness	5600h	0000h		
Write Hysteresis	5700h	00FFh		
		00FFh		
		00FFh		
		:		
		:		
		:		
		00FFh		
		00FFh		

(continued)

Register		Default	Remark	
Write Gamma Setting	5800h	0001h		
		0001h		
		0001h		
		0001h		
		0001h		
		0001h		
		0001h		
Read FS Value MSBs	5A00h	0000h		
Read FS Value LSBs	5B00h	0000h		
Read Median Filter FS Value MSBs	5C00h	0000h		
Read Median Filter FS Value LSBs	5D00h	0000h		
Write CABC minimum brightness	5E00h	0000h		
Read CABC minimum brightness	5F00h	0000h		
Write Light Sensor Compensation Coefficient Value	6500h	0080h		
		0080h		
Read Light Sensor Compensation Coefficient Value MSBs	6600h	0080h		
Read Light Sensor Compensation Coefficient Value LSBs	6700h	0000h		
Read Black/White Low Bits	7000h	0000h	Color Control	
Read Bkx	7100h	0000h		
Read Bky	7200h	0000h		
Read Wx	7300h	0000h		
Read Wy	7400h	0000h		
Read Red/Green Low Bits	7500h	0000h		
Read Rx	7600h	0000h		
Read Ry	7700h	0000h		
Read Gx	7800h	0000h		

(continued)

Register		Default	Remark	
Read Gy	7900h	0000h		
Read Blue/AColor Low Bits	7A00h	0000h		
Read Bx	7B00h	0000h		
Read By	7C00h	0000h		
Read Ax	7D00h	0000h		
Read Ay	7E00h	0000h		
Read DDB Start	A100h	0000h		
		0000h		
		0000h		
		0000h		
Read DDB Continue	A800h	0000h		
		0000h		
		0000h		
		0000h		
Read First Checksum	AA00h	0000h	User Command Check	
Read Continue Checksum	AF00h	0000h		
Read ID1 Value	DA00h	0000h	ID Check	
Read ID2 Value	DB00h	0080h		
Read ID3 Value	DC00h	0000h		

8.0 TFT-LCD DRIVER IC CONTROL ALGORITHMS

8.1 Initial Sequence of LCD (Power supply setting)

No.	Item	Function	Register	Parameter
1	RESET LCD Driver	nReset=1		
		DELAY 1ms		
		nReset=0		
		DELAY 1ms		
		nReset=1		
		DELAY 5ms		
2	Start Initial Sequence	TEST Commands	FF00h	00AAh
				0055h
				0025h
				0001h
		TEST Commands	F300h	0000h
				0032h
				0000h
				0038h
				0031h
				0008h
				0011h
				0000h
		Select Command Page "0"	F000h	0055h
				00AAh
				0052h
				0008h
				0000h
		RGB Interface Signals Control	B000h	0004h
				000Ah
				000Eh

(continued)

No.	Item	Function	Register	Parameter
				0009h
				0004h
		Display Option Control	B100h	00CCh
				0004h
		Memory data access control	3600h	0002h
		Display Clock in RGB Interface	B300h	0000h
		Source Output Data Hold Time Control	B600h	0003h
		EQ Control Function for Gate Signals	B700h	0070h
				0070h
		EQ Control Function for Source Driver	B800h	0000h
				0006h
				0006h
				0006h
		Inversion Driving Control	BC00h	0000h
				0000h
				0000h
		Display Timing Control	BD00h	0001h
				0084h
				0006h
				0050h
				0000h
		Display Timing Control (Gateless)	CC00h	0003h
				002Ah
				0006h
3	Power Control	Select Command Page "1"	F000h	0055h
				00AAh
				0052h

(continued)

No.	Item	Function	Register	Parameter
				0008h
				0001h
		Setting AVDD Voltage	B000h	0005h
				0005h
				0005h
		Setting AVEE Voltage	B100h	0005h
				0005h
				0005h
		VCL Setting for LVGL	B200h	0003h
				0003h
				0003h
		Power Control for VCL	B800h	0024h
				0024h
				0024h
		Setting VGH Voltage	B300h	000Ah
				000Ah
				000Ah
		Power Control for VGH	B900h	0024h
				0024h
				0024h
		VGH Output Voltage	BF00h	0001h
		Setting VGL_REG Voltage	B500h	0008h
				0008h
				0008h

(continued)

No.	Item	Function	Register	Parameter
		Setting VRGH Voltage	B400h	002Dh
				002Dh
				002Dh
		Setting VGMP and VGSP Voltage	BC00h	0000h
				0068h
				0000h
		Setting VGMN and VGSN Voltage	BD00h	0000h
				007Ch
				0000h
		Setting VCOM Offset Voltage	BE00h	0000h
				0060h
		TEST Commands (PWM)	CE00h	0000h
				0000h
				0000h
				0000h
				0000h
				0000h
				0000h
4	Gradient Control	Gradient Control for Gamma Voltage	D000h	0009h
				000Fh
				0006h
				0008h
5	Gamma Control	Positive Gamma for RED	D100h	0000h
				0037h
				0000h
				0061h
				0000h
				0092h

(continued)

No.	Item	Function	Register	Parameter
				0000h
				00B4h
				0000h
				00BFh
				0001h
				0006h
				0001h
				0030h
				0001h
				0075h
				0001h
				0090h
				0001h
				00C8h
				0001h
				00F8h
				0002h
				0033h
				0002h
				006Ch
				0002h
				006Eh
				0002h
				00A5h
				0002h
				00D1h
				0002h
				00FAh

(continued)

No.	Item	Function	Register	Parameter
				0003h
				0030h
				0003h
				0040h
				0003h
				005Eh
				0003h
				0077h
				0003h
				0094h
				0003h
				009Fh
				0003h
				00ACh
				0003h
				00BAh
				0003h
				00F1h
		Positive Gamma for GREEN	D200h	0000h
				0037h
				0000h
				0061h
				0000h
				0092h
				0000h
				00B4h
				0000h
				00BFh

(continued)

No.	Item	Function	Register	Parameter
				0001h
				0006h
				0001h
				0030h
				0001h
				0075h
				0001h
				0090h
				0001h
				00C8h
				0001h
				00F8h
				0002h
				0033h
				0002h
				006Ch
				0002h
				006Eh
				0002h
				00A5h
				0002h
				00D1h
				0002h
				00FAh
				0003h
				0030h
				0003h

(continued)

No.	Item	Function	Register	Parameter
				0040h
				0003h
				005Eh
				0003h
				0077h
				0003h
				0094h
				0003h
				009Fh
				0003h
				00ACh
				0003h
				00BAh
				0003h
				00F1h
		Positive Gamma for BLUE	D300h	0000h
				0037h
				0000h
				0061h
				0000h
				0092h
				0000h
				00B4h
				0000h
				00BFh
				0001h
				0006h

(continued)

No.	Item	Function	Register	Parameter
				0001h
				0030h
				0001h
				0075h
				0001h
				0090h
				0001h
				00C8h
				0001h
				00F8h
				0002h
				0033h
				0002h
				006Ch
				0002h
				006Eh
				0002h
				00A5h
				0002h
				00D1h
				0002h
				00FAh
				0003h
				0030h
				0003h
				0040h
				0003h

(continued)

No.	Item	Function	Register	Parameter
				005Eh
				0003h
				0077h
				0003h
				0094h
				0003h
				009Fh
				0003h
				00ACh
				0003h
				00BAh
				0003h
				00F1h
		Negative Gamma for RED	D400h	0000h
				0037h
				0000h
				0068h
				0000h
				00A0h
				0000h
				00EFh
				0001h
				001Ah
				0001h
				003Eh
				0001h
				004Eh

(continued)

No.	Item	Function	Register	Parameter
				0001h
				0060h
				0001h
				008Bh
				0001h
				00BEh
				0001h
				00E9h
				0002h
				0037h
				0002h
				006Ch
				0002h
				006Eh
				0002h
				00A8h
				0002h
				00E0h
				0002h
				00F7h
				0003h
				002Ah
				0003h
				002Dh
				0003h
				005Eh
				0003h

(continued)

No.	Item	Function	Register	Parameter
				0077h
				0003h
				0094h
				0003h
				009Fh
				0003h
				00ACh
				0003h
				00BAh
				0003h
				00F1h
		Negative Gamma for GREEN	D500h	0000h
				0037h
				0000h
				0068h
				0000h
				00A0h
				0000h
				00EFh
				0001h
				001Ah
				0001h
				003Eh
				0001h
				004Eh
				0001h
				0060h

(continued)

No.	Item	Function	Register	Parameter
				0001h
				008Bh
				0001h
				00BEh
				0001h
				00E9h
				0002h
				0037h
				0002h
				006Ch
				0002h
				006Eh
				0002h
				00A8h
				0002h
				00E0h
				0002h
				00F7h
				0003h
				002Ah
				0003h
				002Dh
				0003h
				005Eh
				0003h
				0077h
				0003h

(continued)

No.	Item	Function	Register	Parameter
				0094h
				0003h
				009Fh
				0003h
				00ACh
				0003h
				00BAh
				0003h
				00F1h
		Negative Gamma for BLUE	D600h	0000h
				0037h
				0000h
				0068h
				0000h
				00A0h
				0000h
				00EFh
				0001h
				001Ah
				0001h
				003Eh
				0001h
				004Eh
				0001h
				0060h
				0001h
				008Bh

(continued)

No.	Item	Function	Register	Parameter
				0001h
				00BEh
				0001h
				00F9h
				0002h
				0037h
				0002h
				006Ch
				0002h
				006Eh
				0002h
				00A8h
				0002h
				00E0h
				0002h
				00F7h
				0003h
				002Ah
				0003h
				002Dh
				0003h
				005Eh
				0003h
				0077h
				0003h
				0094h
				0003h

(continued)

No.	Item	Function	Register	Parameter
				009Fh
				0003h
				00ACh
				0003h
				00BAh
				0003h
				00F1h
6	Display On	Sleep out	1100h	-
		DELAY 120ms		
		Backlight (Write Brightness)	5100h	00FFh
		Backlight (Control ambient light)	5300h	002Ch
		Display On	2900h	-

8.2 Power On/Off Sequence of LCD

< Power ON Sequence >

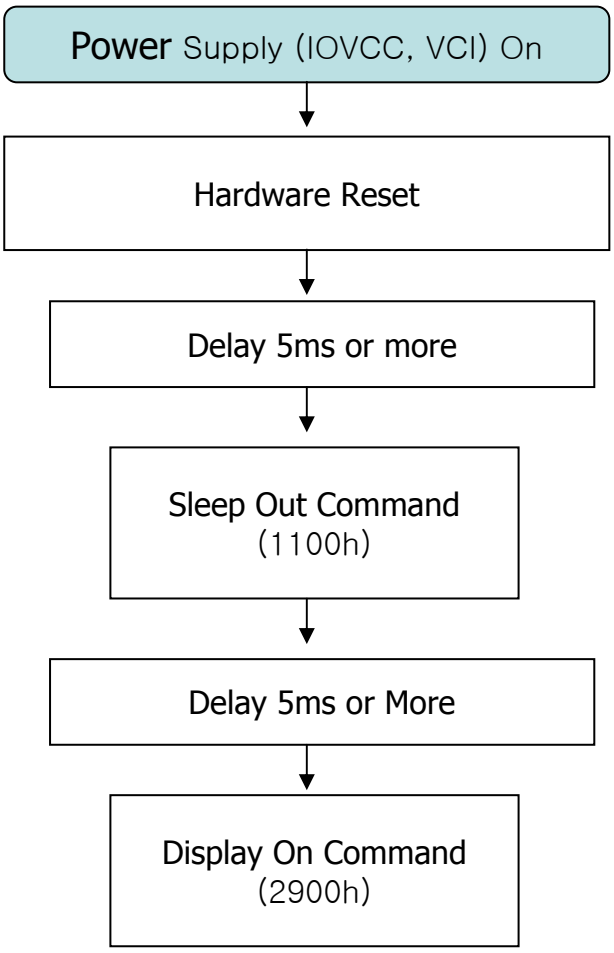

< Power OFF Sequence >

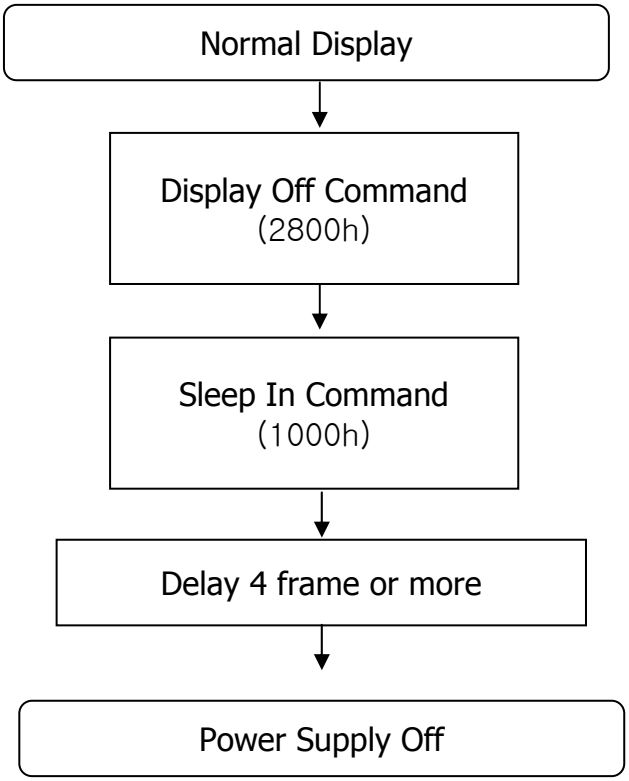

8.3 Display On/Off Sequence of LCD

< Display ON Sequence >

Power Supply (IOVCC, VCI) On

↓

Delay 1ms or more

↓

Power On Reset

↓

Delay 10ms or more

↓

- INVOFF/ON Setting (Display inversion/Normal Set)
- PTLAR/PTLON/NORON
  (Partial Area Set & Partial On / Normal On Set)
  .PSL/PEL (Partial Start/End Lines Set)
- MADCTL (Memory Data Access Control)
  .Row & Column Direction, Row/Column Exchange
  .Vertical Refresh Order, Stripe/Square RGB
  .Horizontal Refresh Order
- COLMOD (Interface Pixel Format Set)
- RASET/CASET (Row/Column Address Set)
- RAMWR (Memory Data Write)
- Power Control Setting
- Gamma Setting

↓

SLEEP Out (1100h)

↓

Delay 120ms or more

↓

Display ON (2900h)

< Display OFF Sequence >

SLEEP In (1000h)

↓

Delay 3Frames or more

↓

Display OFF (2800h)

8.4 Sleep and Deep Standby mode LCD

< Sleep >

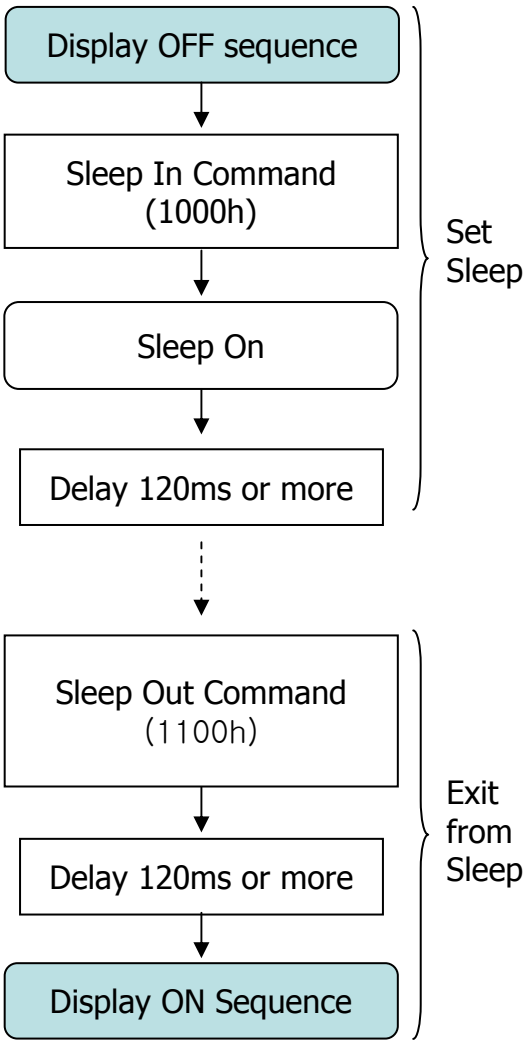

< Deep Standby >

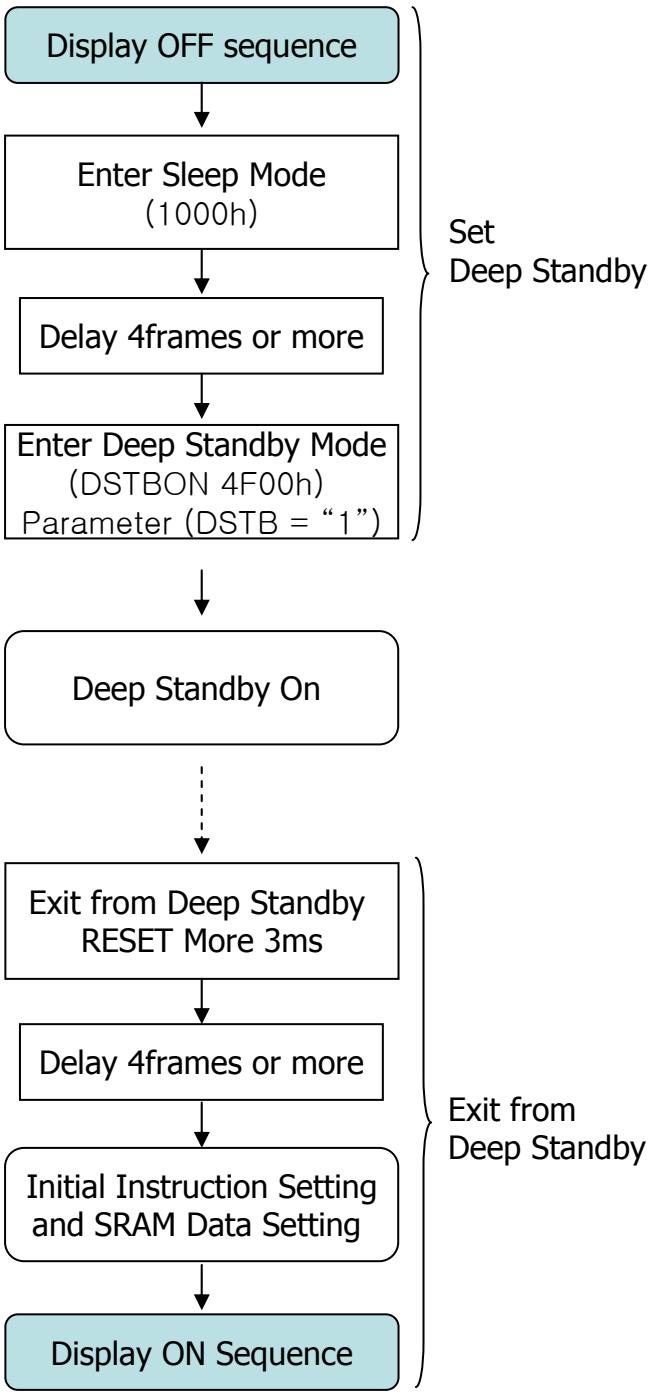

9.0 MECHANICAL CHARACTERISTICS

9.1 Dimensional Requirements

Figure 5 (located in Appendix) shows mechanical outlines for the model 4.19" (106.4mm) WVGA aRD Other parameters are shown in Table 10.

<Table 10. Dimensional Parameters Specification >

Parameter	Specification	Unit
Dimensional outline	59.12±0.1(H)×100.15±0.1(V)×1.8±0.1 (T)	mm
Weight	25.5g (typ) / 28g (max.)	gram
Active area	54.72(H) × 91.20(V)	mm
Pixel pitch	0.114(H) × 0.114(V)	mm
Number of pixels	480(H) × 800(V) (1 pixel = R + G + B dots)	pixels
Back-light	8-LEDs serial type	

9.2 Clearness and Polarizer Hardness.

The surface of the LCD has an clear film to increase visibility and a hard coating to reduce scratching.

9.3 Light Leakage

There shall not be visible light from the back-lighting system around the edges of the screen as seen from a distance 50cm from the screen with an overhead light level of 350 [lux.]

10.0 RELIABLITY TEST

The Reliability test items and its conditions are shown in below.

<Table 12. Reliability Test Conditions >

No	Test Item	Conditions
1	High temperature operation test	Ta = 60 °C, 24 hrs
2	Low temperature operation test	Ta = -20 °C, 24 hrs
3	High temperature & high humidity operation test	Ta = 60 ℃, 90%RH, 96hrs
4	8585 test	Ta = 85 ℃, 85%RH, 120hrs (Pol. & BLU are not guaranteed.)
5	Thermal shock	Ta = -40 °C (1hr) ↔ 85 °C (1hr), 30 cycle
6	ALT	Ta = 65 ℃, 93%RH ~-10℃, 240hrs
7	Cold Bubble test	Ta = -20 °C, 48 hrs / 5 times dropping (height of 10cm) iron ball(5.4g, ϕ11.0)
8	LCM 3point bending test	Speed : 3mm/min, Measurement : the center of the LCM
9	Panel 3point bending test	Speed : 3mm/min, Measurement : the center of the Panel
10	Cell gap strength test	Speed : 5mm/min, Power : 70kgf, 2sec → No mura at white pattern
11	FOG tension strength test	Speed : 50mm/min, MIN 600gf/cm cpk 1↑ The shape of FPC : 1cm at the center, left, right of TFT PNL
12	Panel peel-off Strength test	Speed : 5mm/min, spec : min 2kgf , Push jig D=5mm
13	LDI 3point bending test	MIN B10 350Mpa
14	Electro-static discharge test (non-operating)	Air : 150pF, 330ohm, 8KV Contact : 150pF, 330ohm, 6KV 5times/4corner
15	GT mura test	Speed : 20mm/min Power : 5kgf, 2sec hold at white pattern → Disappearance within 10sec

11.0 LABELS

11.1 Product Marking Table

- Printed on back cover

1	2	3	4	5	6	7	8
X X	X	X	X X	X	X X	X	X X X X X X

No 1. Control Number

No 2. Grade

No 3. Supplier code

No 4. Year

No 5. Month (1, 2, 3, …, X, Y, Z)

No 6. Day

No 7. Revision code

No 8. Serial Number

11.2 Packing Label

1) Label Size : 108 mm (L) X 56 mm (W)
2) Contents
   - Model : HVA42WV1-M00
   - Q`ty : Module Q`ty in one box
   - Serial No. : Refer the description as below.
   - Date : Date of packing
   - FG Code : FG Code of Product
   - PO Type : E1(Domestic transaction vendor without Approval of Purchase)
     E2(Foreign vendor)
     E3(Domestic transaction vendor with Approval of Purchase)

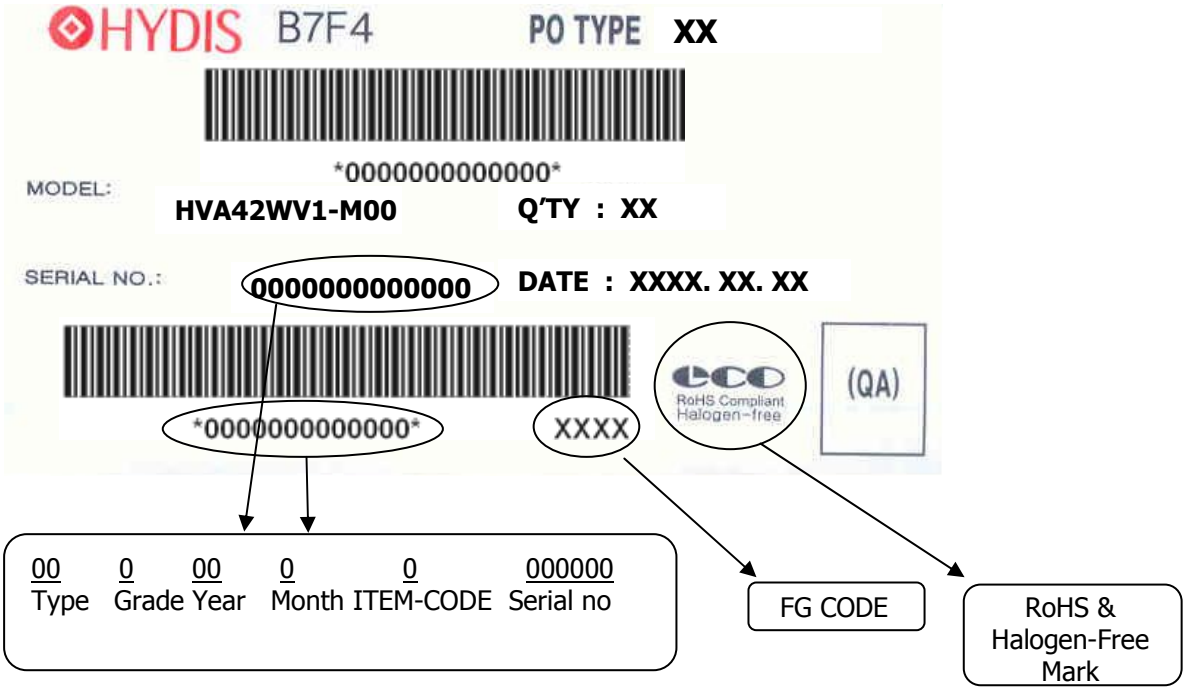

12.0 PACKING INFORMATION

HYDIS provides the standard shipping container for customers, unless customer specifies their packing information. The standard packing method and Barcode information are shown in below.

12.1 Packing Order

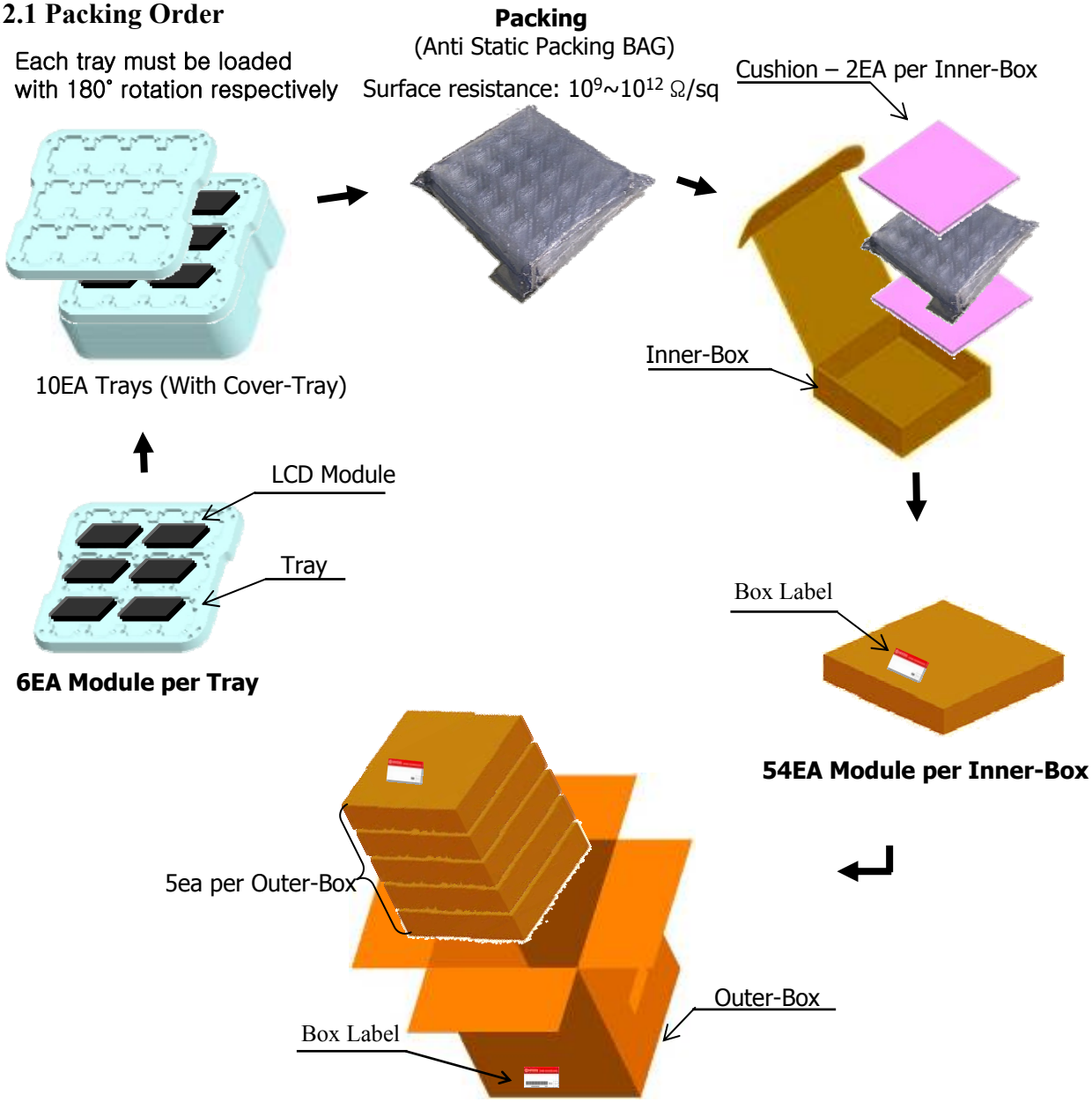

Notes : 1. Box Dimension: 333mm(W) X 333mm(D) X 435mm(H)
2. Package Quantity in one Box : 270pcs

12.2 Pallet Packing

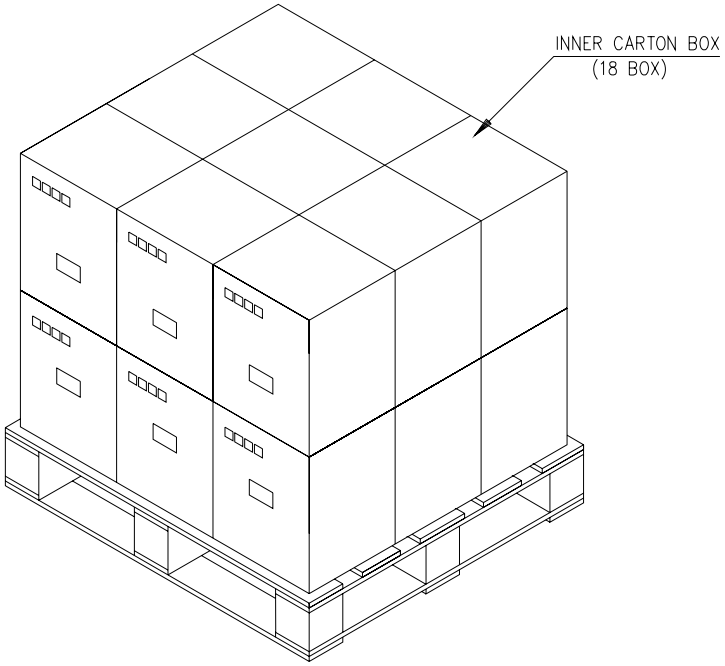

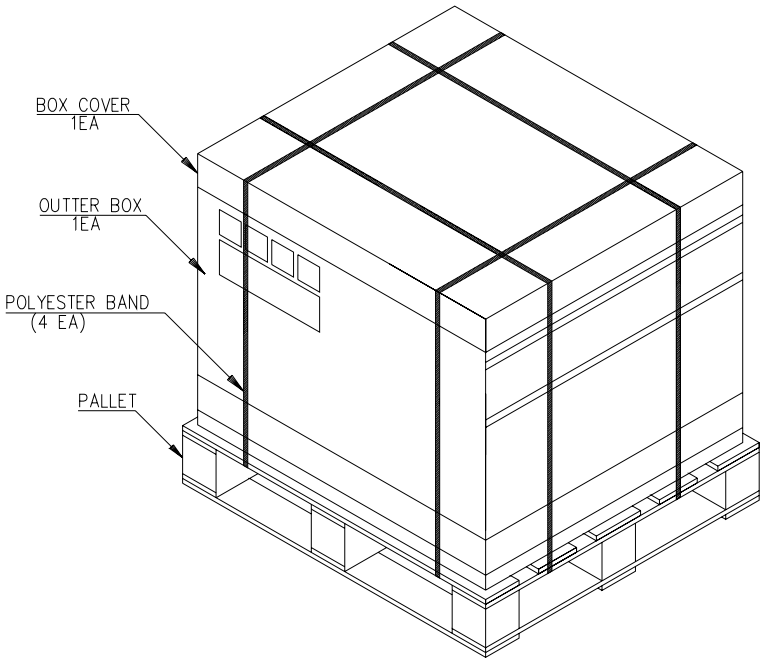

*** Note**

- Pallet Dimension : : 1100 mm (L) × 1100 mm (W) × 120 mm (H)
- Package Quantity in one Box : 270pcs
- Box Quantity in one Pallet : 18box

13.0 HANDLING & CAUTIONS

(1) Cautions when taking out the module

- Pick the pouch only, when taking out module from a shipping package.

(2) Cautions for handling the module

- As the electrostatic discharges may break the LCD module, handle the LCD module with care. Peel a protection sheet off from the LCD panel surface as slowly as possible.
- As the LCD panel and back - light element are made from fragile glass material, impulse and pressure to the LCD module should be avoided.
- As the surface of the polarizer is very soft and easily scratched, use a soft dry cloth without chemicals for cleaning.
- Do not pull the interface connector in or out while the LCD module is operating.
- Put the module display side down on a flat horizontal plane.
- Handle connectors and cables with care.

(3) Cautions for the operation

- When the module is operating, do not lose CLK, ENAB signals. If any one of these signals is lost, the LCD panel would be damaged.
- Obey the supply voltage sequence. If wrong sequence is applied, the module would be damaged.

(4) Cautions for the atmosphere

- Dew drop atmosphere should be avoided.
- Do not store and/or operate the LCD module in a high temperature and/or humidity atmosphere. Storage in an electro-conductive polymer packing pouch and under relatively low temperature atmosphere is recommended.

(5) Cautions for the module characteristics

- Do not apply fixed pattern data signal to the LCD module at product aging.
- Applying fixed pattern for a long time may cause image sticking.

(6) Other cautions

- Do not disassemble and/or re-assemble LCD module.
- Do not re-adjust variable resistor or switch etc.
- When returning the module for repair or etc., Please pack the module not to be broken. We recommend to use the original shipping packages

14.0 APPENDIX

Figure 1. Measurement Set Up

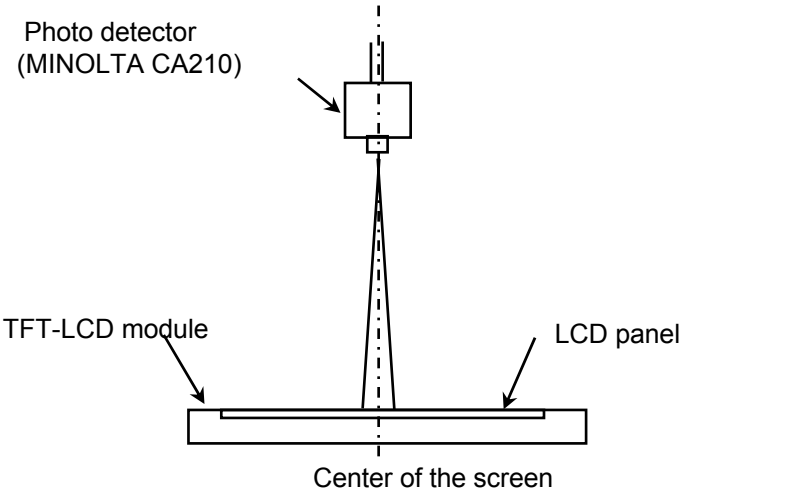

Optical characteristics measurement setup

Figure 2. White Luminance (Center point) and Uniformity Measurement Locations (9 points)

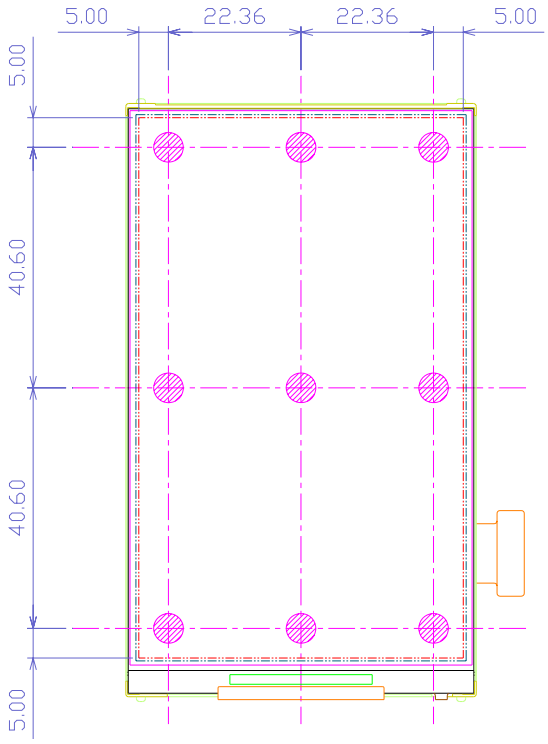

Figure 3. Response Time Testing

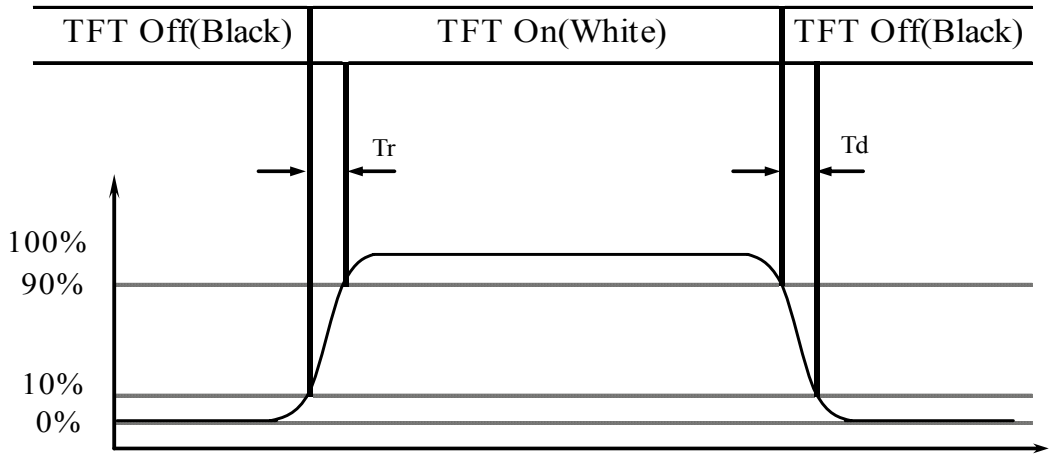

Figure 4. Cross Modulation Test Description

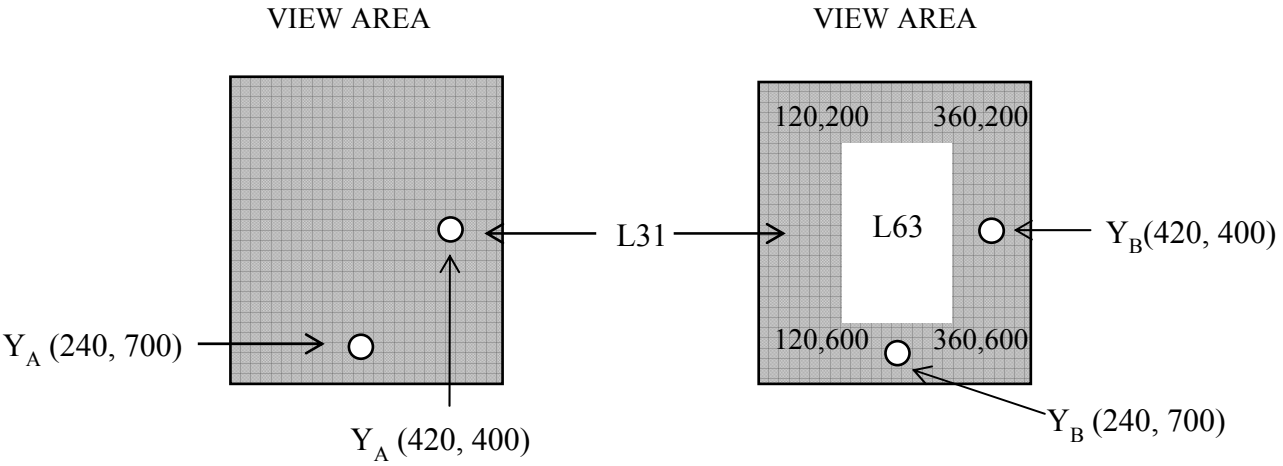

$$\text{Cross-Talk (\%)} = \left| \frac{Y_B - Y_A}{Y_B} \right| \times 100$$

Where:

Y_A = Initial luminance of measured area (cd/m^2)

Y_B = Subsequent luminance of measured area (cd/m^2)

The location measured will be exactly the same in both patterns

Figure 5. TFT-LCD Module Outline Dimension

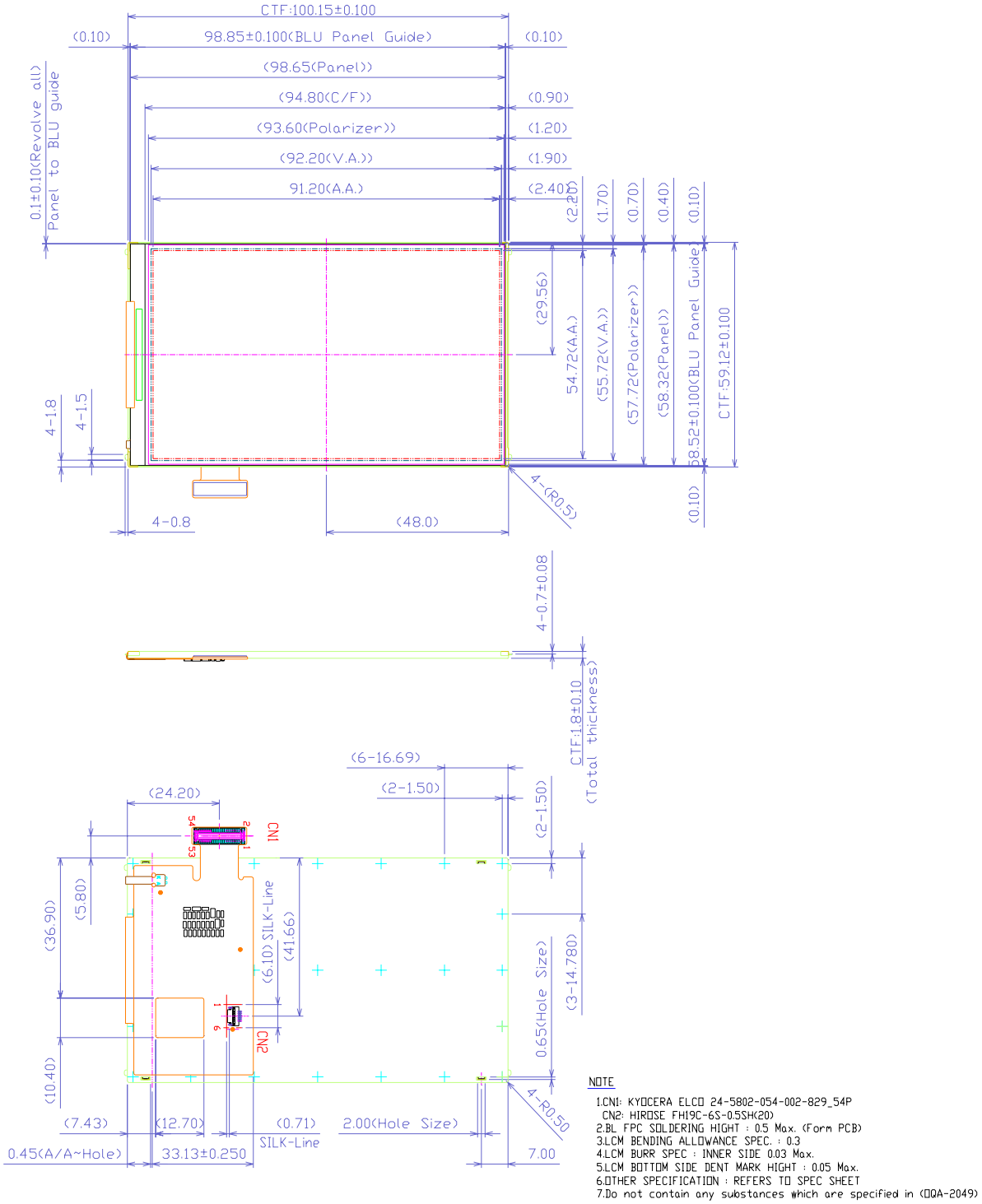
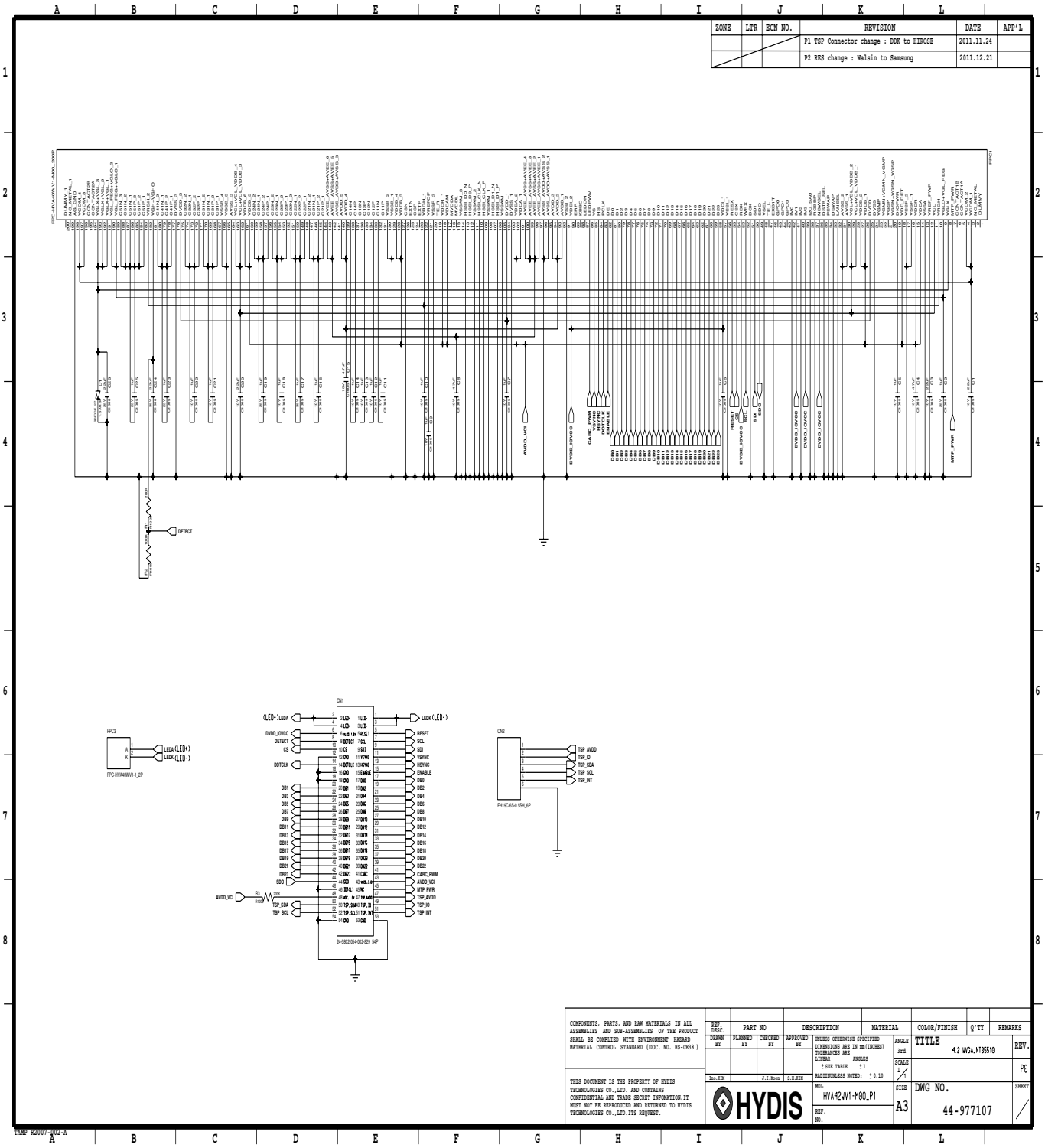
Figure 6. Circuit Diagram