PROPRIETARY NOTE
THIS SPECIFICATION IS THE PROPERTY OF HEI AND SHALL NOT BE REPRODUCED OR COPIED WITHOUT THE WRITTEN PERMISSION OF HEI AND MUST BE RETURNED TO HEI UPON ITS REQUEST.

TITLE: HT15X13-200 Product Specification

Rev. 0

LCD SBU
Hynix Semiconductor, Inc.

REVISION HISTORY

REV.	ECN NO.	DESCRIPTION OF CHANGES	DATE	PREPARED
0		Initial Release	01.05.25	J.Y JEONG

Contents

No.	Item	Page
1.0	General Description	4
2.0	Absolute Maximum Ratings	5
3.0	Electrical Specifications	6
4.0	Optical Specifications	7
5.0	Interface Connection	9
6.0	Signal Timing Specifications	11
7.0	Signal Timing Waveforms of interface signal (DE mode)	13
8.0	Input Signals, Display Colors & Gray Scale of Colors	14
9.0	Power Sequence	15
10.0	Mechanical Characteristics	16
11.0	Reliability Test	17
12.0	Handling & Cautions	18
13.0	Appendix	19

1.0 GENERAL DESCRIPTION

1.1 Introduction

HT15X13-200 is a color active matrix TFT LCD module using amorphous silicon TFT's (Thin Film Transistors) as an active switching devices. This module has a 15.0 inch diagonally measured active area with XGA resolutions (1024 horizontal by 768 vertical pixel array). Each pixel is divided into RED, GREEN, BLUE dots which are arranged in vertical stripe and this module can display 16,194,216 colors. The TFT-LCD panel used for this module is a low reflection and higher color type.

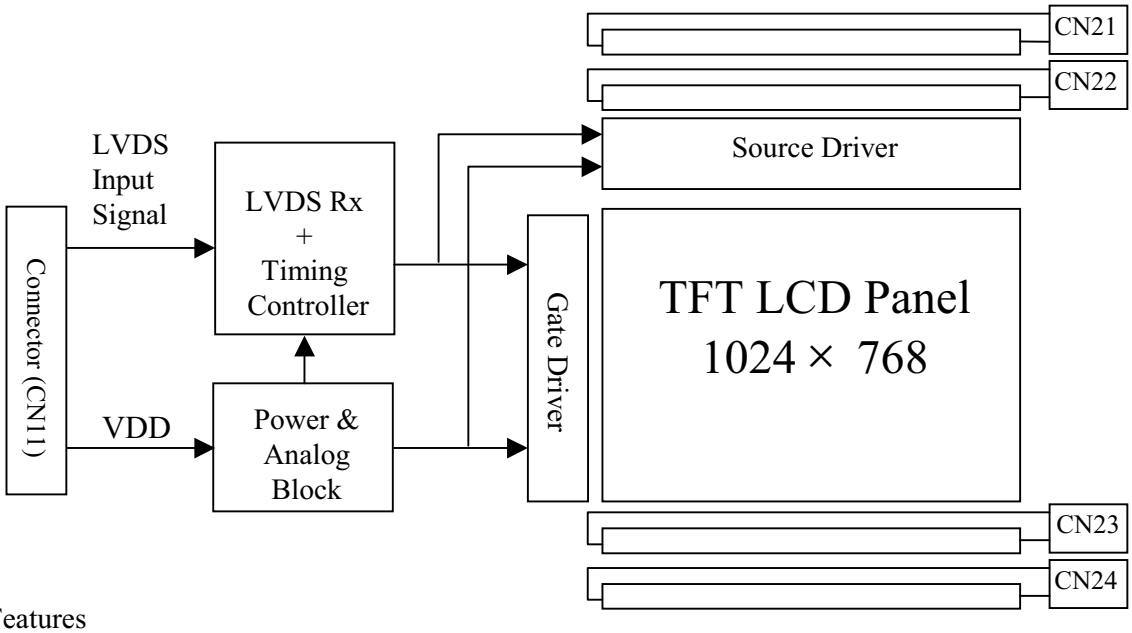

1.2 Features

- LVDS Interface with 1pixel / clock
- High-speed response
- 8-bit color depth, Display 16,194,277 colors
- Incorporated edge type back-light (Four lamps)
- High luminance and contrast ratio, low reflection and wide viewing angle
- DE (Data Enable) mode only

1.3 Applications

- Desktop type of PC use
- Display terminals for control system
- Monitors for process controller

1.4 General Specifications

Parameter	Specification	Unit	Remarks
Active area	304.128 (H) × 228.096(V)	mm	
Number of pixels	1024(H) × 768(V)	pixels	
Pixel pitch	0.297(H) × 0.297(V)	mm	
Pixel arrangement	RGB Vertical stripe		
Display colors	16,194,277	colors	
Display mode	Normally white		
Dimensional outline	331.6(H) × 254.7(V) × 12.7(D) typ.	mm	
Weight	1,250 max.	gram	
Back-light	Top/Bottom edge side 4-CCFL type		Note 1
Surface treatment	Haze 25, Anti-glare & hard-coating (3H)		

Note: 1. CCFL (Cold Cathode Fluorescent Lamp)

2.0 ABSOLUTE MAXIMUM RATINGS

The followings are maximum values which, if exceed, may cause faulty operation or damage to the unit.

[VSS = GND = 0V]

Parameter	Symbol	Min	Max	Unit	Remarks
Power Input Voltage	V_{DD}	VSS-0.3	4.0	V	Ta = 25℃
Logic Input Voltage	V_{IN}	VSS-0.3	V_{DD}+0.3	V	
Back-light Lamp Current	I_{BL}	3	7	mA	
Back-light lamp Frequency	F_L	40	80	KHz	
Operating Temperature (Humidity)	T_{OP} RH	0	+50 80	℃ %	≤ 40 ℃
Storage Temperature (Humidity)	T_{ST} RH	-20	+60 90	℃ %	≤ 40 ℃

3.0 ELECTRICAL SPECIFICATIONS

[Ta = 25±2℃]

Parameter		Min	Typ	Max	Unit	Remarks
Power Supply Voltage	V_{DD}	3.0	3.3	3.6	V	
Power Supply Current	I_{DD}	-	460	650	mA	Note1
Permissible Input Ripple Voltage	V_{RF}	-	-	100	mV	V_{DD} = 3.3V
High Level Differential Input Threshold Voltage	V_{IH}	-	-	+100	mV	Vcm = 1.2V typ.
Low Level Differential Input Threshold Voltage	V_{IL}	-100	-	-	mV	
Back-light Lamp Voltage	V_{BL}	-	560	-	V_{rms}	
Back-light Lamp Current	I_{BL}	3	5.5	7	mA_{rms}	
Back-light Lamp Frequency	F_L	40	-	80	KHz	Note 2
Lamp Start Voltage				950	V_{rms}	25℃, Note 3
				1150	V_{rms}	0℃ , Note 3
Lamp Life		40,000	50,000		hrs	I_{BL} = 5.5mA
Power Consumption	P_D		1.5		W	
	P_{BL}		12.5		W	I_{BL} = 5.5mA, Note 4
	P_{total}		14.0		W	

Notes:

1. The supply voltage is measured and specified at the interface connector of LCM.
   The current draw and power consumption specified is for VDD = 3.3V, Frame rate = 75Hz and Clock frequency = 78.75MHz.
   Test Pattern of power supply current
   a) Typ : Vertical color bar pattern
   b) Max : Vertical 2 Skip line pattern
2. The lamp frequency should be selected as different as possible from the horizontal synchronous frequency and its harmonics to avoid interference, which may cause line flow on the display
3. The voltage above this value should be applied to the lamps for more than 1 second to startup. Otherwise the lamps may not to be turned on.
4. Calculated value for reference ($V_{BL} \times I_{BL}$) × 4 excluding inverter loss.

4.0 OPTICAL SPECIFICATIONS

The measurement shall be executed after 30 minutes warm-up period.

Measuring equipment: TOPCON-BM5.

[VDD=3.3V, Frame rate=60Hz, Clock=65MHz, I_{BL} = 5.5mA, Ta = 25±2℃]

Parameter		Symbol	Condition	Min	Typ	Max	Unit	Remark
Viewing Angle	Horizontal	Θ_3	CR > 5	70	80	-	Deg	Note 1
		Θ_9		70	80	-	Deg	
	Vertical	Θ_{12}		40	45		Deg	
		Θ_6		70	80		Deg	
	Horizontal	Θ_3	CR > 10	60	65		Deg	
		Θ_9		60	65		Deg	
	Vertical	Θ_{12}		35	40	-	Deg	
		Θ_6		50	55	-	Deg	
Luminance contrast ratio		CR	$\Theta = 0°$ (Center) Normal Viewing Angle	250	300	-		Note 2
Luminance of white		Y_L		200	250	-	cd/m^2	Note 3
White luminance uniformity		ΔY		-	-	1.4		Note 4
Reproduction of color	White	x_W		0.288	0.318	0.348		Note 5
		y_W		0.300	0.330	0.360		
	Red	x_R		0.609	0.639	0.669		
		y_R		0.299	0.329	0.359		
	Green	x_G		0.273	0.303	0.333		
		y_G		0.553	0.583	0.613		
	Blue	x_B		0.113	0.143	0.173		
		y_B		0.070	0.100	0.130		
Response time (Rise + Decay)		Ttotal		-	20	25	msec	Note 6
Cross talk		CT		-	-	2.0	%	Note 7

Note:

1. Viewing angle is the angle at which the contrast ratio is greater than 5 or 10. The viewing are determined for the horizontal or 3, 9 o'clock direction and the vertical or 6, 12 o'clock direction with respect to the optical axis which is normal to the LCD surface (see FIGURE 1 shown in Appendix).

2. Contrast measurements shall be made at viewing angle of $\Theta = 0°$ and at the center of the LCD surface. Luminance shall be measured with all pixels in the view field set first to white, then to the dark (black) state. (See FIGURE 1 shown in Appendix) Luminance Contrast Ratio (CR) is defined mathematically.

$$CR = \frac{\text{Luminance when displaying a white raster}}{\text{Luminance when displaying a black raster}}$$

3. Average Luminance of white is defined as arithmetic mean of 5 measurement points, from 1 to 5, across the LCD surface. Luminance shall be measured with all pixels in the view field set first to white. This measurement shall be taken at the locations shown in FIGURE 2 for a total of the measurements per display.

4. The White luminance uniformity on LCD surface is then expressed as : ΔY = Maximum Luminance of 13 points / Minimum Luminance of 13 points (see FIGURE 2 shown in Appendix).

5. The color chromaticity coordinates specified in Table 4 shall be calculated from the spectral data measured with all pixels first in red, green, blue and white. Measurements shall be made at the center of the panel.

6. The electro-optical response time measurements shall be made as FIGURE 3 shown in Appendix by switching the "data" input signal ON and OFF. The times needed for the luminance to change from 10% to 90% is Td, and 90% to 10% is Tr.

7. Cross-Talk of one area of the LCD surface by another shall be measured by comparing the luminance (Y_A) of a 25mm diameter area, with all display pixels set to a gray level, to the luminance (Y_B) of that same area when any adjacent area is driven dark. (See FIGURE 4 shown in Appendix).

5.0 INTERFACE CONNECTION

5.1 Electrical Interface

CN1 Interface connector : DF14H-20P-1.25H (HIROSE)

User side connector : DF14-20S-1.25C (HIROSE) or equivalent

Pin No	Symbol	Function	Remark
1	VDD1	Power Supply: +3.3V	
2	VDD2	Power Supply: +3.3V	
3	VSS	Ground	
4	VSS	Ground	
5	RIN0-	LVDS Negative data signal (-)	Tx pin # 48
6	RIN0+	LVDS Positive data signal (+)	Tx pin # 47
7	VSS	Ground	
8	RIN1-	LVDS Negative data signal (-)	Tx pin # 46
9	RIN1+	LVDS Positive data signal (+)	Tx pin # 45
10	VSS	Ground	
11	RIN2-	LVDS Negative data signal (-)	Tx pin # 42
12	RIN2+	LVDS Positive data signal (+)	Tx pin # 41
13	VSS	Ground	
14	RCLKIN-	LVDS Negative clock signal (-)	Tx pin # 40
15	RCLKIN+	LVDS Positive clock signal (+)	Tx pin # 39
16	VSS	Ground	
17	RIN3-	LVDS Negative data signal (-)	Tx pin # 38
18	RIN3+	LVDS Positive data signal (+)	Tx pin # 37
19	VSS	Ground	
20	NC	Reserved	

5.2 LVDS Interface

LVDS Transmitter: THC63LVDM83A or equivalent.

Input signal	Transmitter		Interface		DF14H-20P-1.25H	Remark
	Pin No	Pin No	System (Tx)	TFT-LCD (Rx)	Pin No.	
R0	51	48 47	OUT0- OUT0+	IN0- IN0+	5 6	
R1	52					
R2	54					
R3	55					
R4	56					
R5	3					
G0	4					
G1	6	46 45	OUT1- OUT1+	IN1- IN1+	8 9	
G2	7					
G3	11					
G4	12					
G5	14					
B0	15					
B1	19					
B2	20	42 41	OUT2- OUT2+	IN2- IN2+	11 12	
B3	22					
B4	23					
B5	24					
HSYNC	27					
VSYNC	28					
DE	30					
MCLK	31	40 39	CLKOUT- CLKOUT+	CLKIN- CLKIN+	14 15	
R6	50	38 37	OUT3+ OUT3-	IN3- IN3+	17 18	
R7	2					
G6	8					
G7	10					
B6	16					
B7	18					
RSVD	25					

5.3 Back-light Interface

CN21, 22, 23, 24 Connector : BHR-02VS-1 (JST)

User side connector : SM02B-BHS-1 (JST) or equivalent

Pin No	INPUT	Color	Function
1	HOT	Pink & Cyan	High voltage
2	COLD	White & Black	Ground

5.4 Data Input Format

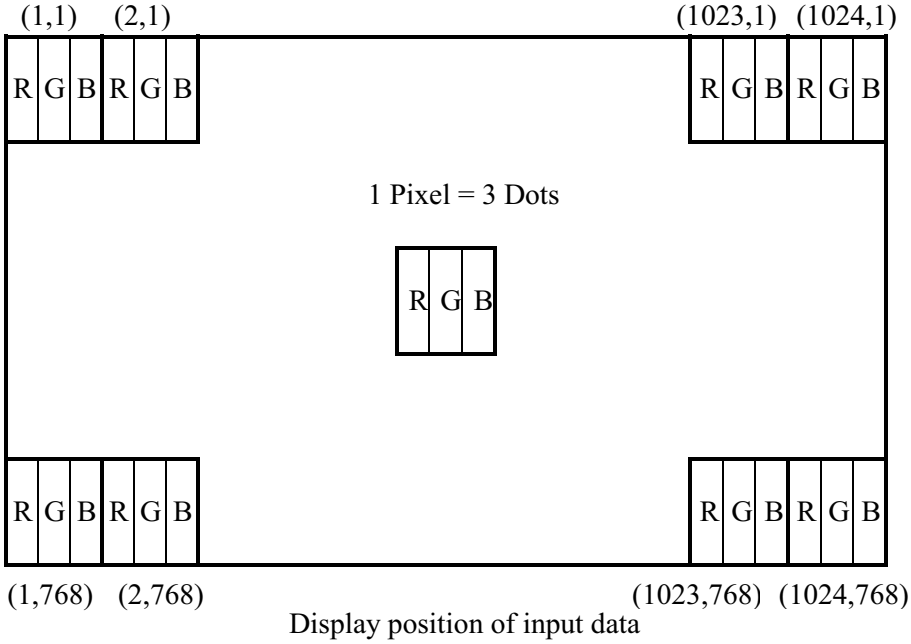

Display position of input data

6.0 SIGNAL TIMING SPECIFICATIONS

6.1 The HT15X13-200 is operated by the only DE (Data enable) mode (LVDS Transmitter Input)

Item		Symbols	Min	Typ	Max	Unit
Clock	Frequency	1/Tc	-	65	80	MHz
	High Time	Tch	4.5	-	-	ns
	Low Time	Tcl	4.5	-	-	ns
Data	Setup Time	Tds	2.7	-	-	ns
	Hold Time	Tdh	0	-	-	ns
Data Enable Setup Time		Tes	2.7	-	-	ns
Frame Period		Tv	772	806	1022	lines
Vertical Display Period		Tvd	768	768	768	lines
One Line Scanning Period		Th	1100	1344	2046	clocks
Horizontal Display Period		Thd	1024	1024	1024	clocks

6.2 LVDS Rx interface timing parameter

The specification of the LVDS Rx interface timing parameter

<LVDS Rx Interface Timing Specification>

Item	Symbol	Min	Typ	Max	Unit	Remark
CLKIN Period	tRCIP	12.5	15.38	-	nsec	
Input Data 0	tRIP1	-0.4	0.0	+0.4	nsec	
Input Data 1	tRIP0	1*tRICP/7-0.4	1*tRICP/7	1*tRICP/7+0.4	nsec	
Input Data 2	tRIP6	2*tRICP/7-0.4	2*tRICP/7	2*tRICP/7+0.4	nsec	
Input Data 3	tRIP5	3*tRICP/7-0.4	3*tRICP/7	3*tRICP/7+0.4	nsec	
Input Data 4	tRIP4	4*tRICP/7-0.4	4*tRICP/7	4*tRICP/7+0.4	nsec	
Input Data 5	tRIP3	5*tRICP/7-0.4	5*tRICP/7	5*tRICP/7+0.4	nsec	
Input Data 6	tRIP2	6*tRICP/7-0.4	6*tRICP/7	6*tRICP/7+0.4	nsec	

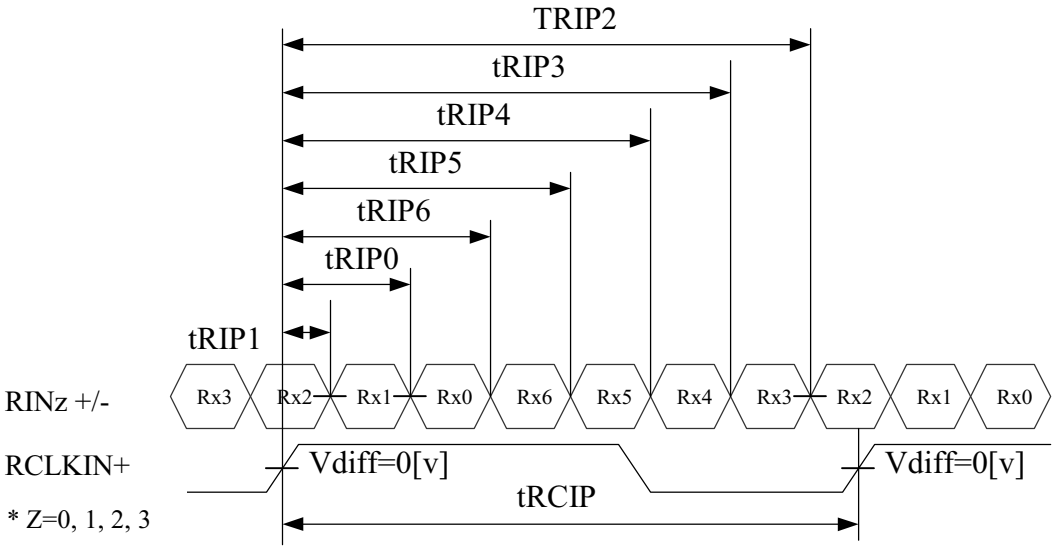

* Vdiff = (RINz+)-(RINz-), (RCLKIN+)-(RCLKIN-)

7.0 SIGNAL TIMING WAVEFORMS OF INTERFACE SIGNAL (DE MODE)

7.1 Vertical Timing Waveforms

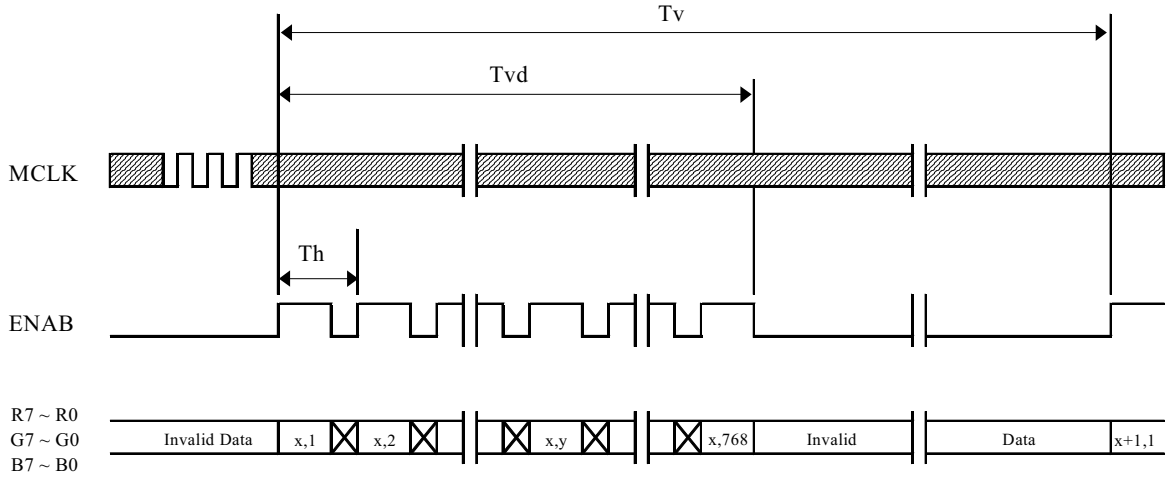

7.2 Horizontal Timing Waveforms

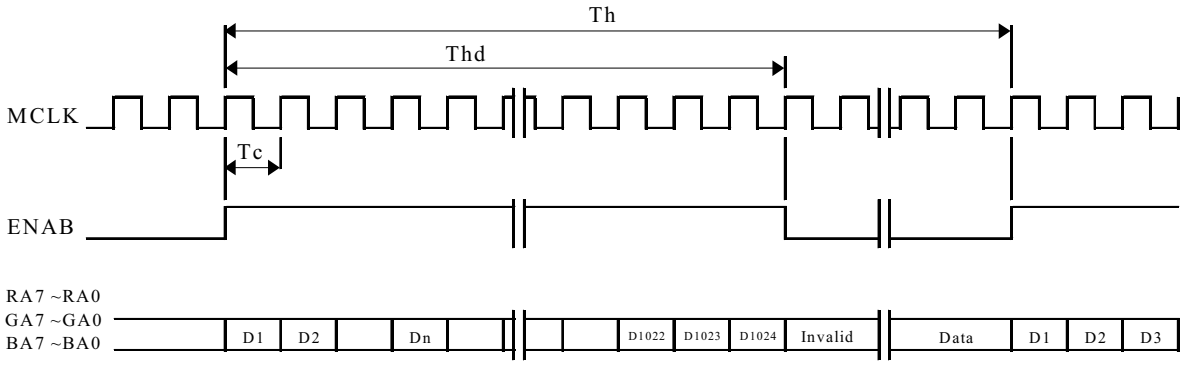

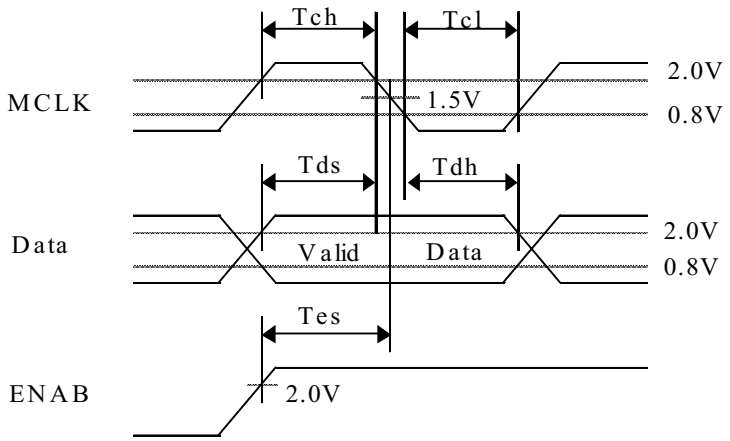

8.0 INPUT SIGNALS, BASIC DISPLAY COLORS & GRAY SCALE OF COLORS

Colors & Gray Scale		Red data								Green data								Blue data							
		R7	R6	R5	R4	R3	R2	R1	R0	G7	G6	G5	G4	G3	G2	G1	G0	B7	B6	B5	B4	B3	B2	B1	B0
Basic Colors	Black	0	0	0	0	0	0	0	0	0	0	0	0	0	0	0	0	0	0	0	0	0	0	0	0
	Blue	0	0	0	0	0	0	0	0	0	0	0	0	0	0	0	0	1	1	1	1	1	1	1	1
	Green	0	0	0	0	0	0	0	0	1	1	1	1	1	1	1	1	0	0	0	0	0	0	0	0
	Cyan	0	0	0	0	0	0	0	0	1	1	1	1	1	1	1	1	1	1	1	1	1	1	1	1
	Red	1	1	1	1	1	1	1	1	0	0	0	0	0	0	0	0	0	0	0	0	0	0	0	0
	Magenta	1	1	1	1	1	1	1	1	0	0	0	0	0	0	0	0	0	0	1	1	1	1	1	1
	Yellow	1	1	1	1	1	1	1	1	1	1	1	1	1	1	1	1	0	0	0	0	0	0	0	0
	White	1	1	1	1	1	1	1	1	1	1	1	1	1	1	1	1	1	1	1	1	1	1	1	1
Gray Scale Of Red	Black	0	0	0	0	0	0	0	0	0	0	0	0	0	0	0	0	0	0	0	0	0	0	0	0
	△	0	0	0	0	0	0	0	1	0	0	0	0	0	0	0	0	0	0	0	0	0	0	0	0
	Darker	0	0	0	0	0	0	1	0	0	0	0	0	0	0	0	0	0	0	0	0	0	0	0	0
	△	↓								↓								↓							
	▽	↓								↓								↓							
	Brighter	1	1	1	1	1	1	0	1	0	0	0	0	0	0	0	0	0	0	0	0	0	0	0	0
	▽	1	1	1	1	1	1	1	0	0	0	0	0	0	0	0	0	0	0	0	0	0	0	0	0
	Red	1	1	1	1	1	1	1	1	0	0	0	0	0	0	0	0	0	0	0	0	0	0	0	0
Gray Scale Of Green	Black	0	0	0	0	0	0	0	0	0	0	0	0	0	0	0	0	0	0	0	0	0	0	0	0
	△	0	0	0	0	0	0	0	0	0	0	0	0	0	0	0	1	0	0	0	0	0	0	0	0
	Darker	0	0	0	0	0	0	0	0	0	0	0	0	0	0	1	0	0	0	0	0	0	0	0	0
	△	↓								↓								↓							
	▽	↓								↓								↓							
	Brighter	0	0	0	0	0	0	0	0	1	1	1	1	1	1	0	1	0	0	0	0	0	0	0	0
	▽	0	0	0	0	0	0	0	0	1	1	1	1	1	1	1	0	0	0	0	0	0	0	0	0
	Green	0	0	0	0	0	0	0	0	1	1	1	1	1	1	1	1	0	0	0	0	0	0	0	0
Gray Scale Of Blue	Black	0	0	0	0	0	0	0	0	0	0	0	0	0	0	0	0	0	0	0	0	0	0	0	0
	△	0	0	0	0	0	0	0	0	0	0	0	0	0	0	0	0	0	0	0	0	0	0	0	1
	Darker	0	0	0	0	0	0	0	0	0	0	0	0	0	0	0	0	0	0	0	0	0	0	1	0
	△	↓								↓								↓							
	▽	↓								↓								↓							
	Brighter	0	0	0	0	0	0	0	0	0	0	0	0	0	0	0	0	1	1	1	1	1	1	0	1
	▽	0	0	0	0	0	0	0	0	0	0	0	0	0	0	0	0	1	1	1	1	1	1	1	0
	Blue	0	0	0	0	0	0	0	0	0	0	0	0	0	0	0	0	1	1	1	1	1	1	1	1
Gray Scale Of White & Black	Black	0	0	0	0	0	0	0	0	0	0	0	0	0	0	0	0	0	0	0	0	0	0	0	0
	△	0	0	0	0	0	0	0	1	0	0	0	0	0	0	0	1	0	0	0	0	0	0	0	1
	Darker	0	0	0	0	0	0	1	0	0	0	0	0	0	0	1	0	0	0	0	0	0	0	1	0
	△	↓								↓								↓							
	▽	↓								↓								↓							
	Brighter	1	1	1	1	1	1	0	1	1	1	1	1	1	1	0	1	1	1	1	1	1	1	0	1
	▽	1	1	1	1	1	1	1	0	1	1	1	1	1	1	1	0	1	1	1	1	1	1	1	0
	White	1	1	1	1	1	1	1	1	1	1	1	1	1	1	1	1	1	1	1	1	1	1	1	1

9.0 POWER SEQUENCE

To prevent a latch-up or DC operation of the LCD module, the power on/off sequence should be as shown in below

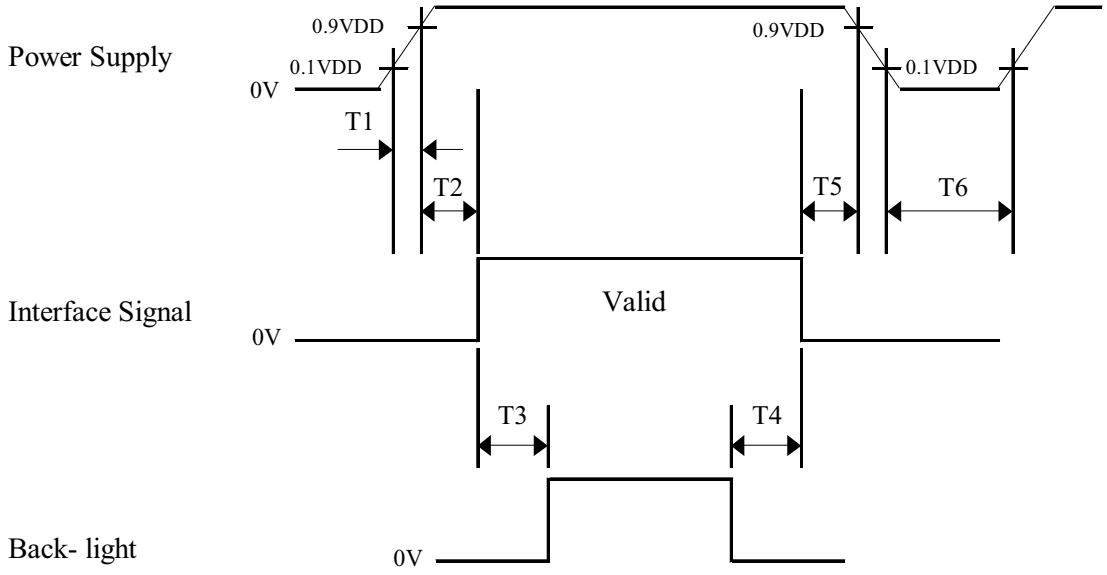

- 0 < T1 ≤ 10 ms
- 0 < T2 ≤ 50 ms
- 100 ms ≤ T3, T4
- 0 < T5 ≤ 50 ms
- 1 sec < T6

Notes:

1. When the power supply VDD is 0V, Keep the level of input signals on the low or keep high impedance.
2. Do not keep the interface signal high impedance when power is on.
3. Back Light must be turn on after power for logic and interface signal are valid.

10.0 MECHANICAL CHARACTERISTICS

10.1 Dimensional Requirements

FIGURE 6 shown in appendix shows mechanical outlines for the model.

Parameter	Specification	Unit
Dimensional outline Horizontal Vertical Thickness	 331.6±0.5 254.7±0.5 12.7±0.3	mm
Weight	1,250 max.	gram
Active area	304.128 (H) × 228.096(V)	mm
Pixel pitch	0.297(H) × 0.297(V)	mm
Number of pixels	1024(H) × 768(V)	pixels

10.2 Mounting

See FIGURE 5 shown in appendix

10.3 Anti-Glare and Polarizer Hardness.

The surface of the LCD has an anti-glare coating to minimize reflection and a coating to reduce scratching.

10.4 Light Leakage

There shall not be visible light from the back-lighting system around the edges of the screen as seen from a distance 50 cm from the screen with an overhead light level of 350lux. The manufacture shall furnish limit samples of the panel showing the light leakage acceptable.

11.0 RELIABILITY TEST

No	Test Items	Conditions
1	High temperature storage test	Ta = 60 °C, 240 hrs
2	Low temperature storage test	Ta = -20 °C, 240 hrs
3	High temperature & high humidity operation test	Ta = 50 °C, 80 %RH, 240 hrs
4	High temperature operation test	Ta = 50 °C, 240 hrs
5	Low temperature operation test	Ta = 0 °C, 240 hrs
6	Thermal shock	Ta = -20 °C ↔ 60 °C (30 min), 100 cycle
7	Vibration test (non-operating)	Frequency : 10 ~ 300 Hz Gravity/AMP : 1.5G Period : X, Y, Z 30 min
8	Shock test (non-operating)	Gravity : 150G Pulse width : 6ms, half sine wave ±X, ±Y, ±Z Once for each direction
9	Electrostatic discharge test	Air : 150 pF, 330Ω, 15KV Contact : 150 pF, 330Ω, 8KV

12.0 HANDLING & CAUTIONS

12.1 Cautions when taking out the module

- Pick the pouch only, when taking out module from a shipping package.

12.2 Cautions for handling the module

- As the electrostatic discharges may break the LCD module, handle the LCD module with care. Peel a protection sheet off from the LCD panel surface as slowly as possible.
- As the LCD panel and backlight element are made from fragile glass material, impulse and pressure to the LCD module should be avoided.
- As the surface of the polarizer is very soft and easily scratched, use a soft dry cloth without chemicals for cleaning.
- Do not pull the interface connector in or out while the LCD module is operating.
- Put the module display side down on a flat horizontal plane.
- Handle connectors and cables with care.

12.3 Cautions for the operation

- When the module is operating, do not lose MCLK, DE signals. If any one of these signals were lost, the LCD panel would be damaged.
- Obey the supply voltage sequence. If wrong sequence were applied, the module would be damaged.

12.4 Cautions for the atmosphere

- Dewdrop atmosphere should be avoided.
- Do not store and/or operate the LCD module in a high temperature and/or humidity atmosphere. Storage in an electro-conductive polymer-packing pouch and under relatively low temperature atmosphere is recommended.

12.5 Cautions for the module characteristics

- Do not apply fixed pattern data signal to the LCD module at product aging.
- Applying fixed pattern for a long time may cause image sticking.

12.6 Other cautions

- Do not disassemble and/or re-assemble LCD module.
- Do not re-adjust variable resistor or switch etc.
- When returning the module for repair or etc, please pack the module not to be broken. We recommend using the original shipping packages.

13.0 APPENDIX

Figure 1. Measurement Set Up

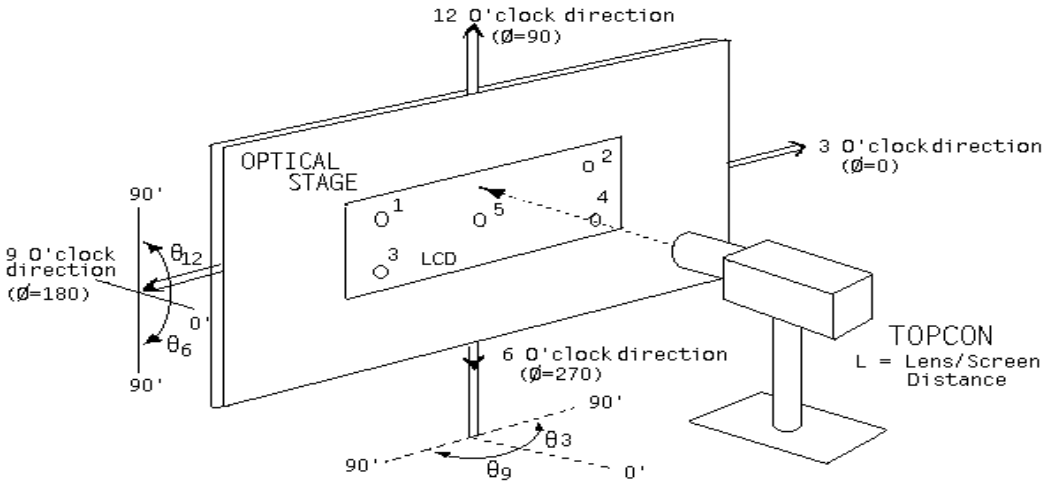

Figure 2. Average Luminance Measurement Locations & Uniformity Measurement Locations

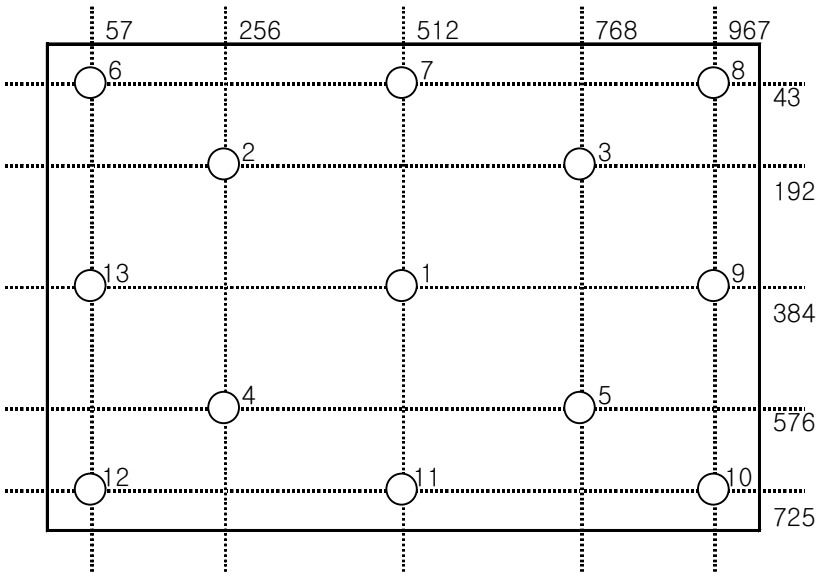

Figure 3. Response Time Testing

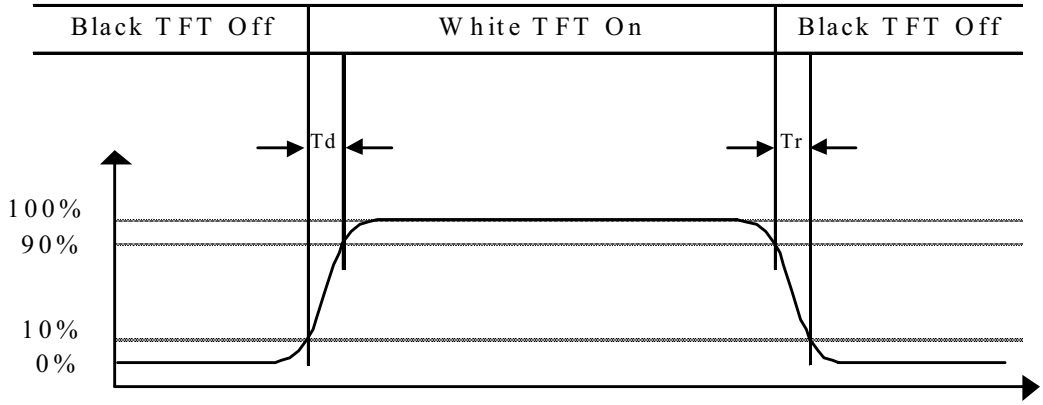

Figure 4. Cross Modulation Test Description

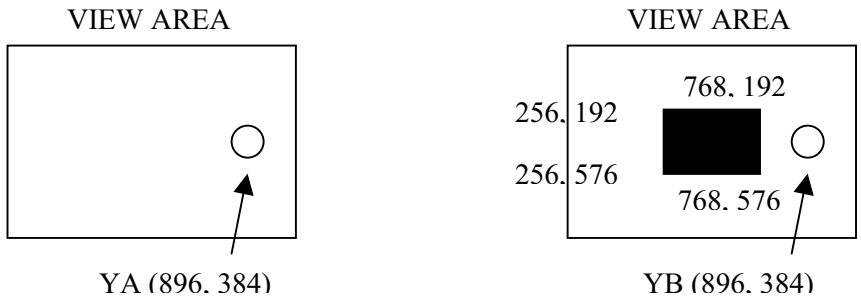

$$\text{Cross-Talk} = \left| \frac{YB - YA}{YA} \right| \times 100$$

Where:

Y_A = Initial luminance of measured area (cd/m^2)

Y_B = Subsequent luminance of measured area (cd/m^2)

The location measured will be exactly the same in both patterns.

Figure 5. TFT-LCD Module Outline Dimensions (Front view)

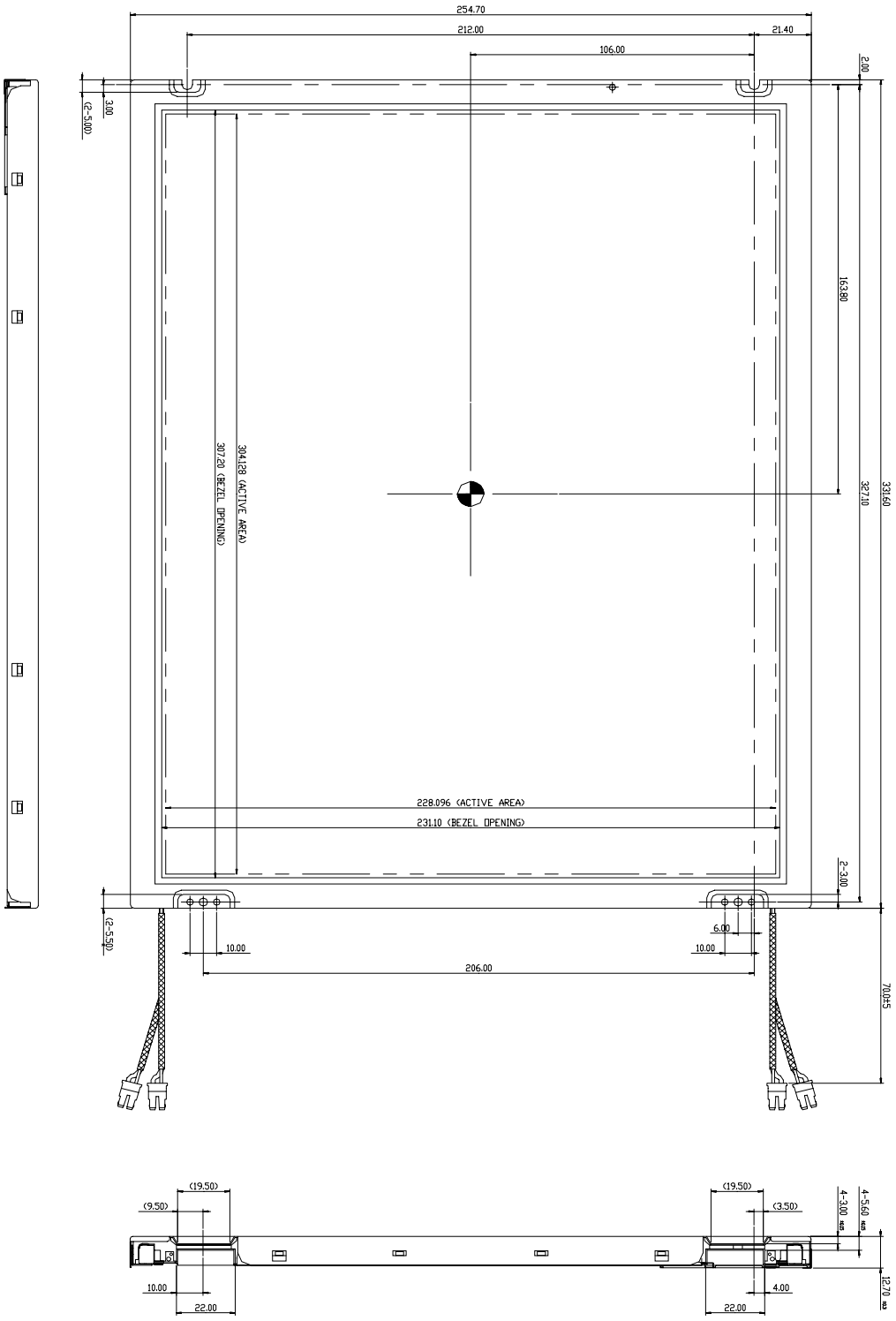
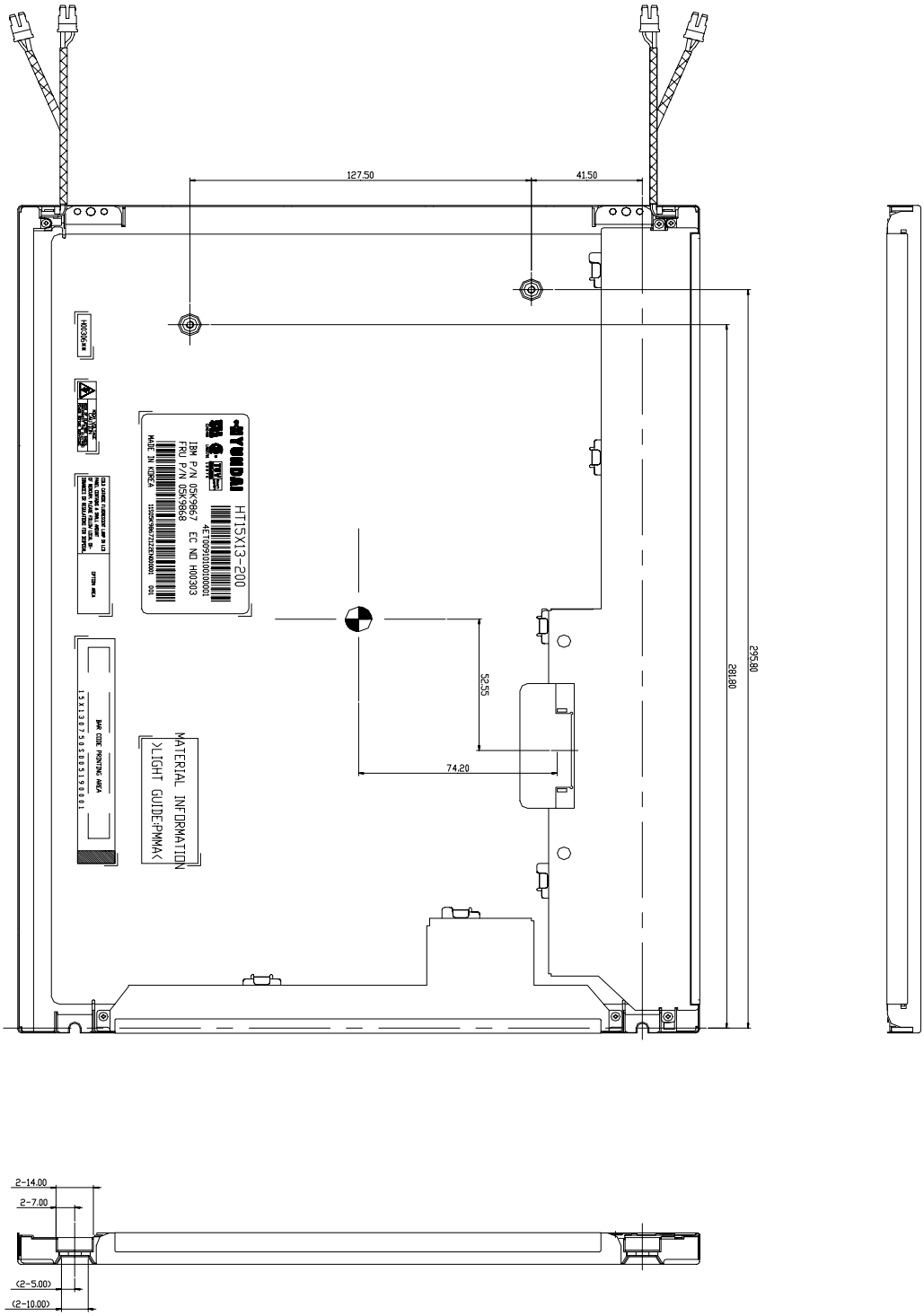
Figure 6. TFT-LCD Module Outline Dimensions (Rear view)