INNOLUX DISPLAY CORPORATION

LCD MODULE

SPECIFICATION

Customer: _____

Model Name: AT102TN43

SPEC NO.: A102-43-TT-03

Date: 2007/08/29

Version: 03

☐ Preliminary Specification

■ Final Specification

For Customer's Acceptance

Approved by	Comment

Approved by	Reviewed by	Prepared by

Confidential

版權屬於群創所有，禁止任何未經授權的使用

The copyright belongs to InnoLux. Any unauthorized use is prohibited.

The copyright belongs to INNOLUX. Any unauthorized use is prohibited.

INNOLUX

InnoLux copyright 2004
All rights reserved,
Copying forbidden.

Record of Revision

Version	Revise Date	Page	Content
Final-Spec.01	2007/04/05	1	Modify Backlight power consumption
			Modify Panel power consumption
		4	Modify Power Voltage V_{CC} Values
		5	Modify Current Consumption Values
		10	Add Test Conditions 1
		11	Modify the test instrument of viewing angle from TOPCON BM-7 to ELDIM
		17	Modify Carton Weight
Final-Spec.02	2007/06/30	1	Modify the Backlight power consumption
		1,18	Modify LCM Weight
		2	Add note 1 for pin 20,21
		3	Add definition of pin 30
			Modify the definition of pin 4 & pin 5
		5	Modify the Max. Values of Operation Temperature and Storage Temperature
		8	Add Input Timing
		9	Add 6bit mode
		15	Modify the Test Conditions of High Temperature Storage and High Temperature Operation
		17	Modify the Mechanical Drawing
Final-Spec.03	2007/08/29	17	Modify note of connector CN1

版權屬於群創所有, 禁止任何未經授權的使用
The copyright belongs to INNOLUX. Any unauthorized use is prohibited.
The copyright belongs to InnoLux. Any unauthorized use is prohibited.

INNOLUX

Contents

1. General Specifications 1
2. Pin Assignment 1
3. Operation Specifications 5
   3.1. Absolute Maximum Ratings 5
   3.2. Typical Operation Conditions 6
   3.3. Power Sequence 7
   3.4. Timing Characteristics 8
      3.4.1 Timing Conditions 8
      3.4.2Timing Diagram 9
4. Optical Specifications 11
5. Reliability Test Items 15
6. General Precautions 16
   6.1. Safety 16
   6.2. Handling 16
   6.3. Static Electricity 16
   6.4. Storage 16
   6.5. Cleaning 16
7. Mechanical Drawing 17
8. Package Drawing 18
   8.1 Packaging Material Table 18
   8.2 Packaging Quantity 18
   8.3 Packaging Drawing 19

INNOLUX Confidential

版權屬於群創所有，禁止任何未經授權的使用

The copyright belongs to INNOLUX. Any unauthorized use is prohibited.

The copyright belongs to InnoLux. Any unauthorized use is prohibited.

1. General Specifications

No.	Item	Specification	Remark
1	LCD size	10.2 inch(Diagonal)	
2	Driver element	a-Si TFT active matrix	
3	Resolution	1024X3(RGB)X600	
4	Display mode	Normally white, Transmissive	
5	Dot pitch	0.0722(W)X0.2192(H) mm	
6	Active area	221.7984 (W)X131.52 (H) mm	
7	Module size	235.0(W)X145.8(H)X5.9(D) mm	Note 1
8	Surface treatment	Anti-Glare	
9	Color arrangement	RGB-stripe	
10	Interface	Digital (LVDS)	
11	Backlight power consumption	3.500W(Typ.)	Note 2
12	Panel power consumption	0.990W(Typ.)	Note 3
13	Weight	253g(Typ.)	

Note 1: Refer to Mechanical Drawing.
Note 2: Including LED Driver power consumption.
Note 3: Including T-con Board power consumption.

版權屬於群創所有, 禁止任何未經授權的使用
The copyright belongs to InnoLux. Any unauthorized use is prohibited.

2. Pin Assignment

TFT LCD Panel Driving Section

LVDS Connector is used for the module electronics interface. The recommended model is MDF76KBW-30S-1H(58) manufactured by Hirose.

Pin No.	Symbol	I/O	Function	Remark
1	V_{CC}	P	Power Voltage for digital circuit	
2	V_{CC}	P	Power Voltage for digital circuit	
3	V_{CC}	P	Power Voltage for digital circuit	
4	U/D	I	Select up or down scanning direction	Note5,6
5	L/R	I	Select left to right scanning direction	Note5,6
6	VSS	P	Ground	
7	VSS	P	Ground	
8	Rin0-	I	- LVDS differential data input (R0-R5,G0)	
9	Rin0+	I	+ LVDS differential data input (R0-R5,G0)	
10	VSS	P	Ground	
11	Rin1-	I	- LVDS differential data input (G1-G5,B0-B1)	
12	Rin1+	I	+ LVDS differential data input (G1-G5,B0-B1)	
13	VSS	P	Ground	
14	Rin2-	I	- LVDS differential data input (B2-B5,HS,VS,DE)	
15	Rin2+	I	+ LVDS differential data input (B2-B5,HS,VS,DE)	
16	VSS	P	Ground	
17	ClkIN-	I	-LVDS differential clock input	
18	ClkIN+	I	+LVDS differential clock input	
19	VSS	P	Ground	
20	Rin3-	I	- LVDS differential data input (R6-R7,G6-G7,B6-B7)	Note1

The copyright belongs to InnoLux. Any unauthorized use is prohibited.

21	Rin3+	I	+ LVDS differential data input (R6-R7,G6-G7,B6-B7)	Note1
22	VSS	P	Ground	
23	V_{LED}	P	Power Voltage for LED circuit	
24	V_{LED}	P	Power Voltage for LED circuit	
25	G_{LED}	P	Ground for LED circuit	
26	G_{LED}	P	Ground for LED circuit	
27	NC	—	No Connection	
28	NC	—	No Connection	
29	ADJ	P	Adjust the Back Light brightness	Note3,4
30	DTH	P	Dithering function	Note2

Note1:If Input data is 6 bit,Rin3-&Rin3+ can't be connected.
Note2:If Input data is 6 bit,DTH can`t be connected; If Input data is 8 bit, DTH must be connected to Ground.
Note3: Pin.3 is used to adjust brightness.

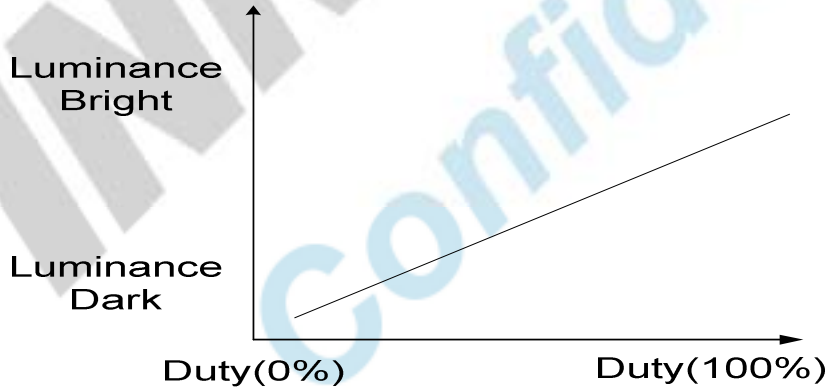

Note 4:ADJ signal=0~3.3V,operation frequency:100~300Hz

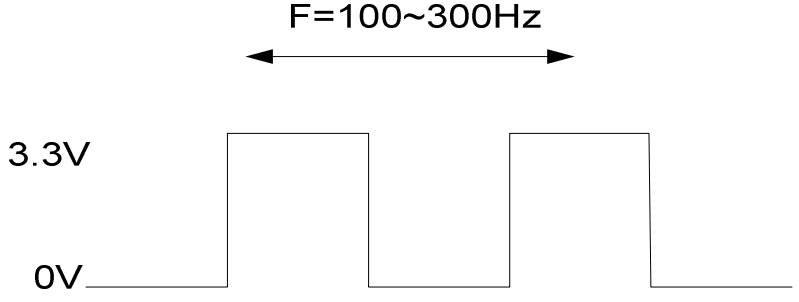

版權屬於群創所有，禁止任何未經授權的使用
The copyright belongs to InnoLux. Any unauthorized use is prohibited.

Note 5：Selection of scanning mode

Setting of scan control input		Scanning direction
U/D	L/R	
GND	V_{CC}	Up to down, left to right
V_{CC}	GND	Down to up, right to left
GND	GND	Up to down, right to left
V_{CC}	V_{CC}	Down to up, left to right

Note 6: Definition of scanning direction.
Refer to the figure as below:

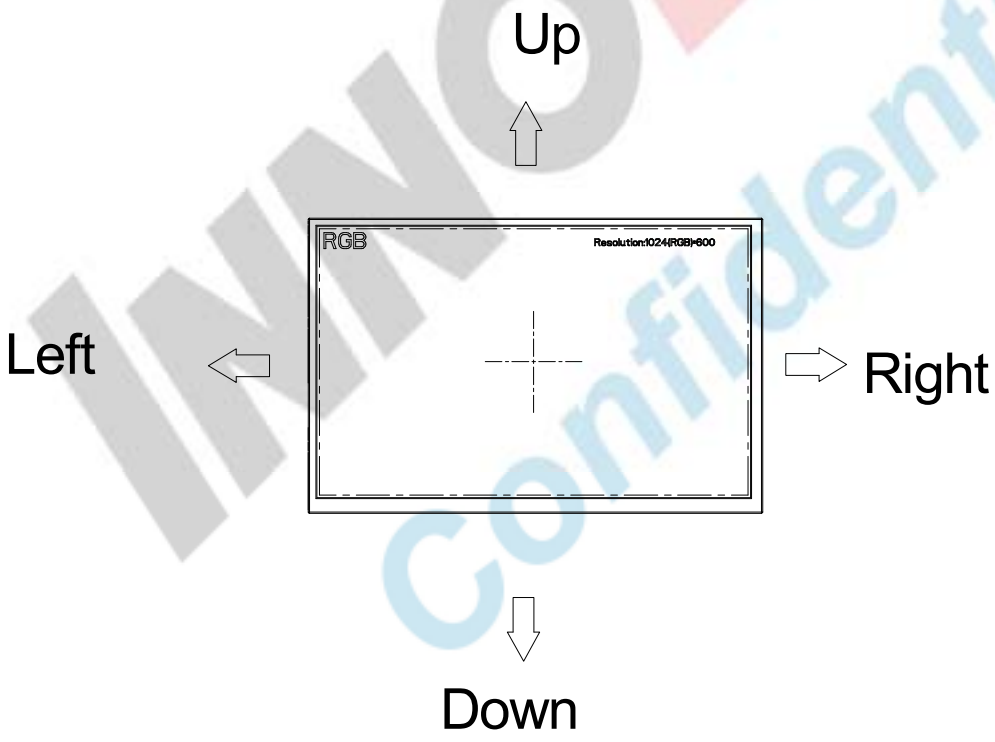

版權屬於群創所有，禁止任何未經授權的使用
The copyright belongs to InnoLux. Any unauthorized use is prohibited.

3. Operation Specifications

3.1.Absolute Maximum Ratings

(Note 1)

Item	Symbol	Values		Unit	Remark
		Min.	Max.		
Power Voltage	V_{CC}	-0.3	3.6	V	
	V_{LED}	-	5.5	V	
Input Signal Voltage	V_I	-0.3	6.3	V	Note 2
Operation Temperature	T_{OP}	-20	60	℃	
Storage Temperature	T_{ST}	-30	70	℃	

Note 1: The absolute maximum rating values of this product are not allowed to be exceeded at any times. Should a module be used with any of the absolute maximum ratings exceeded, the characteristics of the module may not be recovered, or in an extreme case, the module may be permanently destroyed.

Note 2: The product is subject to be damaged permanently if stresses beyond those absolute maximum ratings listed above.

版權屬於群創所有，禁止任何未經授權的使用

The copyright belongs to InnoLux. Any unauthorized use is prohibited.

3.2. Typical Operation Conditions

Item	Symbol	Values			Unit	Remark
		Min.	Typ.	Max.		
Power Voltage	V_{CC}	3.1	3.3	3.5	V	Note 1
	V_{LED}	4.8	5.0	5.2	V	Note 2
Current Consumption	I_{CC}	-	300	350	mA	
	I_{LED}	-	700	850	mA	Note 3
Differential Input High Threshold	V_{THLVDS}	-	-	100.0	mV	V_{cm}=1.2V
Differential Input Low Threshold	V_{TLLVDS}	-100.0	-	-	mV	
LVDS Receiver Input Current	I_{IN}	-	-	±10.0	μA	V_{IN}=2.4V or 0V V_{CC} =3.6V
LVDS Receiver Input Common Voltage	V_{CM}	0.2	-	1.9	V	V_{CC} =3.3V T_a=+25 ℃
LED life time	-	20,000	-	-	Hr	Note 4

Note 1: V_{CC} setting should match the signals output voltage of customer's system board.
Note 2: LED driving voltage.
Note 3: LED driving current.
Note 4: The "LED life time" is defined as the module brightness decrease to 50% original brightness at Ta=25℃ and V_{LED} =5.0V. The LED lifetime could be decreased if operating V_{LED} is larger than 5.0V.

版權屬於群創所有，禁止任何未經授權的使用
The copyright belongs to InnoLux. Any unauthorized use is prohibited.

3.3. Power Sequence

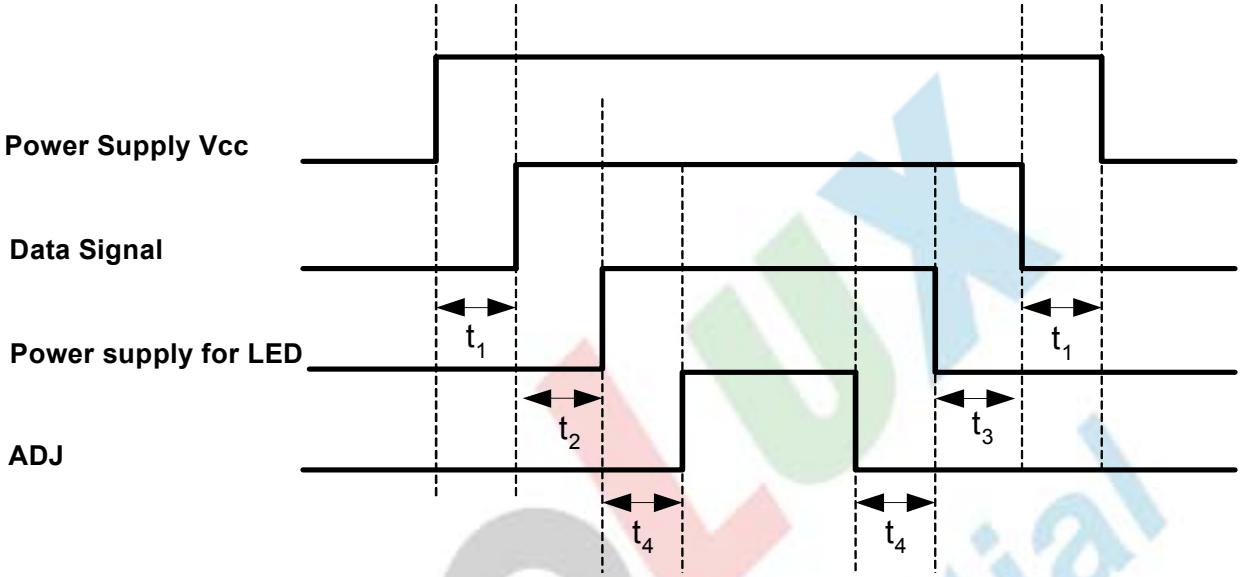

t_1 > 50 mSec
t_2 ≧ 200 mSec
t_3 ≧ 200 mSec
t_4 ≧ 50mSec

Note: Data Signal includes Rin0- ~ Rin3-,Rin0+ ~ Rin3+,CLKIN- , CLKIN+.

INNOLUX Confidential
版權屬於群創所有, 禁止任何未經授權的使用
The copyright belongs to InnoLux. Any unauthorized use is prohibited.

3.4.Timing Characteristics

3.4.1 Timing Conditions

Switching Characteristics

(recommended operating condition unless otherwise noted)

Item	Symbol	Values			Unit	Remark
		Min.	Typ.	Max.		
RxCLKIN Period	t_{RCP}	11.76	T	50	ns	Note 1
RxCLKIN High Time	t_{RCH}	-	T/2	-	ns	
RxCLKIN Low Time	t_{RCL}	-	T/2	-	ns	
PAD0/1 to RxCLKIN Delay	t_{RCD}	-	3T/7	-	ns	
Data Setup to RxCLKIN	t_{RS}	1.9	-	-	ns	
Data Hold from RxCLKIN	t_{RH}	3.0	-	-	ns	
Input Data Position 0(T=11.76ns)	T_{RIP1}	-0.4	0	0.4	ns	Note 2
Input Data Position 1(T=11.76ns)	T_{RIP0}	T/7-0.4	T/7	T/7+0.4	ns	Note 2
Input Data Position 2(T=11.76ns)	T_{RIP6}	2T/7-0.4	2T/7	2T/7+0.4	ns	Note 2
Input Data Position 3(T=11.76ns)	T_{RIP5}	3T/7-0.4	3T/7	3T/7+0.4	ns	Note 2
Input Data Position 4(T=11.76ns)	T_{RIP4}	4T/7-0.4	4T/7	4T/7+0.4	ns	Note 2
Input Data Position 5(T=11.76ns)	T_{RIP3}	5T/7-0.4	5T/7	5T/7+0.4	ns	Note 2
Input Data Position 6(T=11.76ns)	T_{RIP2}	6T/7-0.4	6T/7	6T/7+0.4	ns	Note 2

Note 1: T= RxCLKIN Period

Note 2 : V_{CC} =3.3V , Ta=25℃

Input Timming(only for DE Mode)

Parameter	Min	Typ	Max	Unit
H-Total	1185	1344	1800	CLK
H-Active	1024	1024	1024	CLK
H-Blanking	161	320	776	CLK
V-Total	628	635	650	LINE
V-Active	600	600	600	LINE
V-Blanking	28	35	50	LINE

The copyright belongs to InnoLux. Any unauthorized use is prohibited.

3.4.2 Timing Diagram

8 bit Mode:

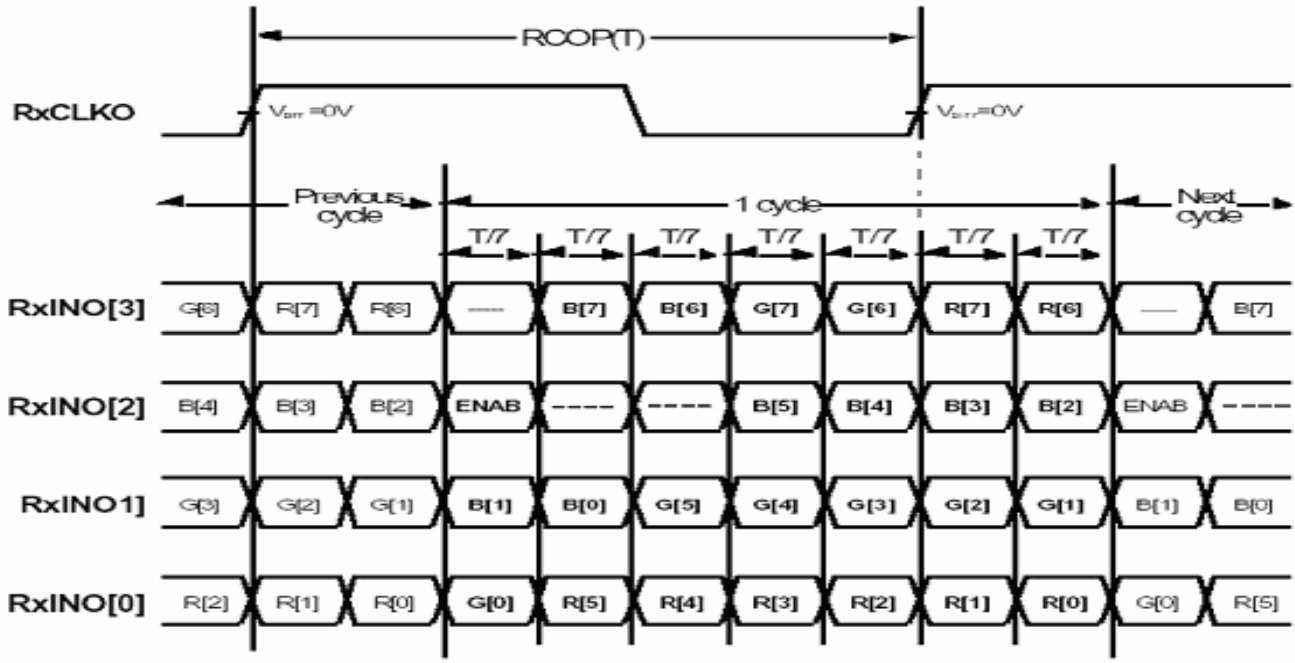

6 bit Mode:

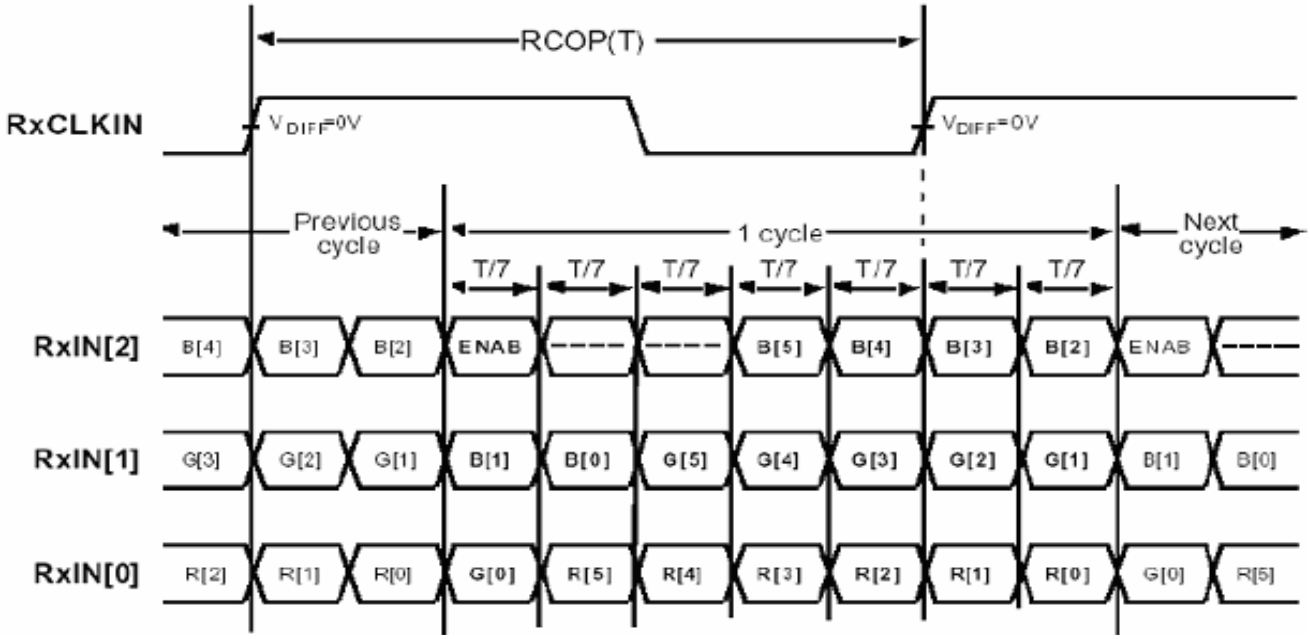

Note : R/G/B[7]s are MSBs and R/G/B[0]s are LSBs

版權屬於群創所有, 禁止任何未經授權的使用
The copyright belongs to InnoLux. Any unauthorized use is prohibited.

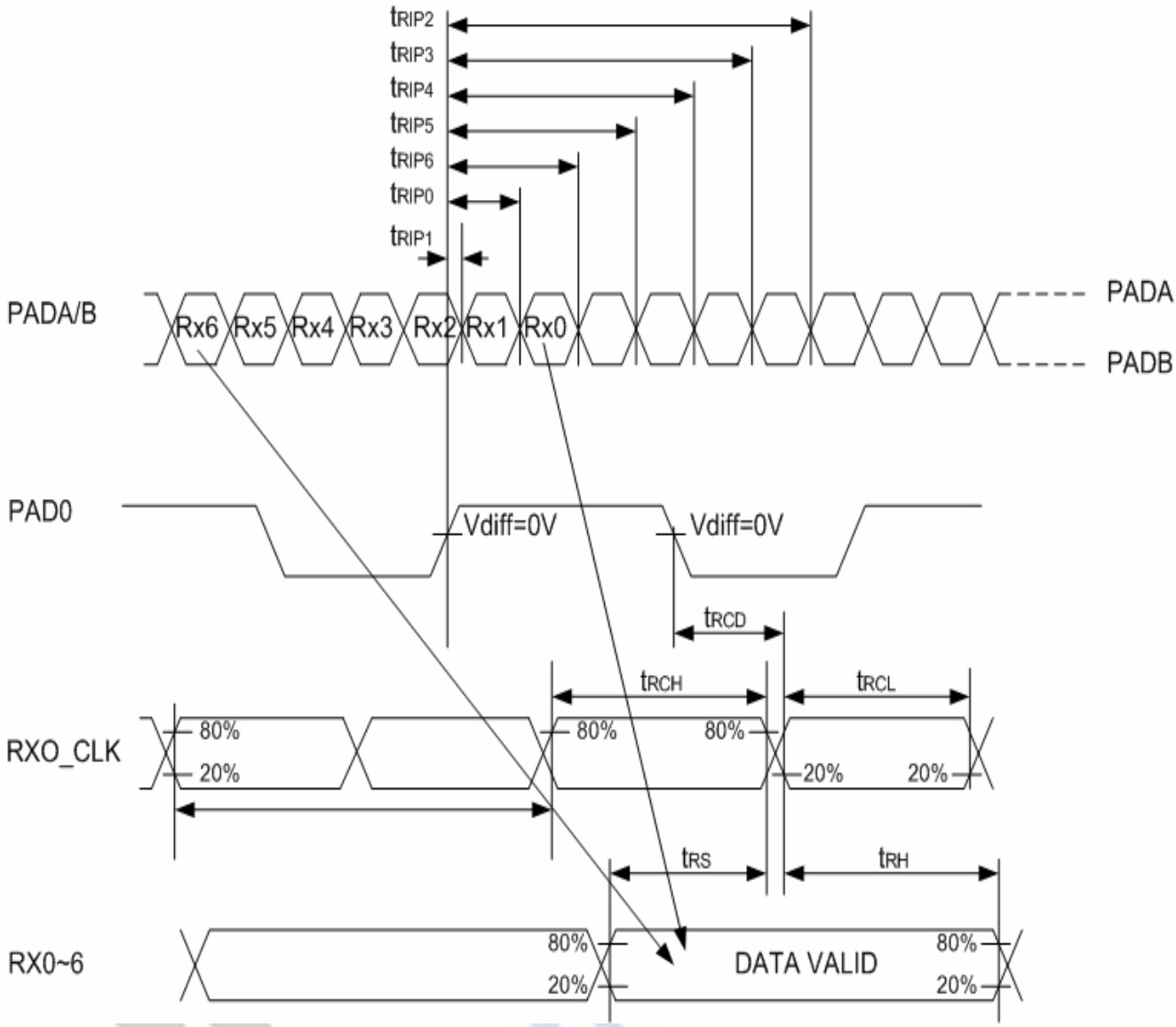

LVDS AC Timing Diagrams

版權屬於群創所有，禁止任何未經授權的使用

The copyright belongs to InnoLux. Any unauthorized use is prohibited.

4. Optical Specifications

Item	Symbol	Condition	Values			Unit	Remark
			Min.	Typ.	Max.		
Viewing angle (CR≥ 10)	θ_L	Φ=180°(9 o'clock)	70	80	-	degree	Note 1
	θ_R	Φ=0°(3 o'clock)	70	80	-		
	θ_T	Φ=90°(12 o'clock)	60	70	-		
	θ_B	Φ=270°(6 o'clock)	70	80	-		
Response time	T_{ON}	Normal θ=Φ=0°	-	10	20	msec	Note 3
	T_{OFF}		-	15	30	msec	Note 3
Contrast ratio	CR		400	500	-	-	Note 4
Color chromaticity	W_X		0.26	0.31	0.36	-	Note 2 Note 5 Note 6
	W_Y		0.28	0.33	0.38	-	
Luminance	L		250	300	-	-	Note 6
Luminance uniformity	Y_U		70	75	-	%	Note 6,7

Test Conditions:

1. Viewing angle is tested when V_{black} =4.9V; V_{white} =0.6V
2. V_{CC}=3.3V, V_{LED}=5.0V, the ambient temperature is 25℃.
3. The test systems refer to Note 2.

版權屬於群創所有, 禁止任何未經授權的使用
The copyright belongs to InnoLux. Any unauthorized use is prohibited.

Note 1: Definition of viewing angle range

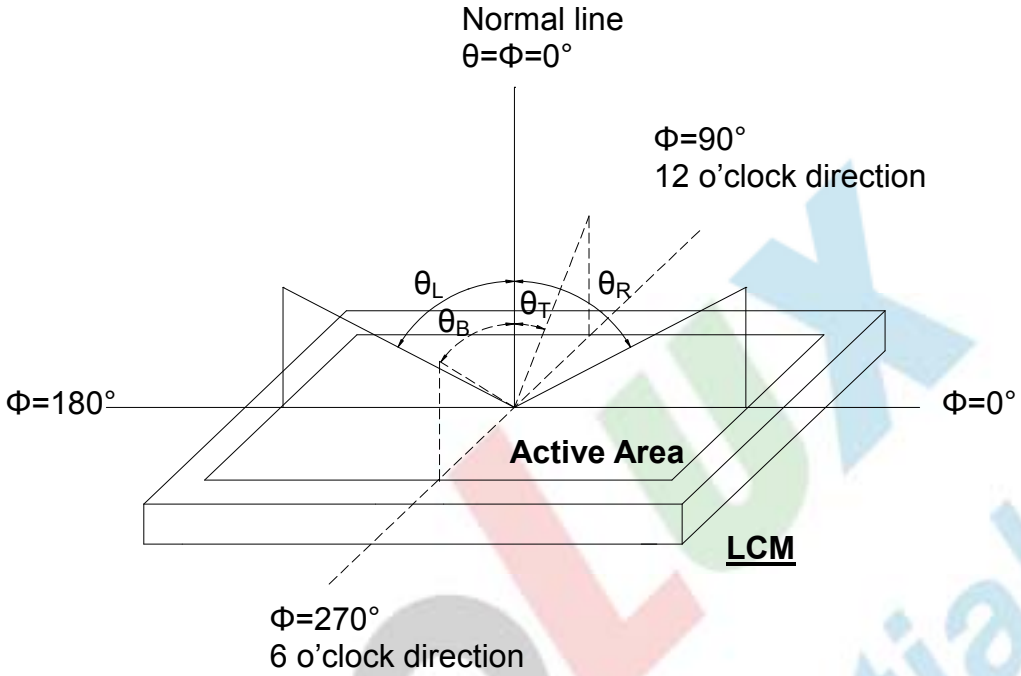

Fig. 4-1 Definition of viewing angle

Note 2: Definition of optical measurement system.

The optical characteristics should be measured in dark room. After 30 minutes operation, the optical properties are measured at the center point of the LCD screen. (Viewing angle is measured by ELDIM-EZ contrast/Height :1.2mm ,Response time is measured by Photo detector TOPCON BM-7, other items are measured by BM-5A/ Field of view: 1° /Height: 500mm.)

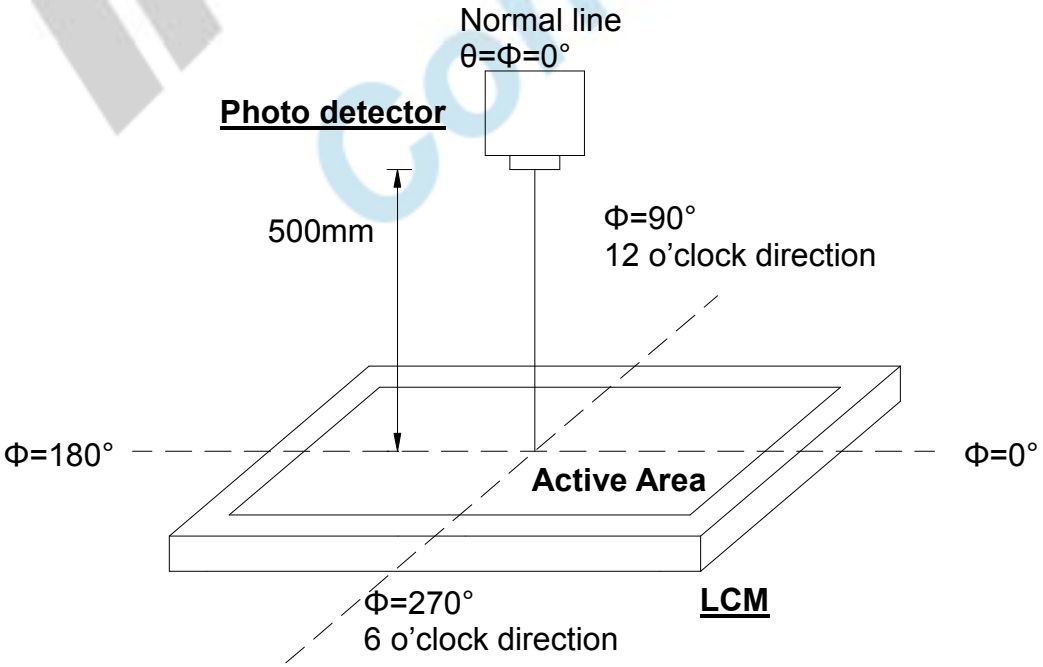

Fig. 4-2 Optical measurement system setup

版權屬於群創所有，禁止任何未經授權的使用

The copyright belongs to InnoLux. Any unauthorized use is prohibited.

Note 3: Definition of Response time

The response time is defined as the LCD optical switching time interval between "White" state and "Black" state. Rise time (T_{ON}) is the time between photo detector output intensity changed from 90% to 10%. And fall time (T_{OFF}) is the time between photo detector output intensity changed from 10% to 90%.

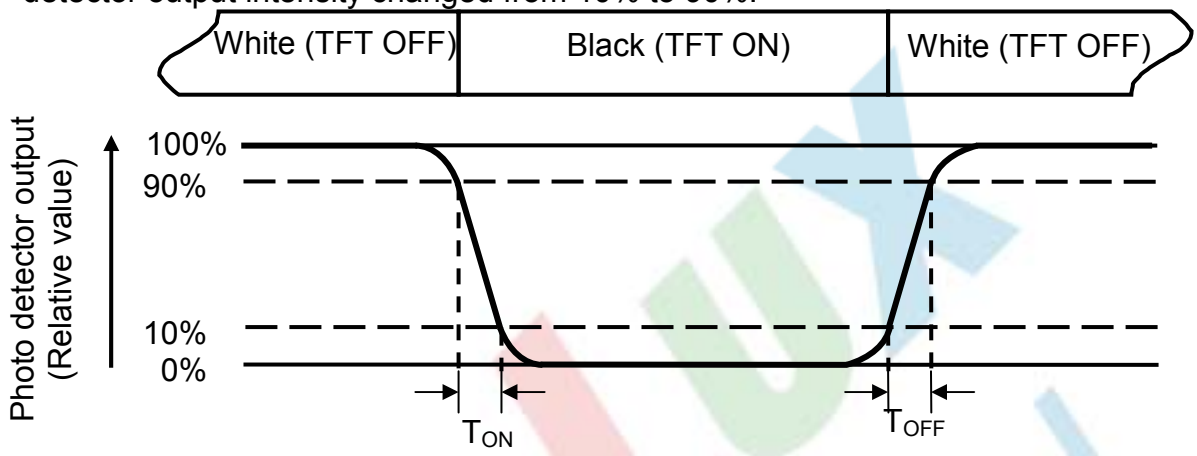

Fig. 4-3 Definition of response time

Note 4: Definition of contrast ratio

$$\text{Contrast ratio (CR)} = \frac{\text{Luminance measured when LCD on the "White" state}}{\text{Luminance measured when LCD on the "Black" state}}$$

Note 5: Definition of color chromaticity (CIE1931)

Color coordinates measured at center point of LCD.

Note 6: All input terminals LCD panel must be ground while measuring the center area of the panel. The LED driving condition is V_{LED}=5.0V.

版權屬於群創所有，禁止任何未經授權的使用

The copyright belongs to InnoLux. Any unauthorized use is prohibited.

Note 7: Definition of Luminance Uniformity

Active area is divided into 9 measuring areas (Refer to Fig. 4-4).Every measuring point is placed at the center of each measuring area.

$$Luminance\ \ Uniformity\ (Yu) = \frac{B_{min}}{B_{max}}$$

L-------Active area length W----- Active area width

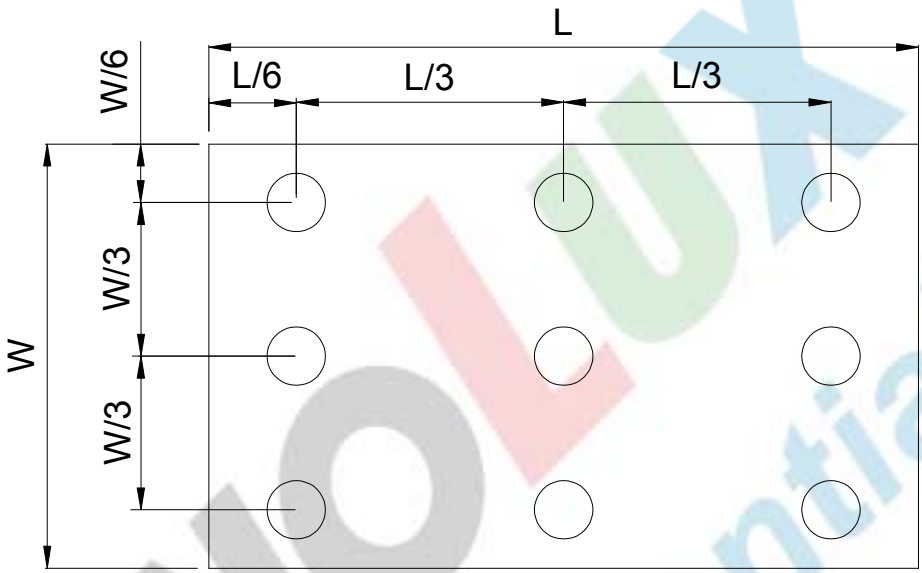

Fig. 4-4 Definition of measuring points

B_{max}: The measured maximum luminance of all measurement position.
B_{min}: The measured minimum luminance of all measurement position.

版權屬於群創所有，禁止任何未經授權的使用
The copyright belongs to InnoLux. Any unauthorized use is prohibited.

5. Reliability Test Items

(Note3)

Item	Test Conditions	Remark
High Temperature Storage	Ta = 70℃ 240 hrs	Note 1, 4
Low Temperature Storage	Ta =-30℃ 240hrs	Note 1, 4
High Temperature Operation	Ts = 60℃ 240hrs	Note 2, 4
Low Temperature Operation	Ta =-20℃ 240hrs	Note 1, 4
Operate at High Temperature and Humidity	+40℃, 90%RH max. 240 hrs	Note 4
Thermal Shock	(-30)℃/30 min ~ (+70)℃/30 min for a total 100 cycles, Start with cold temperature and end with high temperature.	Note 4
Vibration Test	Frequency range:10~55Hz Stroke:1.5mm Sweep:10Hz~55Hz~10Hz 2 hours for each direction of X. Y. Z. (6 hours for total)	
Mechanical Shock	100G 6ms,±X, ±Y, ±Z 3 times for each direction	
Package Vibration Test	Random Vibration : 0.015G*G/Hz from 5-200HZ, -6dB/Octave from 200-500HZ 2 hours for each direction of X. Y. Z. (6 hours for total)	
Package Drop Test	Height:60 cm 1 corner, 3 edges, 6 surfaces	
Electro Static Discharge	± 2KV, Human Body Mode, 100pF/1500Ω	

Note 1: Ta is the ambient temperature of samples.
Note 2: Ts is the temperature of panel's surface.
Note 3: In the standard condition, there shall be no practical problem that may affect the display function. After the reliability test, all the measurement shall be executed after the product is left alone for two hours; and the product only guarantees operation, but dosen't guarantee all the cosmetic specification.
Note 4: Before cosmetic and function tests , the product must have enough recovery time, at least 2 hours at room temperature.

The copyright belongs to InnoLux. Any unauthorized use is prohibited.

6. General Precautions

6.1. Safety

Liquid crystal is poisonous. Do not put it in your mouth. If liquid crystal touches your skin or clothes, wash it off immediately by using soap and water.

6.2. Handling

1. The LCD panel is plate glass. Do not subject the panel to mechanical shock or to excessive force on its surface.
2. The polarizer attached to the display is easily damaged. Please handle it carefully to avoid scratch or other damages.
3. To avoid contamination on the display surface, do not touch the module surface with bare hands.
4. Keep a space so that the LCD panels do not touch other components.
5. Put cover board such as acrylic board on the surface of LCD panel to protect panel from damages.
6. Transparent electrodes may be disconnected if you use the LCD panel under environmental conditions where the condensation of dew occurs.
7. Do not leave module in direct sunlight to avoid malfunction of the ICs.

6.3. Static Electricity

1. Be sure to ground module before turning on power or operating module.
2. Do not apply voltage which exceeds the absolute maximum rating value.

6.4. Storage

1. Store the module in a dark room where must keep at 25±10℃ and 65%RH or less.
2. Do not store the module in surroundings containing organic solvent or corrosive gas.
3. Store the module in an anti-electrostatic container or bag.

6.5. Cleaning

1. Do not wipe the polarizer with dry cloth. It might cause scratch.
2. Only use a soft sloth with IPA to wipe the polarizer, other chemicals might permanent damage to the polarizer.

版權屬於群創所有，禁止任何未經授權的使用
The copyright belongs to InnoLux. Any unauthorized use is prohibited.

7. Mechanical Drawing

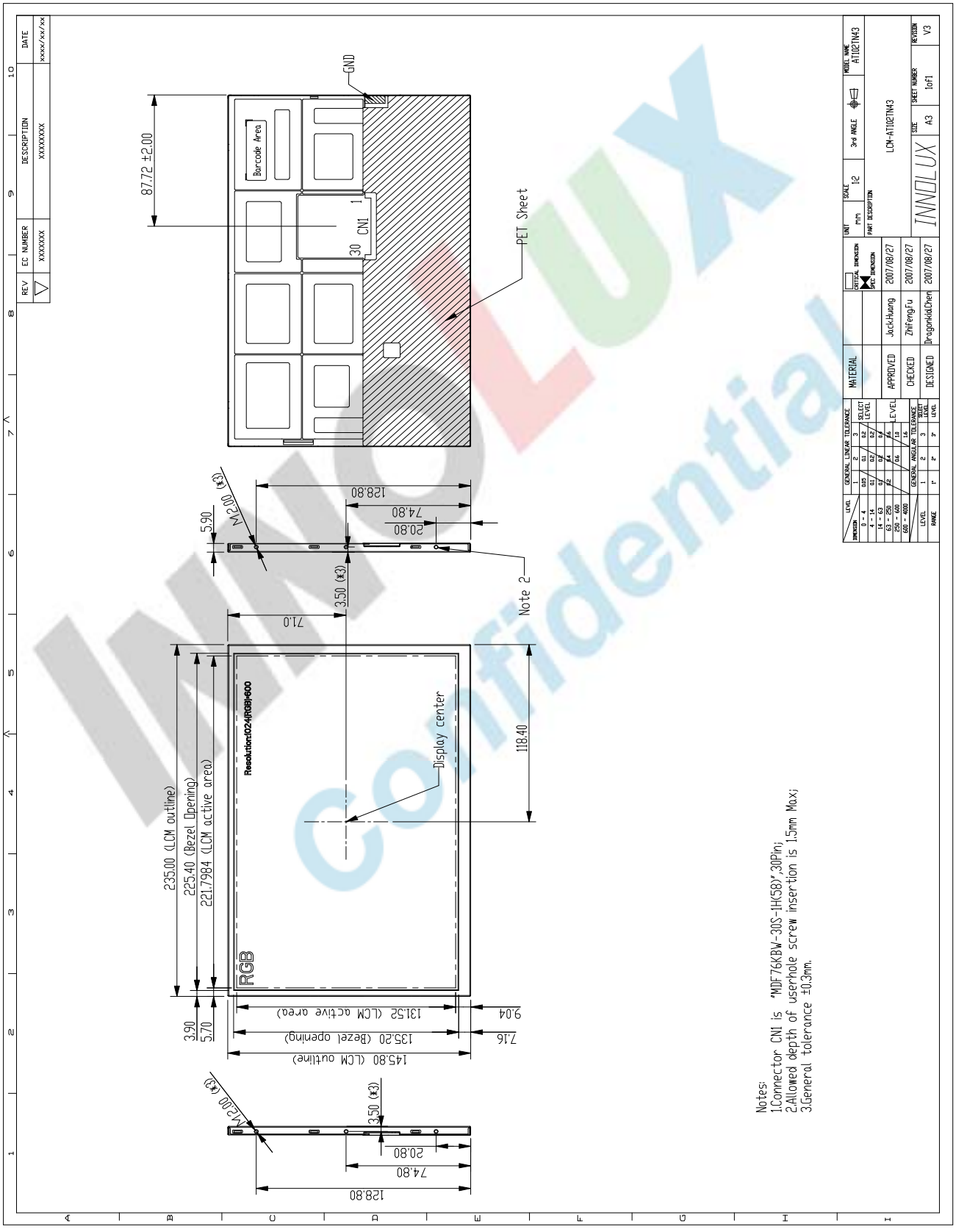

版權屬於群創所有，禁止任何未經授權的使用

The copyright belongs to InnoLux. Any unauthorized use is prohibited.

8. Package Drawing

8.1 Packaging Material Table

No.	Item	Model (Material)	Dimensions(mm)	Unit Weight (kg)	Quantity	Remark
1	LCM Module	AT102TN43	235.0x145.8x5.9	0.253	25pcs	
2	Partition	BC Corrugated paper	512x349x226	1.350	1	
3	Partition Paper	B Corrugated paper	510x350x7	0.148	2	
4	Corrugated Bar	B Corrugated paper	512x370x7	0.110	2	
5	Dust-Proof Bag	PE	900x700x0.05	0.010	1	
6	A/S Bag	PE	280x200x0.05	0.001	25	10^{9}～ $10^{11}\Omega$/sq
7	Carton	Corrugated paper	530x355x255	1.100	1	
8	Total weight	9.326kg ± 5%				

8.2 Packaging Quantity

Total LCM quantity in Carton: no. of Partition 1 Rows x quantity per Row 25 = 25

版權屬於群創所有, 禁止任何未經授權的使用
The copyright belongs to InnoLux. Any unauthorized use is prohibited.

8.3 Packaging Drawing

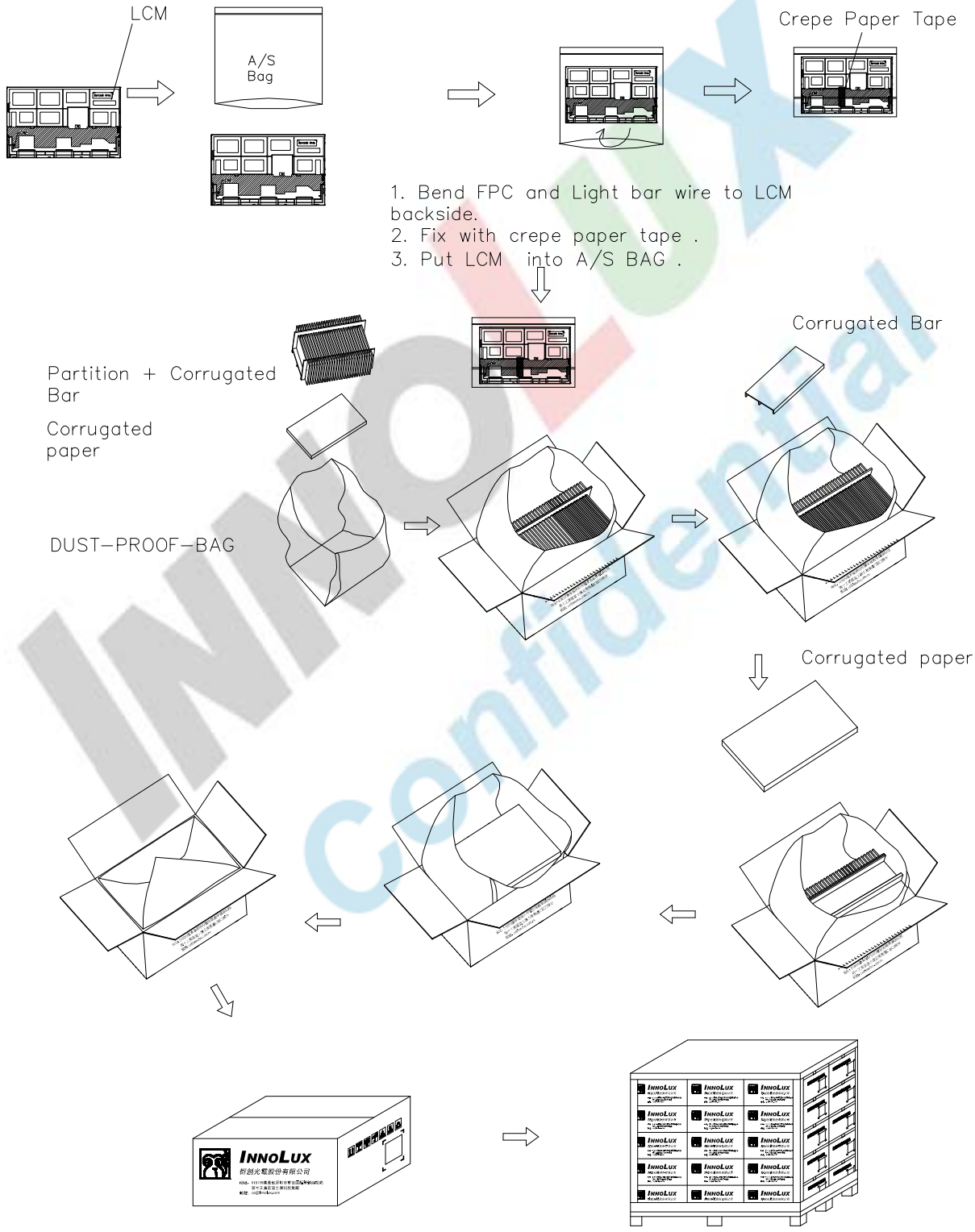

版權屬於群創所有，禁止任何未經授權的使用
The copyright belongs to InnoLux. Any unauthorized use is prohibited.