Version:02

InnoLux copyright
All rights reserved,
Copying forbidden.

Record of Revision

Version	Revise Date	Page	Content
01	2007-04-03	All	Initial release
02	2007-06-21	12	Update the Lamp staring voltage
		14	Update the Color chromaticity
		21-22	Update the ME Drawing

Contents:

A. General Specification	
B. Electrical Specifications	
1. Pin assignment	
2. Absolute maximum ratings	
3. Electrical characteristics	
a. Typical operating conditions	
b. Display color vs. input data signals	
c. Input signal timing	
d. Display position	
e. Backlight driving conditions	
C. Optical specifications	
D. Reliability test items	
E. Safety	
F. Display quality	
G. Handling precaution	
H. Label	
I. Mechanical drawings	
Appendix	

ALL RIGHTS RESERVED ANY PORTION OF THIS DOCUMENT SHALL NOT BE REPRODUCED, COPIED, OR TRANSFORMED TO ANY OTHER FORMS WITHOUT PRIOR WRITTEN PERMISSION FROM INNOLUX DISPLAY CORPORATION.

A. General Specification

NO.	Item	Specification	Remark
1	Display resolution (pixel)	1,680(H) X R.G.B X 1,050(V), WSXGA+ resolution	
2	Active area (mm)	473.76(H) X 296.1(V)	
3	Screen size (inch)	22 inches diagonal	
4	Pixel pitch (mm)	0.282(H) X 0.282(V)	
5	Color configuration	R, G, B vertical stripe	
6	Overall dimension (mm)	493.7 (W) X 320.1 (H) X 16.5 (D) (typ.)	
7	Weight (g)	2,900 (max.)	
8	Surface treatment	Anti-glare, Haze = 25%, Hard coating (3H)	
9	Input color signal	8 bit LVDS	
10	Display colors	16.7 M (6 bit with Hi-FRC)	
11	Optimum viewing direction	6 o'clock	
12	Backlight	4 CCFL	
13	RoHS	RoHS compliance	

ALL RIGHTS RESERVED ANY PORTION OF THIS DOCUMENT SHALL NOT BE REPRODUCED, COPIED, OR TRANSFORMED TO ANY OTHER FORMS WITHOUT PRIOR WRITTEN PERMISSION FROM INNOLUX DISPLAY CORPORATION.

B. Electrical Specifications

1.Pin assignment

Connector

JAE FI-XB30SSRL-HF16, Foxconn GS23302-0311R-7F or mechanical interface equivalent connector.

Pin No.	Symbol	Description
Frame	VSS	Ground
1	RXinO0-	-LVDS differential data input, Chan 0-Odd
2	RXinO0+	+LVDS differential data input, Chan 0-Odd
3	RXinO1-	-LVDS differential data input, Chan 1-Odd
4	RXinO1+	+LVDS differential data input, Chan 1-Odd
5	RXinO2-	-LVDS differential data input, Chan 2-Odd
6	RXinO2+	+LVDS differential data input, Chan 2-Odd
7	VSS	Ground
8	RXOC-	-LVDS differential Clock input (Odd)
9	RXOC+	+LVDS differential Clock input (Odd)
10	RXinO3-	-LVDS differential data input, Chan 3-Odd
11	RXinO3+	+LVDS differential data input, Chan 3-Odd
12	RXinE0-	-LVDS differential data input, Chan 0-Even
13	RXinE0+	+LVDS differential data input, Chan 0-Even
14	VSS	Ground
15	RXinE1-	-LVDS differential data input, Chan 1-Even
16	RXinE1+	+LVDS differential data input, Chan 1-Even
17	VSS	Ground
18	RXinE2-	-LVDS differential data input, Chan 2-Even
19	RXinE2+	+LVDS differential data input, Chan 2-Even
20	RXEC-	-LVDS differential Clock input (Even)
21	RXEC+	+LVDS differential Clock input (Even)
22	RXinE3-	-LVDS differential data input, Chan 3-Even
23	RXinE3+	+LVDS differential data input, Chan 3-Even
24	VSS	Ground
25	VSS	Ground
26	NC	No Connection
27	VSS	Ground
28	VCC	+5.0V power supply
29	VCC	+5.0V power supply
30	VCC	+5.0V power supply
Frame	VSS	Ground

ALL RIGHTS RESERVED ANY PORTION OF THIS DOCUMENT SHALL NOT BE REPRODUCED, COPIED, OR TRANSFORMED TO ANY OTHER FORMS WITHOUT PRIOR WRITTEN PERMISSION FROM INNOLUX DISPLAY CORPORATION.

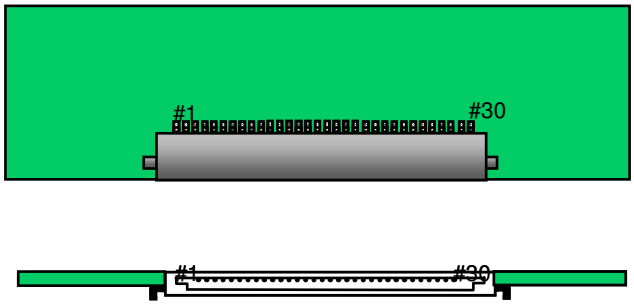

Rear view of LCM

2. Absolute maximum ratings

Parameter	Symbol	Values		Unit	Remark
		Min.	Max.		
Power voltage	V_{cc}	-0.3	6	V	At 25℃
Input signal voltage	V_{LH}	-0.3	4.3	V	At 25℃
Operating temperature	Top	0	50	℃	Note 1
Storage temperature	T_{ST}	- 25	60	℃	Note 2
CCFL Current	ICFL	3	8	[mA]	

Note 1: The relative humidity must not exceed 90% non-condensing at temperatures of 40℃ or less. At temperatures greater than 40℃, the wet bulb temperature must not exceed 39℃.

Note 2: The unit should not be exposed to corrosive chemicals.

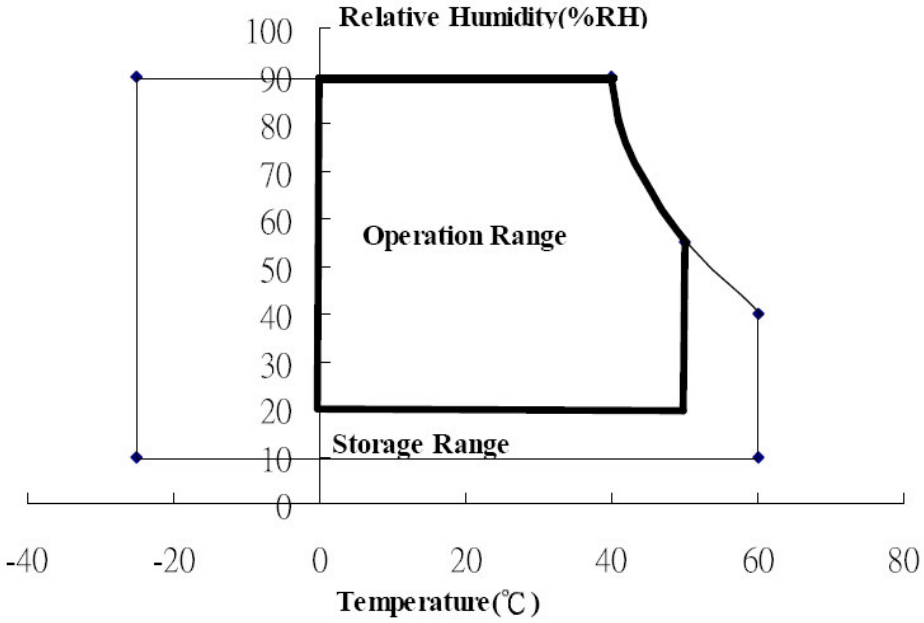

ALL RIGHTS RESERVED ANY PORTION OF THIS DOCUMENT SHALL NOT BE REPRODUCED, COPIED, OR TRANSFORMED TO ANY OTHER FORMS WITHOUT PRIOR WRITTEN PERMISSION FROM INNOLUX DISPLAY CORPORATION.

3. Electrical characteristics

a. Typical operating conditions

Item		Symbol	Min.	Typ.	Max.	Unit	Remark
Input Voltage		V_{cc}	4.5	5	5.5	V	
Permissive Power Input Ripple		V_{RF}	-	-	0.25	V	
Input Current	Black	I_{cc}	-	900	-	mA	Note 1
	White	I_{cc}	-	700	-		Note 2
	Mosaic	I_{cc}	-	800			Note 3
Rush Current		I_{Rush}	-	-	4	A	Note 4
Logic Input Voltage LVDS: IN+, IN-	Common Mode Voltage	VCM	-	1.2	-	V	
	Differential Input Voltage	VID	100	-	600	mV	
	Threshold Voltage (High)	VTH	-	-	100	mV	Note 5
	Threshold Voltage (Low)	VTL	-100	-	-	mV	Note 5

Note 1 : The specified current is under the V_{cc} =5V, 25℃, fv=60Hz (frame frequency) condition whereas black pattern is displayed.

Note 2 : The specified current is under the Vcc =5V, 25°C, fv=60Hz (frame frequency) condition whereas white pattern is displayed.

Note 3 : The specified current is under the Vcc =5V, 25°C, fv=60Hz (frame frequency) condition whereas mosaic pattern(black & white [8*6]) is displayed.

White : 255 Gray

Black : 0 Gray

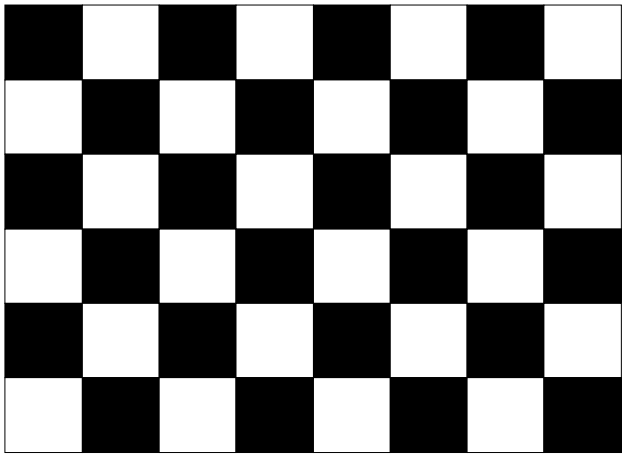

ALL RIGHTS RESERVED ANY PORTION OF THIS DOCUMENT SHALL NOT BE REPRODUCED, COPIED, OR TRANSFORMED TO ANY OTHER FORMS WITHOUT PRIOR WRITTEN PERMISSION FROM INNOLUX DISPLAY CORPORATION.

Note 4 : test condition :

(1) V_{DD} = 5 V, V_{DD} rising time = 470 μs ± 10%

(2) Pattern: Mosaic pattern

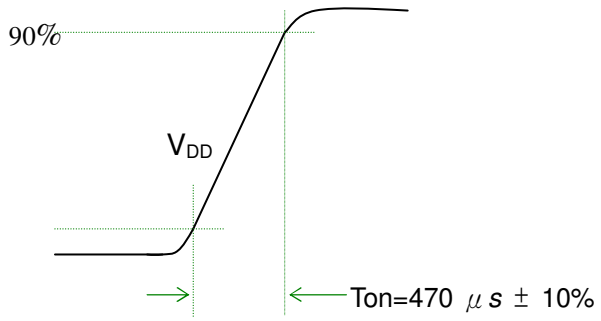

(3) Test circuit

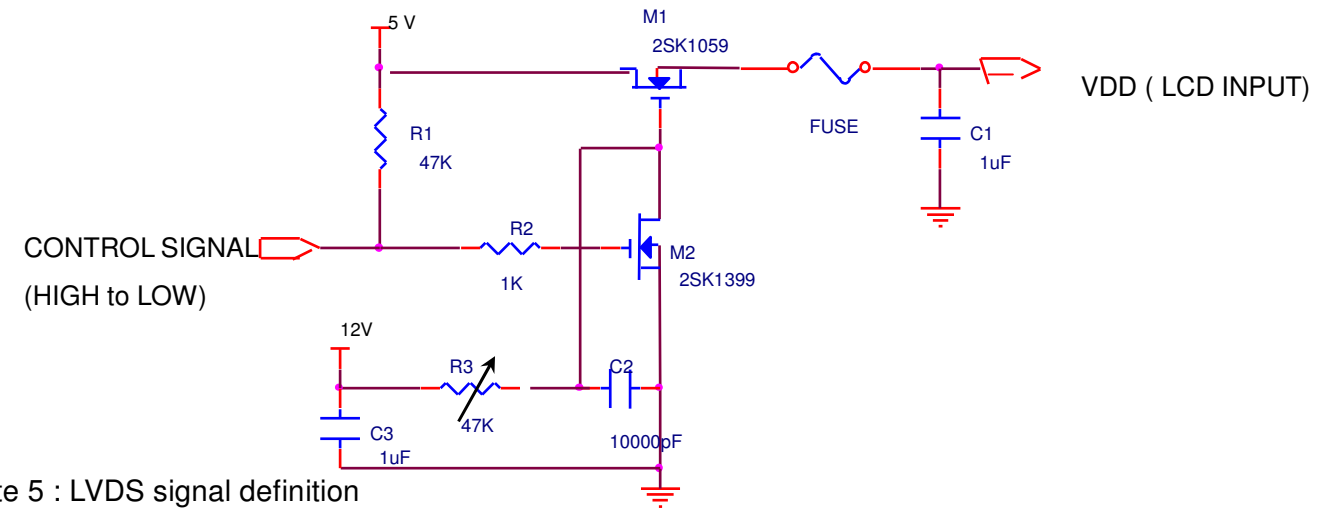

Note 5 : LVDS signal definition

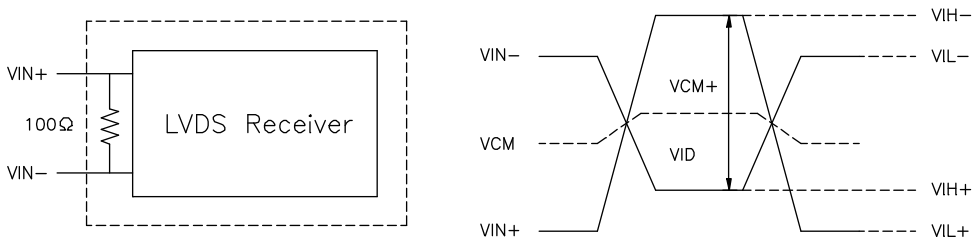

VIN_+ = Positive differential DATA & CLK Input

VIN- = Negative differential DATA & CLK Input

VID = VIN_+ – VIN- ,

ΔVCM = | VCM_+–VCM- | ,

ΔVID = | VID_+–VID- | ,

VID+ = | VIH_+–VIH- | ,

VID- = | VIL_+–VIL- | ,

VCM = (VIN_+ +VIN-)/2,

VCM+ = (VIH_+ +VIH-)/2,

VCM- = (VIL_+ +VIL-)/2,

ALL RIGHTS RESERVED ANY PORTION OF THIS DOCUMENT SHALL NOT BE REPRODUCED, COPIED, OR TRANSFORMED TO ANY OTHER FORMS WITHOUT PRIOR WRITTEN PERMISSION FROM INNOLUX DISPLAY CORPORATION.

Note 6 : Power on sequence for LCD V_{DD}

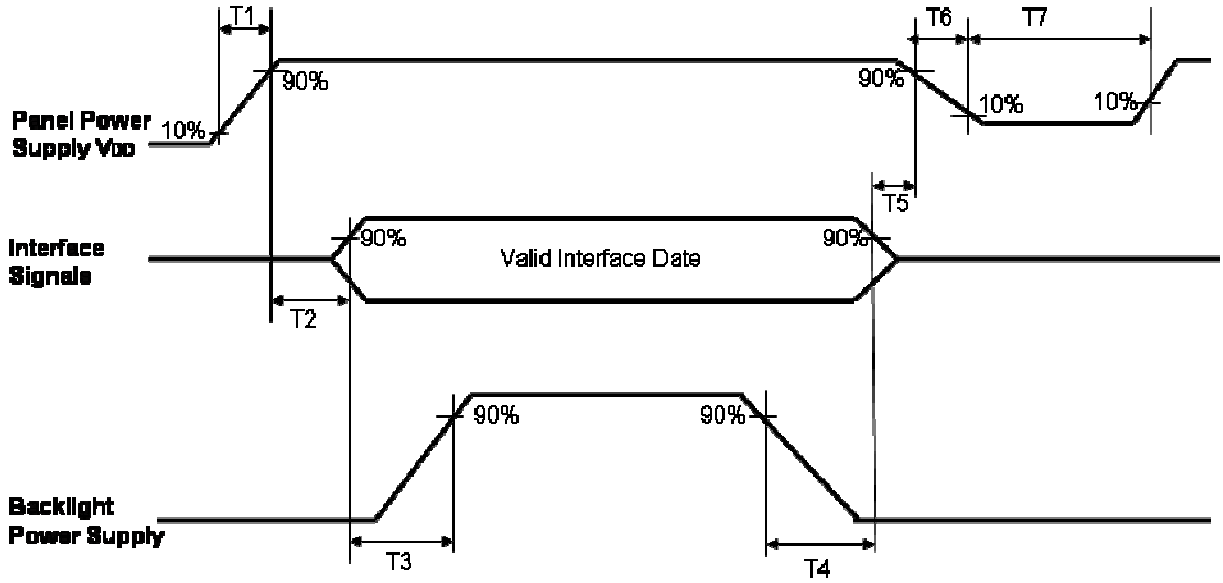

Parameter	Value			Unit
	Min.	Typ.	Max.	ms
T1	0.1	--	10	ms
T2	0	--	50	ms
T3	200	250	--	ms
T4	100	250	--	ms
T5	0	20	50	ms
T6	0.1	--	--	ms
T7	1000	--	--	ms

ALL RIGHTS RESERVED ANY PORTION OF THIS DOCUMENT SHALL NOT BE REPRODUCED, COPIED, OR TRANSFORMED TO ANY OTHER FORMS WITHOUT PRIOR WRITTEN PERMISSION FROM INNOLUX DISPLAY CORPORATION.

b. Display color vs. input data signals

The brightness of each primary color (red, green and blue) is based on the 8-bit gray scale data input for the color; the higher the binary input, the brighter the color. The table below provides a reference for color versus data input.

Color		Input color data																							
		Red								Green								Blue							
		MSB							LSB	MSB							LSB	MSB							LSB
		R7	R6	R5	R4	R3	R2	R1	R0	G7	G6	G5	G4	G3	G2	G1	G0	B7	B6	B5	B4	B3	B2	B1	B0
Basic colors	Black	0	0	0	0	0	0	0	0	0	0	0	0	0	0	0	0	0	0	0	0	0	0	0	0
	Red(255)	1	1	1	1	1	1	1	1	0	0	0	0	0	0	0	0	0	0	0	0	0	0	0	0
	Green(255)	0	0	0	0	0	0	0	0	1	1	1	1	1	1	1	1	0	0	0	0	0	0	0	0
	Blue(255)	0	0	0	0	0	0	0	0	0	0	0	0	0	0	0	0	1	1	1	1	1	1	1	1
	Cyan	0	0	0	0	0	0	0	0	1	1	1	1	1	1	1	1	1	1	1	1	1	1	1	1
	Magenta	1	1	1	1	1	1	1	1	0	0	0	0	0	0	0	0	1	1	1	1	1	1	1	1
	Yellow	1	1	1	1	1	1	1	1	1	1	1	1	1	1	1	1	0	0	0	0	0	0	0	0
	White	1	1	1	1	1	1	1	1	1	1	1	1	1	1	1	1	1	1	1	1	1	1	1	1
Red	Red(000) dark	0	0	0	0	0	0	0	0	0	0	0	0	0	0	0	0	0	0	0	0	0	0	0	0
	Red(001)	0	0	0	0	0	0	0	1	0	0	0	0	0	0	0	0	0	0	0	0	0	0	0	0
	Red(002)	0	0	0	0	0	0	1	0	0	0	0	0	0	0	0	0	0	0	0	0	0	0	0	0
	:	:	:	:	:	:	:	:	:	:	:	:	:	:	:	:	:	:	:	:	:	:	:	:	:
	Red(253)	1	1	1	1	1	1	0	1	0	0	0	0	0	0	0	0	0	0	0	0	0	0	0	0
	Red(254)	1	1	1	1	1	1	1	0	0	0	0	0	0	0	0	0	0	0	0	0	0	0	0	0
	Red(255) bright	1	1	1	1	1	1	1	1	0	0	0	0	0	0	0	0	0	0	0	0	0	0	0	0
Green	Green(000)dark	0	0	0	0	0	0	0	0	0	0	0	0	0	0	0	0	0	0	0	0	0	0	0	0
	Green(001)	0	0	0	0	0	0	0	0	0	0	0	0	0	0	0	1	0	0	0	0	0	0	0	0
	Green(002)	0	0	0	0	0	0	0	0	0	0	0	0	0	0	1	0	0	0	0	0	0	0	0	0
	:	:	:	:	:	:	:	:	:	:	:	:	:	:	:	:	:	:	:	:	:	:	:	:	:
	Green(253)	0	0	0	0	0	0	0	0	1	1	1	1	1	1	0	1	0	0	0	0	0	0	0	0
	Green(254)	0	0	0	0	0	0	0	0	1	1	1	1	1	1	1	0	0	0	0	0	0	0	0	0
	Green(255)bright	0	0	0	0	0	0	0	0	1	1	1	1	1	1	1	1	0	0	0	0	0	0	0	0
Blue	Blue(000) dark	0	0	0	0	0	0	0	0	0	0	0	0	0	0	0	0	0	0	0	0	0	0	0	0
	Blue(001)	0	0	0	0	0	0	0	0	0	0	0	0	0	0	0	0	0	0	0	0	0	0	0	1
	Blue(002)	0	0	0	0	0	0	0	0	0	0	0	0	0	0	0	0	0	0	0	0	0	0	1	0
	:	:	:	:	:	:	:	:	:	:	:	:	:	:	:	:	:	:	:	:	:	:	:	:	:
	Blue(253)	0	0	0	0	0	0	0	0	0	0	0	0	0	0	0	0	1	1	1	1	1	1	0	1
	Blue(254)	0	0	0	0	0	0	0	0	0	0	0	0	0	0	0	0	1	1	1	1	1	1	1	0
	Blue(255) bright	0	0	0	0	0	0	0	0	0	0	0	0	0	0	0	0	1	1	1	1	1	1	1	1

ALL RIGHTS RESERVED ANY PORTION OF THIS DOCUMENT SHALL NOT BE REPRODUCED, COPIED, OR TRANSFORMED TO ANY OTHER FORMS WITHOUT PRIOR WRITTEN PERMISSION FROM INNOLUX DISPLAY CORPORATION.

c. Input signal timing

Support Input Timing Table

The input signal timing specifications are shown as the following table and timing diagram.

Signal	Item	Description	Min.	Typ.	Max.	Unit
Clock	Dclk	period	12.2	16.8	17.9	nS
		frequency	56	59.6	82	MHz
Vertical	T_{V_TOTAL}	V total line number	1059	1080	1100	T_H
	T_{V_DATA}	Data duration	1050	1050	1050	T_H
	T_{VB}	V-blank	9	30	50	T_H
	f_V	frequency	56	60	76	Hz
Horizontal	T_{H_TOTAL}	H total pixel number	890	920	1004	DClk
	T_{H_DATA}	Data duration	840	840	840	DClk
	T_{HB}	H-blank	73	80	164	DClk

Note: Because this module is operated by DE only mode, Hsync and Vsync input signals should be set to low logic level or ground. Otherwise, this module would operate abnormally.

INPUT SIGNAL TIMING DIAGRAM

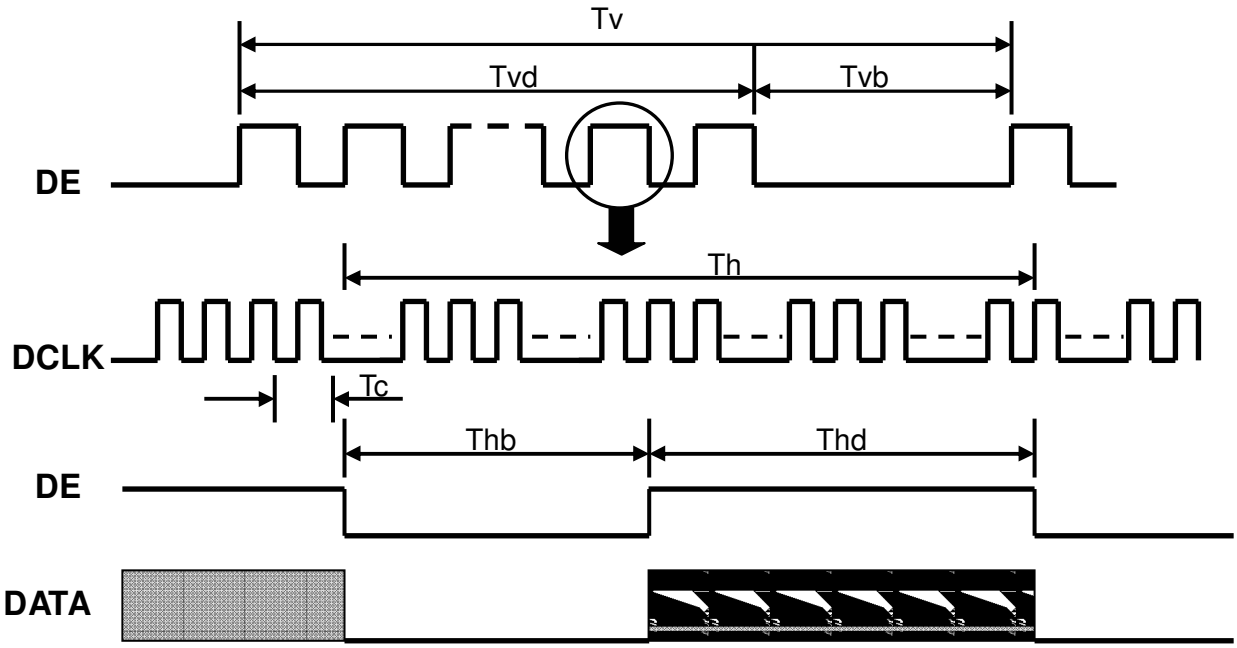

ALL RIGHTS RESERVED ANY PORTION OF THIS DOCUMENT SHALL NOT BE REPRODUCED, COPIED, OR TRANSFORMED TO ANY OTHER FORMS WITHOUT PRIOR WRITTEN PERMISSION FROM INNOLUX DISPLAY CORPORATION.

d. Display Position

D(1, 1)	D(2, 1)	……	D(840, 1)	……	D(1679, 1)	D(1680, 1)
D(1, 2)	D(2, 2)	……	D(840, 2)	……	D(1679, 2)	D(1680, 2)
⋮		……	⋮	……	⋮	⋮
D(1, 525)	D(2, 525)	……	D(840, 525)	……	D(1679, 525)	D(1680, 525)
⋮		……	⋮	……	⋮	⋮
D(1, 1049)	D(2, 1049)	……	D(840, 1049)	……	D(1679, 1049)	D(1680, 1049)
D(1, 1050)	D(2,1050)	……	D(840, 1050)	……	D(1679,1050)	D(1680, 1050)

e. Backlight driving conditions

Parameter	Symbol	Min.	Typ.	Max.	Unit	Remark	Remark
Lamp voltage	VL	720(7mA)	800(7mA)	880(7mA)	Vrms	--	--
Lamp operation current	IL	3	7	8	mArms	--	Note 1
Lamp starting voltage	VLstart	--	--	1650	Vrms	T = 25°C	Note 2,3,4,5
		--	--	1850		T = 0°C	Note 2,3,4,5
Frequency	F	40	50	60	KHZ	--	Note 5
Lamp life time	--	40000	--	--	Hr	--	Note 6

Note: The waveform of the voltage output of inverter must be area-symmetric and the design of the inverter must have specifications for the modularized lamp. The performance of the Backlight, such as lifetime or brightness, is greatly influenced by the characteristics of the DC-AC inverter for the lamp. All the parameters of an inverter should be carefully designed to avoid producing too much current leakage from high voltage output of the inverter. When designing or ordering the inverter please make sure that a poor lighting caused by the mismatch of the Backlight and the inverter (miss-lighting, flicker, etc.) never occurs. If the above situation is confirmed, the module should be operated in the same manners when it is installed in your instrument.

Note 1 :

The degree of unbalance: less than 10%

The ratio of wave height: less than $\sqrt{2} \pm 10\%$

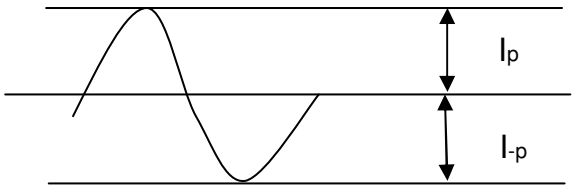

I_p: high side peak

I_{-p}: low side peak

The degree of unbalance = $|I_p - I_{-p}| / I_{rms} * 100(\%)$

The ratio of wave height = I_p(or I_{-p})/I_{rms}

Lamp should be completely turned on.

ALL RIGHTS RESERVED ANY PORTION OF THIS DOCUMENT SHALL NOT BE REPRODUCED, COPIED, OR TRANSFORMED TO ANY OTHER FORMS WITHOUT PRIOR WRITTEN PERMISSION FROM INNOLUX DISPLAY CORPORATION.

Note 2: Test equipment: AS-114B
Inverter Model: Delta INV-12B001 A5 00A

Note 3: The voltage shown above should be applied to the lamp for more than 1 second after startup. Otherwise, the lamp may not be turned on normally.

Note 4: Inverter should provide more than min. value, and then lamp could be completely turned on.

Note 5: Lamp frequency may produce interference with horizontal synchronous frequency and this may cause line flow on the display. Therefore lamp frequency shall be detached from the horizontal synchronous frequency and its harmonics as far as possible in order to avoid interference.

Note 6: Lamp life definition: The brightness of lamp becomes 50% of the initial brightness or not normal lighting.

Backlight connector : 35001HS-02L

Pin no.	Symbol	Function	Remark
1	VIH	Lamp high voltage input	Cable color: Pink
2	VIL	Lamp low voltage input	Cable color: White
3	VIH	Lamp high voltage input	Cable color: Blue
4	VIL	Lamp low voltage input	Cable color: Black

ALL RIGHTS RESERVED ANY PORTION OF THIS DOCUMENT SHALL NOT BE REPRODUCED, COPIED, OR TRANSFORMED TO ANY OTHER FORMS WITHOUT PRIOR WRITTEN PERMISSION FROM INNOLUX DISPLAY CORPORATION.

C. Optical Specifications

Item	Symbol	Condition	Specification			Unit	Remark
			Min.	Typ.	Max.		
Response time	Tr	$\theta = 0^\circ$		1.5	3	ms	Note 4
	Tf			3.5	7		
	Tr+Tf			5	10		
Contrast ratio	CR	θ= 0°	700	1000			Note 3,5
Viewing angle	Top	CR≧10	70	80		deg.	Note 3,5,7
		CR≧5	75	85			
	Bottom	CR≧10	70	80			
		CR≧5	75	85			
	Left	CR≧10	75	85			
		CR≧5	80	89			
	Right	CR≧10	75	85			
		CR≧5	80	89			
Brightness (Center)	YL		250	300		nit	Note 3,6
Color chromaticity(CIE)	Wx	$\theta = 0^\circ$	-0.03	0.313	+0.03		Note 3
	Wy			0.329			
	Rx			0.640			
	Ry			0.349			
	Gx			0.284			
	Gy			0.617			
	Bx			0.142			
	By			0.067			
White uniformity (9 points)	δw		0.75	0.80			Note 3,8
Cross talk	Ct				2%		Note 9

Note 1: Ambient temperature = 25℃.

Note 2: To be measured in dark room after backlight warm up 30 minutes.

Note 3: To be measured with a viewing cone of 2°by Topcon luminance meter BM-5A.

Note 4: Definition of response time: The output signals of BM-7 are measured when the input signals are changed from “Black” to “White” (falling time) and from “White” to “Black” (rising time), respectively. The response time interval is between the 10% and 90% of amplitudes. Refer to figure as below :

ALL RIGHTS RESERVED ANY PORTION OF THIS DOCUMENT SHALL NOT BE REPRODUCED, COPIED, OR TRANSFORMED TO ANY OTHER FORMS WITHOUT PRIOR WRITTEN PERMISSION FROM INNOLUX DISPLAY CORPORATION.

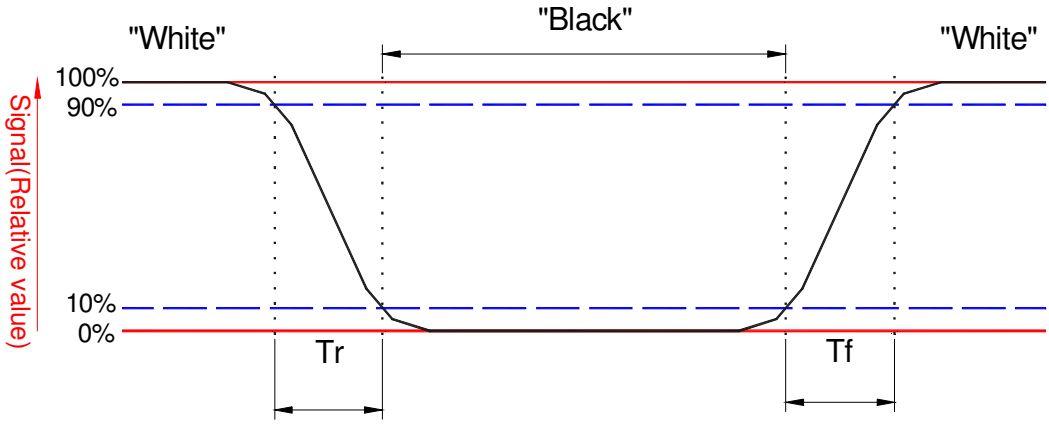

Note 5: Definition of contrast ratio:

Contrast ratio is calculated by the following formula.

$$\text{Contrast ratio (CR)} = \frac{\text{Brightness on the "white" state}}{\text{Brightness on the "black" state}}$$

Note 6: Driving conditions for CCFL: I_L= 7mA, 50 KHz Frequency.

Note 7: Definition of viewing angle.

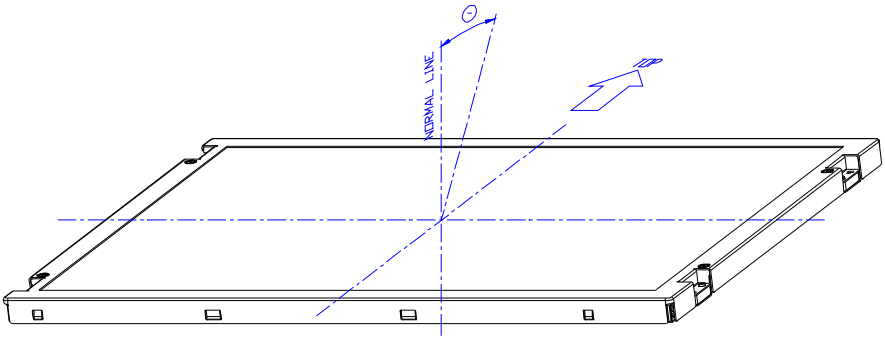

Note 8: Definition white uniformity:

Luminance are measured at the following nine points (P1~P9).

$$\delta_W = \frac{\text{Minimum Brightness of nine points (P1~P9).}}{\text{Maximum Brightness of nine points (P1~P9).}}$$

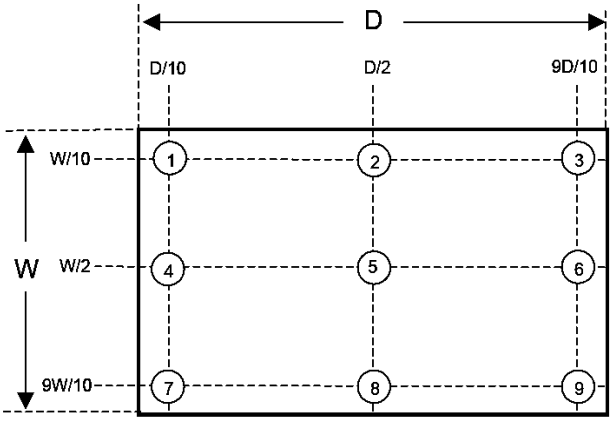

ALL RIGHTS RESERVED ANY PORTION OF THIS DOCUMENT SHALL NOT BE REPRODUCED, COPIED, OR TRANSFORMED TO ANY OTHER FORMS WITHOUT PRIOR WRITTEN PERMISSION FROM INNOLUX DISPLAY CORPORATION.

Note 9:

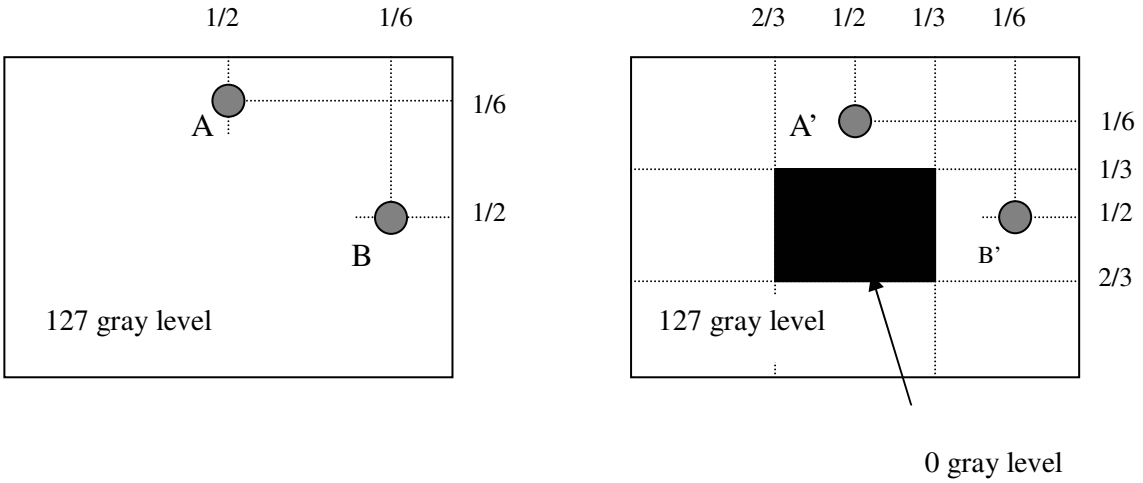

$| L_A - L_{A'} | / L_A \times 100\% = 2\%$ max., L_A and $L_{A'}$ are brightness at location A and A'

$| L_B - L_{B'} | / L_B \times 100\% = 2\%$ max., L_B and $L_{B'}$ are brightness at location B and B'

Note 10: Optical characteristic measurement setup.

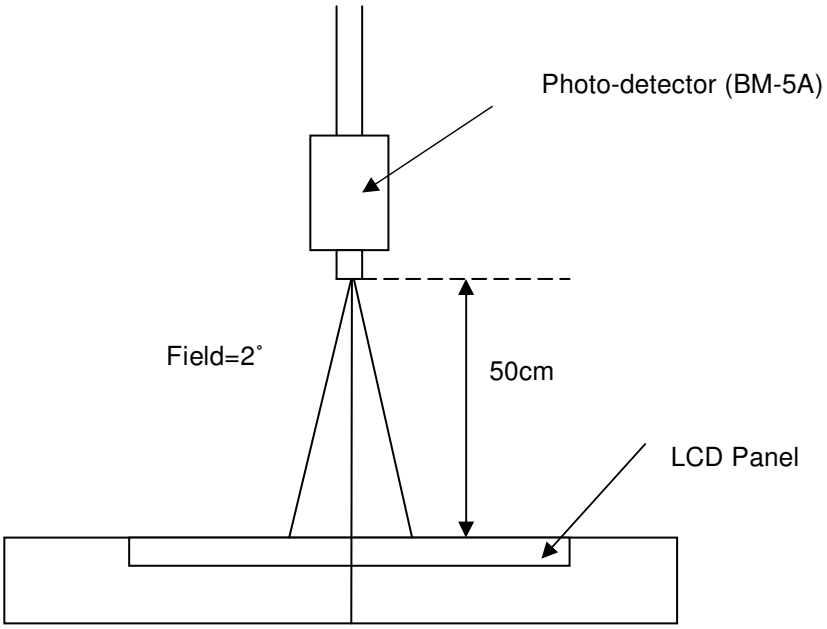

ALL RIGHTS RESERVED ANY PORTION OF THIS DOCUMENT SHALL NOT BE REPRODUCED, COPIED, OR TRANSFORMED TO ANY OTHER FORMS WITHOUT PRIOR WRITTEN PERMISSION FROM INNOLUX DISPLAY CORPORATION.

D. Reliability test items

Test Item	Test Condition	Judgment	Remark
High temperature storage	60℃, 240Hrs	Note 1	Note 2
Low temperature storage	-25℃, 240Hrs	Note 1	Note 2
High temperature & high humidity operation	40℃, 90%RH, 240Hrs (No condensation)	Note 1	Note 2
High temperature operation	50℃, 240Hrs	Note 1	Note 2
Low temperature operation	0℃, 240Hrs	Note 1	Note 2
Thermal Shock (non-operation)	-20℃~60℃ 1Hr, 10mins, 1Hr, 100cycles	Note 1	Note 2
Electrostatic discharge (ESD) (non-operation)	Contact:+/-8kV, 150pF(330ohms), 25 times/1 point, 1 time/1 sec Air discharge:+/-15kV, 150pF(330ohms), 25 times/1 point, 1 time/1 sec	Note 1	Note 2
Vibration (non-operation)	Vibration level : 1.5G Bandwidth : 10-300Hz Waveform : sine wave, sweep rate : 10min 30 min for each direction X, Y, Z (1.5 Hrs in total)	Note 1	Note 2
Mechanical Shock (non-operation)	Shock level : 50G, 11ms Waveform : Half sine wave Direction : ±X, ±Y, ±Z One time each direction	Note 1	Note 2
MTBF Demonstration	40,000 hours with confidence level 90%	Note 1	Note 3

Note1: Pass: Normal display image with no obvious non-uniformity and no line defect. Partial transformation of the module parts should be ignored.
Fail: No display image, obvious non-uniformity, or line defects.

Note2: Evaluation should be tested after storage at room temperature for one hour.

Note 3: The MTBF (exclude the CCFL) calculation is based on the assumption that the failure rate distribution meets the Exponential Model.

ALL RIGHTS RESERVED ANY PORTION OF THIS DOCUMENT SHALL NOT BE REPRODUCED, COPIED, OR TRANSFORMED TO ANY OTHER FORMS WITHOUT PRIOR WRITTEN PERMISSION FROM INNOLUX DISPLAY CORPORATION.

E. Safety

1. Sharp Edge Requirements

There will be no sharp edges or corners on the display assembly that could cause injury.

2. Materials

a. Toxicity

There will be no carcinogenic materials used anywhere in the display module. If toxic materials are used, they will be reviewed and approved by the responsible InnoLux Toxicologist.

b. Flammability

All components including electrical components that do not meet the flammability grade UL94-V1 in the module will complete the flammability rating exception approval process. The printed circuit board will be made from material rated 94-V1 or better. The actual UL flammability rating will be printed on the printed circuit board.

c. Capacitors

If any polarized capacitors are used in the display assembly, provisions will be made to keep them from being inserted backwards.

F. Display quality

The display quality of the color TFT-LCD module should be in compliance with the Innolux's Incoming inspection standard.

G. Handling precaution

The Handling of the TFT-LCD should be in compliance with the Innolux's handling principle standard.

ALL RIGHTS RESERVED ANY PORTION OF THIS DOCUMENT SHALL NOT BE REPRODUCED, COPIED, OR TRANSFORMED TO ANY OTHER FORMS WITHOUT PRIOR WRITTEN PERMISSION FROM INNOLUX DISPLAY CORPORATION.

H. Label

1. Module Label

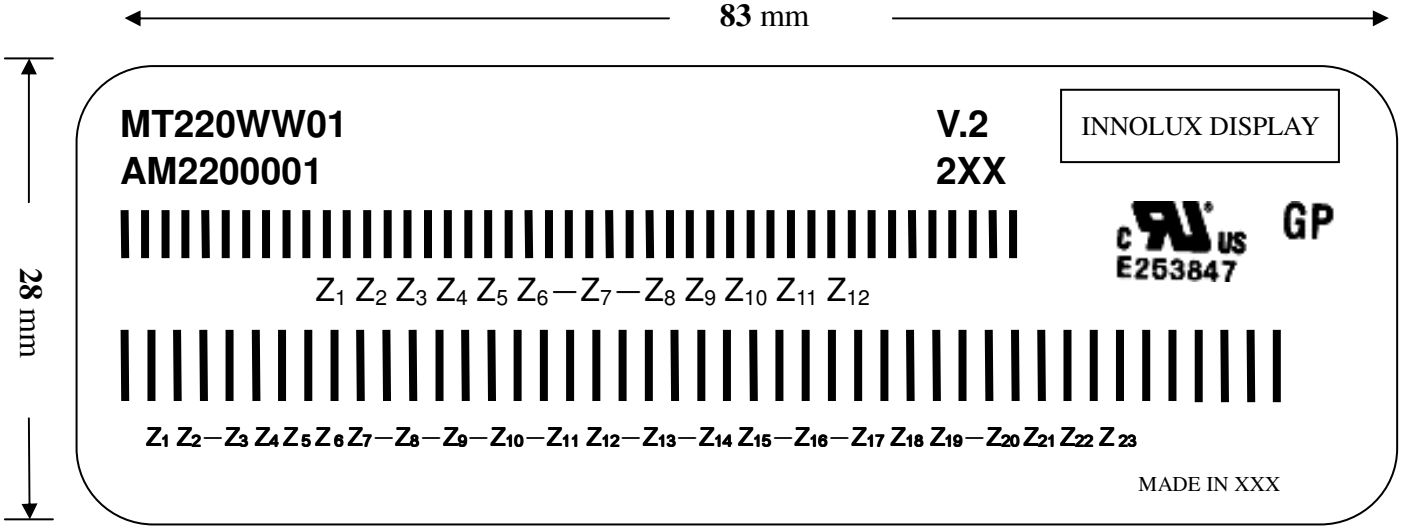

(a) Model Number: MT220WW01

(b) Version: V.2

(c) Serial ID I: Z_1 Z_2 Z_3 Z_4 Z_5 Z_6 Z_7 Z_8 Z_9 Z_{10} Z_{11} Z_{12}

- Z_8 Z_9 Z_{10} Z_{11} Z_{12} — Serial No.
- Z_7 — Code of grade
- Z_6 — INL internal use
- Z_5 — INL internal use
- Z_3 Z_4 — Year, Month, Date
- Z_1 — INL internal use

Serial ID includes the information as below:

1. Manufactured Date: Year: 0~9, for 2000~2009
2. Month: 1~9 & A~C for Jan.~Dec.
3. Date: 1~9 & A~Z (exclude I, O, Q, U) for 1th~31th
4. Code of grade: 1, 2, 3, 5, 7, E
5. Serial No.: Module manufacture sequence number.

(d) Serial ID II (INL internal use)

ALL RIGHTS RESERVED ANY PORTION OF THIS DOCUMENT SHALL NOT BE REPRODUCED, COPIED, OR TRANSFORMED TO ANY OTHER FORMS WITHOUT PRIOR WRITTEN PERMISSION FROM INNOLUX DISPLAY CORPORATION.

2. Carton Label

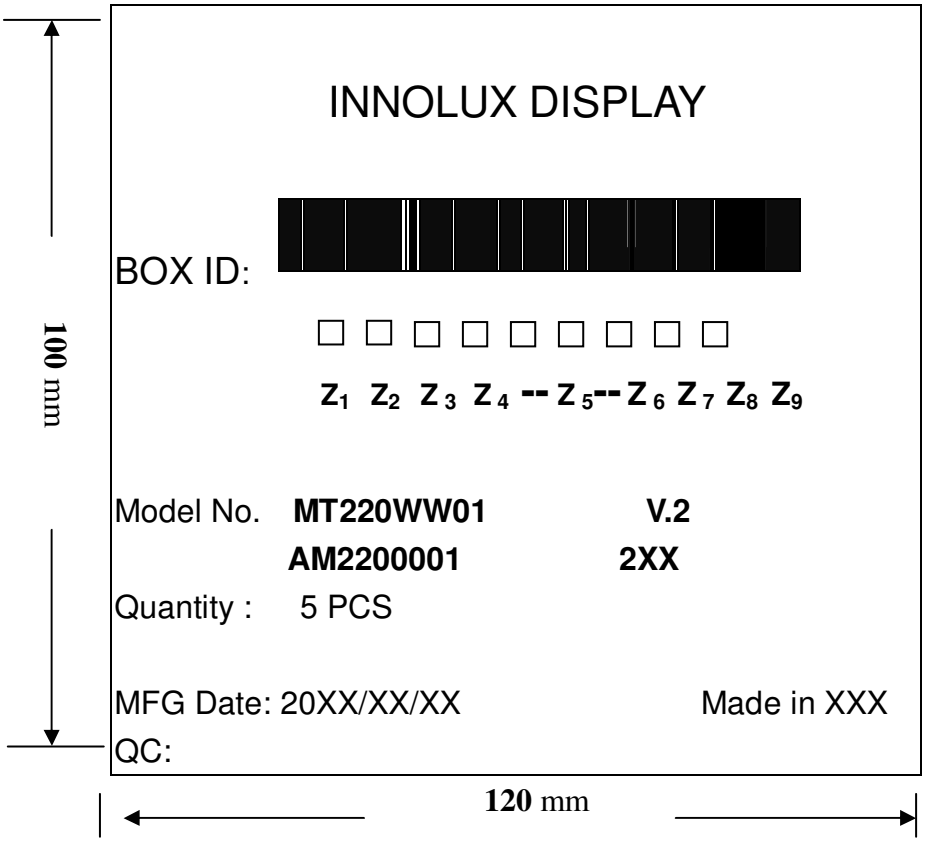

(a) Model Number: MT220WW01

(b) Version: V.2

(c) Packing quantity: 5 pcs

(d) Serial ID: Z_1 Z_2 Z_3 Z_4 Z_5 Z_6 Z_7 Z_8 Z_9

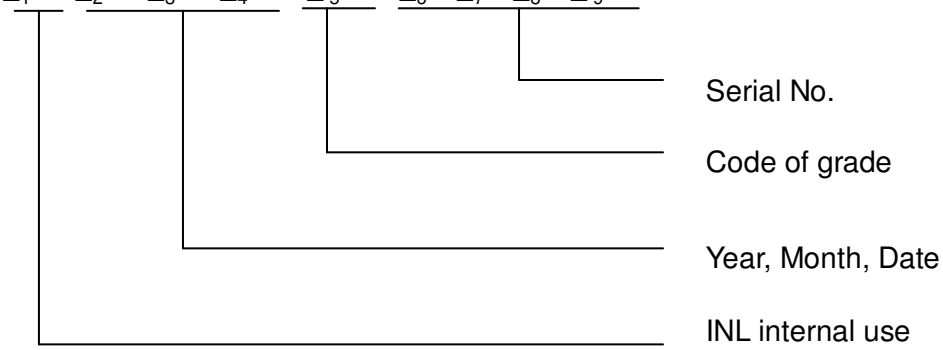

Serial ID includes the information as below :

(a) Manufactured Date: Year: 0~9, for 2000~2009

Month: 1~9 & A~C for Jan.~Dec.

Date: 1~9 & A~Z (exclude I, O, Q, U) for 1th~31th

(b) Code of grade: 1, 2, 3, 5, 7, E

(c) Serial No.: Module packing sequence number.

ALL RIGHTS RESERVED ANY PORTION OF THIS DOCUMENT SHALL NOT BE REPRODUCED, COPIED, OR TRANSFORMED TO ANY OTHER FORMS WITHOUT PRIOR WRITTEN PERMISSION FROM INNOLUX DISPLAY CORPORATION.

I.ME Drawing

1. Front View

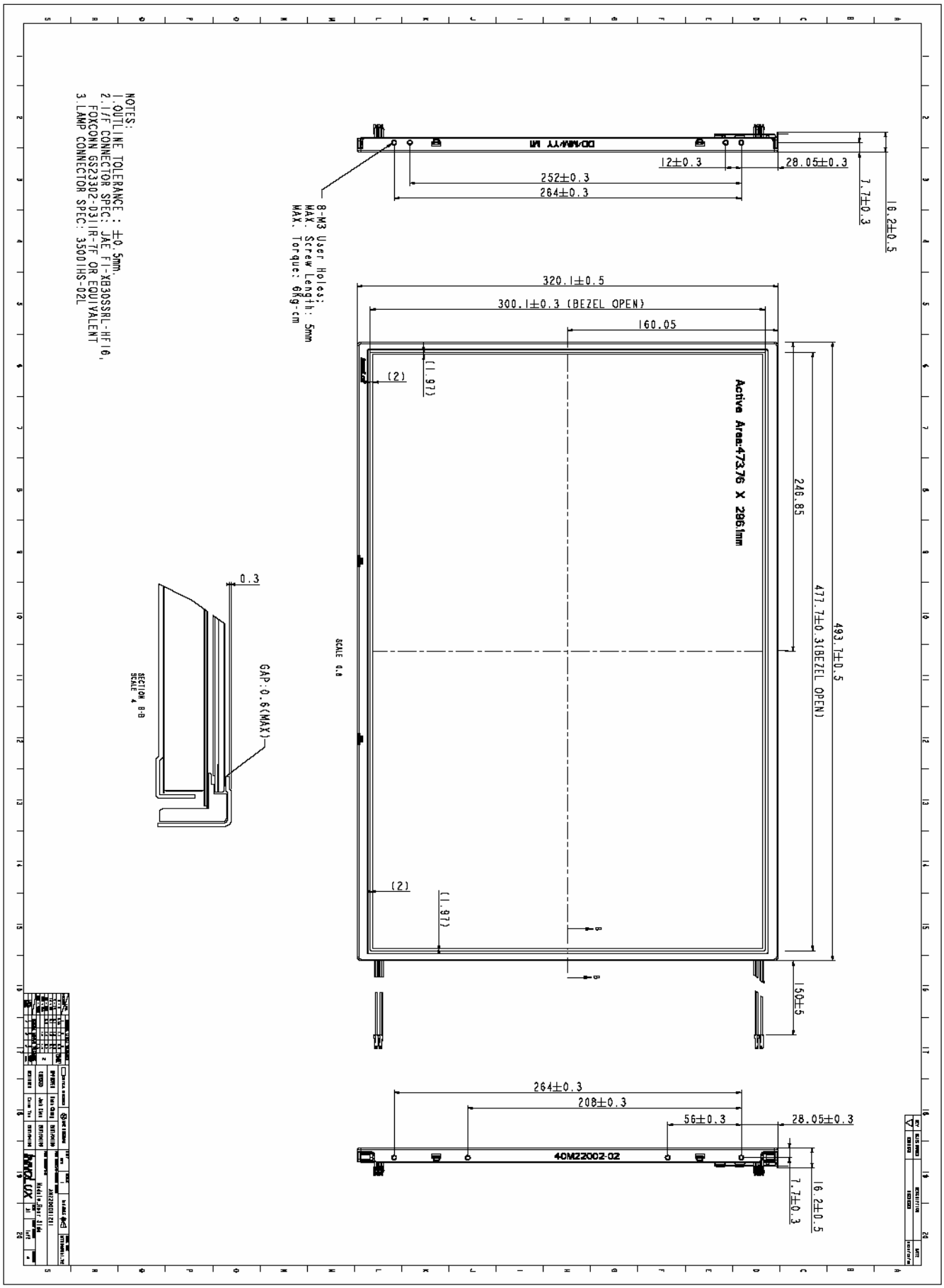

ALL RIGHTS RESERVED ANY PORTION OF THIS DOCUMENT SHALL NOT BE REPRODUCED, COPIED, OR TRANSFORMED TO ANY OTHER FORMS WITHOUT PRIOR WRITTEN PERMISSION FROM INNOLUX DISPLAY CORPORATION.

2. Back View

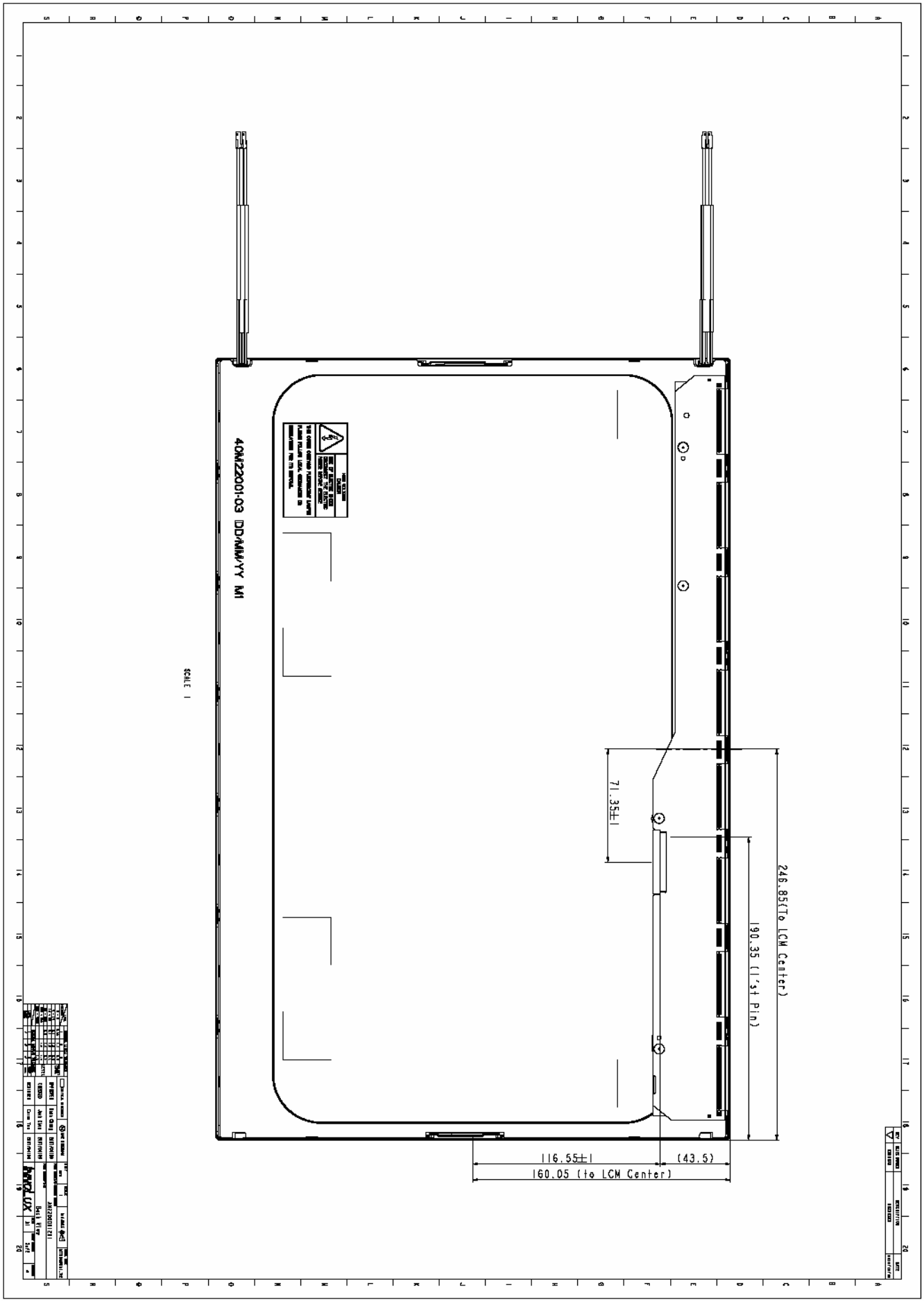

ALL RIGHTS RESERVED ANY PORTION OF THIS DOCUMENT SHALL NOT BE REPRODUCED, COPIED, OR TRANSFORMED TO ANY OTHER FORMS WITHOUT PRIOR WRITTEN PERMISSION FROM INNOLUX DISPLAY CORPORATION.