SPEC

Spec No.	TQ3C-8EAC0-E1DEB48-00
Date	May 27, 2009

TYPE : KCG047QVLAF-G040

<4.7 inch QVGA transmissive color STN
with LED backlight>

CONTENTS

1. Application
2. Construction and outline
3. Mechanical specifications
4. Absolute maximum ratings
5. Electrical characteristics
6. Optical characteristics
7. Circuit block diagram
8. Interface signals
9. Interface timing chart
10. Data and screen
11. Input timing characteristics
12. Supply voltage sequence condition
13. Backlight characteristics
14. Lot number identification
15. Warranty
16. Precautions for use
17. Reliability test data
18. Outline drawing

Issued
Date : May 29, 2009
KYOCERA
Hayato LCD Division

KYOCERA CORPORATION
KAGOSHIMA HAYATO PLANT
LCD DIVISION

This specification is subject to change without notice.
Consult Kyocera before ordering.

Original Issue Date	Designed by: Engineering dept.			Confirmed by: QA dept.	
	Prepared	Checked	Approved	Checked	Approved
May 27, 2009	Y. Asano	H. Tokumoto	Y. Matsumoto	J. Sakaguchi	

Warning

1. This Kyocera LCD module has been specifically designed for use only in electronic devices and industrial machines in the area of audio control, office automation, industrial control, home appliances, etc. The module should not be used in applications where the highest level of safety and reliability are required and module failure or malfunction of such module results in physical harm or loss of life, as well as enormous damage or loss. Such fields of applications include, without limitation, medical, aerospace, communications infrastructure, atomic energy control. Kyocera expressly disclaims any and all liability resulting in any way to the use of the module in such applications.

2. Customer agrees to indemnify, defend and hold Kyocera harmless from and against any and all actions, claims, damages, liabilities, awards, costs, and expenses, including legal expenses, resulting from or arising out of Customer's use, or sale for use, or Kyocera modules in applications.

Caution

1. Kyocera shall have the right, which Customer hereby acknowledges, to immediately scrap or destroy tooling for Kyocera modules for which no Purchase Orders have been received from the Customer in a two-year period.

Revision record

Date	Designed by : Engineering dept.			Confirmed by : QA dept.	
	Prepared	Checked	Approved	Checked	Approved

Rev.No.	Date	Page	Descriptions

1. Application

This document defines the specification of KCG047QVLAF-G040. (RoHS Compliant)

2. Construction and outline

LCD	: Transmissive color dot matrix type STN
Duty ratio	: 1/240 duty
Backlight system	: LED
Polarizer	: Glare treatment
Additional circuit	: Bias voltage circuit, Randomizing circuit, DC/DC converter circuit, Temperature compensation circuit

3. Mechanical specifications

Item	Specification	Unit
Outline dimensions *1	122.4 (W)× 90 (H) × 5.7 (D)	mm
Active area	95.98 (W) × 71.98 (H) (12.0cm / 4.7 inch (Diagonal))	mm
Effective viewing area	98 (W) × 74 (H)	mm
Dot format	320×(R,G,B) (W) × 240 (H)	dot
Dot size	0.08 (W) × 0.28 (H)	mm
Dot pitch	0.1 (W) × 0.3 (H)	mm
Base color *2	Normally Black	-
Mass	90	g

*1 Projection not included. Please refer to outline for details.

*2 Due to the characteristics of the LCD material, the color varies with environmental temperature.

4. Absolute maximum ratings

4-1. Electrical absolute maximum ratings

Item		Symbol	Min.	Max.	Unit
Supply voltage for logic		V_{DD}	0	6.0	V
Supply voltage for LCD driving		V_{CONT}	0	V_{DD}	V
Input signal voltage	*1	V_{IN}	0	V_{DD}	V
FRM frequency		f_{FRM}	-	150	Hz
LED forward current	*2	IF	-	20	mA
Reversed voltage	*2	VR	-	5	V

*1 Input signal : FRM, LOAD, CP, DISP, D0～D7
*2 For each “AN1-CA1”and “AN2-CA2”

4-2. Environmental absolute maximum ratings

Item		Symbol	Min.	Max.	Unit
Operating temperature	*1	T_{OP}	-20	70	°C
Storage temperature	*2	T_{STO}	-30	80	°C
Operating humidity	*3	H_{OP}	10	*4	%RH
Storage humidity	*3	H_{STO}	10	*4	%RH
Vibration		-	*5	*5	-
Shock		-	*6	*6	-

*1 Operating temperature means a temperature which operation shall be guaranteed. Since display performance is evaluated at 25°C, another temperature range should be confirmed.
*2 Temp. = -30°C＜48h , Temp. = 80°C＜168h
Store LCD panels at normal temperature/humidity. Keep them free from vibration and shock. An LCD panel that is kept at a low or a high temperature for a long time can be defective due to other conditions, even if the low or high temperature satisfies the standard.
(Please refer to “Precautions for Use” for details.)
*3 Non-condensing
*4 Temp.≦40°C, 85%RH Max.
Temp.＞40°C, Absolute humidity shall be less than 85%RH at 40°C.
*5

Frequency	10～55 Hz	Acceleration value (0.3～9 m/s²)
Vibration width	0.15mm	
Interval	10-55-10 Hz 1 minutes	

2 hours in each direction X, Y, Z (6 hours total)
EIAJ ED-2531
*6 Acceleration: 490 m/s², Pulse width: 11 ms
3 times in each direction: ±X, ±Y, ±Z
EIAJ ED-2531

5. Electrical characteristics

5-1. V_{DD} = 5.0V

V_{DD} = +5.0V±5%, Temp. = -20～70°C

Item	Symbol	Condition	Min.	Typ.	Max.	Unit
Supply voltage for logic	V_{DD}	-	4.75	5.00	5.25	V
Supply voltage for LCD driving *1, *2	V_{CONT}= V_{OP}	-20℃～	0.80	-	-	V
		0～50°C *3	1.30	1.80	2.30	V
		～70°C	-	-	2.80	V
Input signal voltage (FRM,LOAD,CP,DISP,D0～D7)	V_{IN}	"High" level	0.8V_{DD}	-	V_{DD}	V
		"Low" level	0	-	0.2V_{DD}	V
Input current	I_{IN}	Input signal	-100	-	100	μA
Rush current for logic	I_{RUSH}	When LCD turn on.	1.3A (Peak) × 130μs			
Clock frequency	f_{CP}	-	-	-	10.00	MHz
Frame frequency *4	f_{FRM}	-	70	75	80	Hz
Current consumption for logic	I_{DD}	*5	-	22	33	mA
Power consumption	P_{DISP}		-	110	165	mW

*1 The supply voltage (V_{CONT} = V_{OP}) to drive the display has individual difference. Please adjust the contrast to be most suitable.

*2 Frame frequency : f_{FRM} = 75Hz

*3 The LCD module has a temperature compensation circuit.

*4 In consideration of display quality, it is recommended that frame frequency be set in the range of 70-80Hz. When you have to use higher frame and clock frequencies, confirm the LCD's performance and quality prior to finalizing the frequency value. Generally, as frame and clock frequencies become higher current consumption increases and display quality will degrade.

*5 Display pattern:

V_{DD} = 5.0V, V_{CONT} = V_{OP}, f_{FRM} = 75Hz, f_{CP} = 2.16MHz, Temp. = 25°C

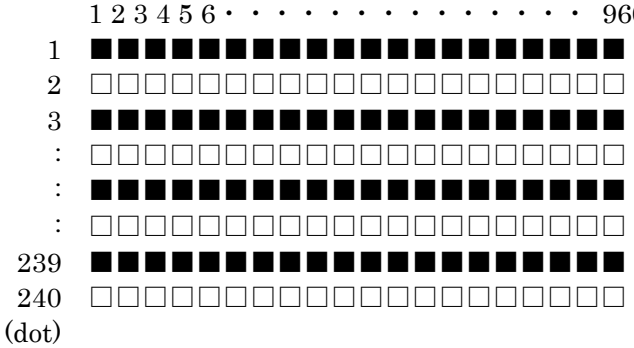

5-2. V_{DD} = 3.3V

V_{DD} =+3.3V±0.3V, Temp. = -20～70°C

Item	Symbol	Condition	Min.	Typ.	Max.	Unit
Supply voltage for logic	V_{DD}	-	3.0	3.3	3.6	V
Supply voltage for LCD driving *1, *2	V_{CONT}=V_{OP}	20℃～	0.80	-	-	V
		0～50°C *3	1.30	1.80	2.30	V
		～70°C	-	-	2.80	V
Input signal voltage (FRM,LOAD,CP,DISP,D0～D7)	V_{IN}	"High" level	0.8V_{DD}	-	V_{DD}	V
		"Low" level	0	-	0.2V_{DD}	V
Input current	I_{IN}	Input signal	-100	-	100	μA
Rush current for logic	I_{RUSH}	When LCD turn on.	1.3A (Peak) × 130μs			
Clock frequency	f_{CP}	-	-	-	10.00	MHz
Frame frequency *4	f_{FRM}	-	70	75	80	Hz
Current consumption for logic	I_{DD}	*5	-	33	50	mA
Power consumption	P_{DISP}		-	109	165	mW

*1 The supply voltage (V_{CONT} = V_{OP}) to drive the display has individual difference. Please adjust the contrast to be most suitable.

*2 Frame frequency : f_{FRM} = 75Hz

*3 The LCD module has a temperature compensation circuit.

*4 In consideration of display quality, it is recommended that frame frequency be set in the range of 70-80Hz. When you have to use higher frame and clock frequencies, confirm the LCD's performance and quality prior to finalizing the frequency value. Generally, as frame and clock frequencies become higher current consumption increases and display quality will degrade.

*5 Display pattern:

V_{DD} = 3.3V, V_{CONT} = V_{OP}, f_{FRM} = 75Hz, f_{CP} = 2.16MHz, Temp. = 25°C

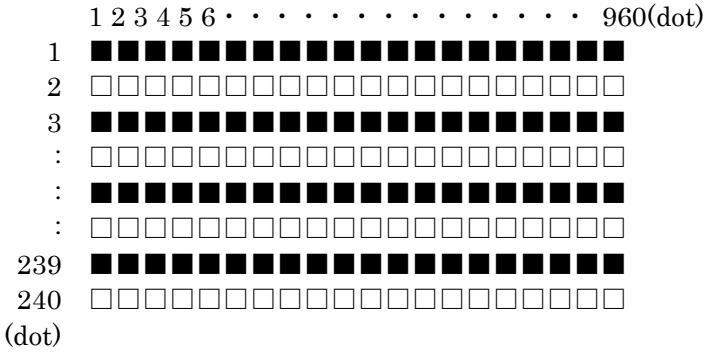

6. Optical characteristics

Measuring spot = ϕ 6.0mm, Temp. = 25°C

Item		Symbol	Condition	Min.	Typ.	Max.	Unit
Response time	Rise	τ_r	$\theta=\phi=0°$	-	250	360	ms
	Down	τ_d	$\theta=\phi=0°$	-	200	290	ms
Viewing angle range		θ UPPER	CR≧2	-	40	-	deg.
		θ LOWER		-	70	-	
		ϕ LEFT		-	50	-	deg.
		ϕ RIGHT		-	50	-	
Contrast ratio		CR	$\theta=\phi=0°$	30	60	-	-
Brightness		L	IF=10mA/Line	100	150	-	cd/m²
Chromaticity coordinates	Red	x	$\theta=\phi=0°$	0.53	0.58	0.63	-
		y		0.31	0.36	0.41	
	Green	x	$\theta=\phi=0°$	0.25	0.30	0.35	
		y		0.54	0.59	0.64	
	Blue	x	$\theta=\phi=0°$	0.09	0.14	0.19	
		y		0.04	0.09	0.14	
	White	x	$\theta=\phi=0°$	0.22	0.27	0.32	
		y		0.26	0.31	0.36	

Optimum contrast is obtained by adjusting the LCD driving voltage (V_{OP}) while at the viewing angle of $\theta=\phi=0°$.

6-1. Definition of contrast ratio

$$\text{CR(Contrast ratio)} = \frac{\text{Brightness with all pixels "White"}}{\text{Brightness with all pixels "Black"}}$$

6-2. Definition of V_{OP}

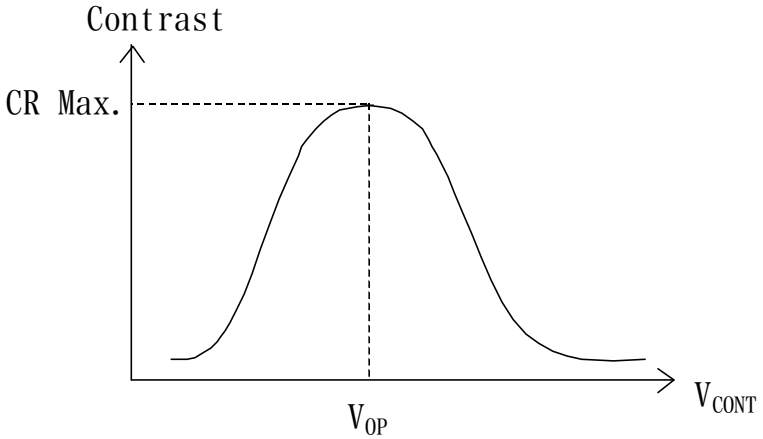

6-3. Definition of response time

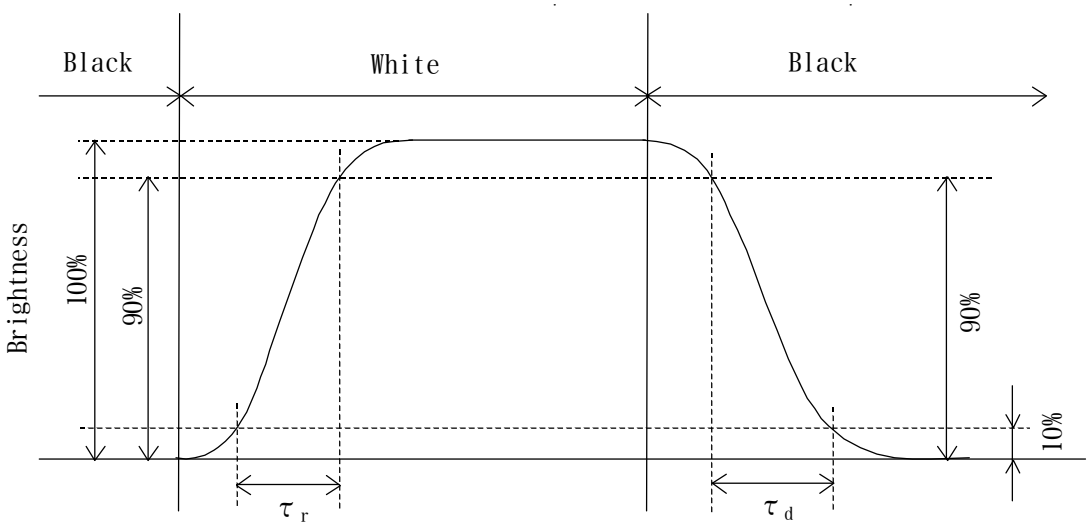

6-4. Definition of viewing angle

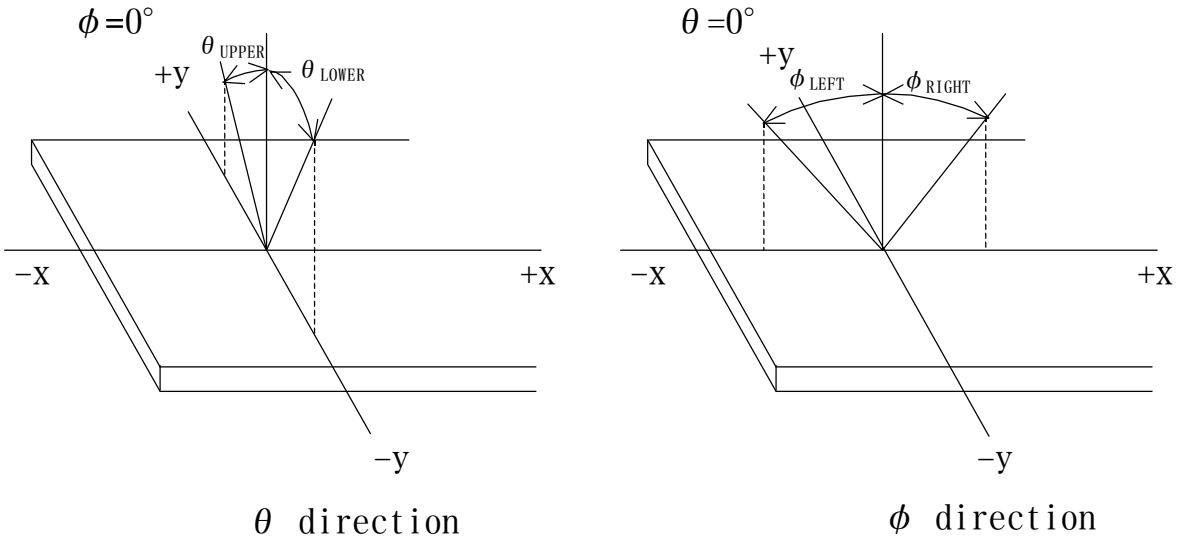

θ direction ϕ direction

6-5. Brightness measuring points

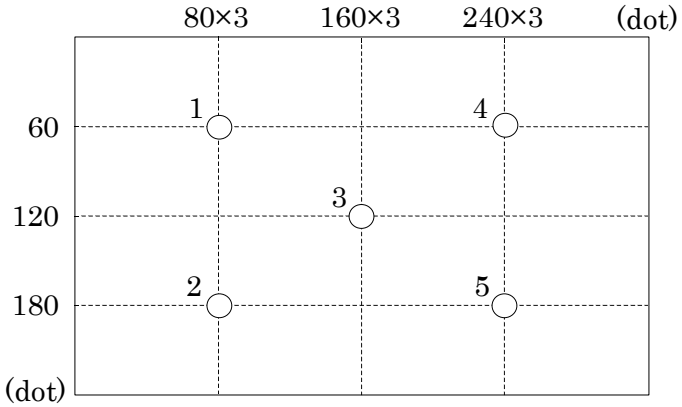

1) Rating is defined on the average in the viewing area.
2) Measured 30 minutes after the LED is powered on. (Ambient temp. = 25°C)
3) Backlight : IF=10mA / 1 LED line

7. Circuit block diagram

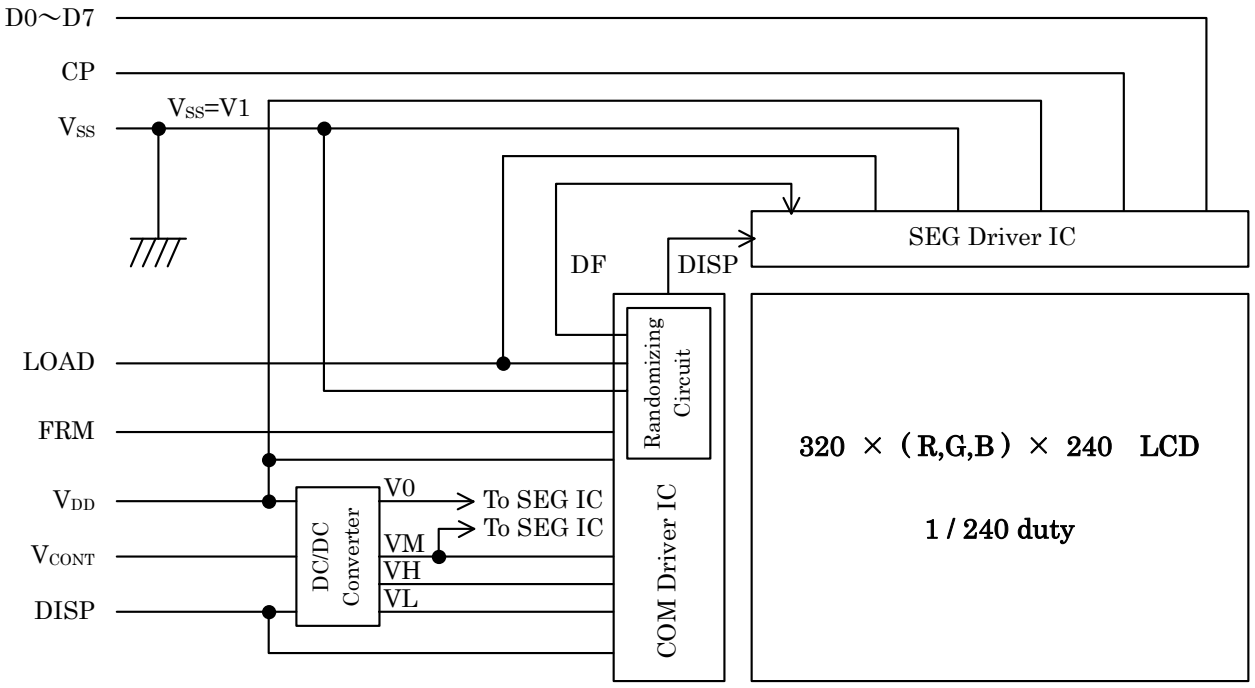

7-1. Power supply

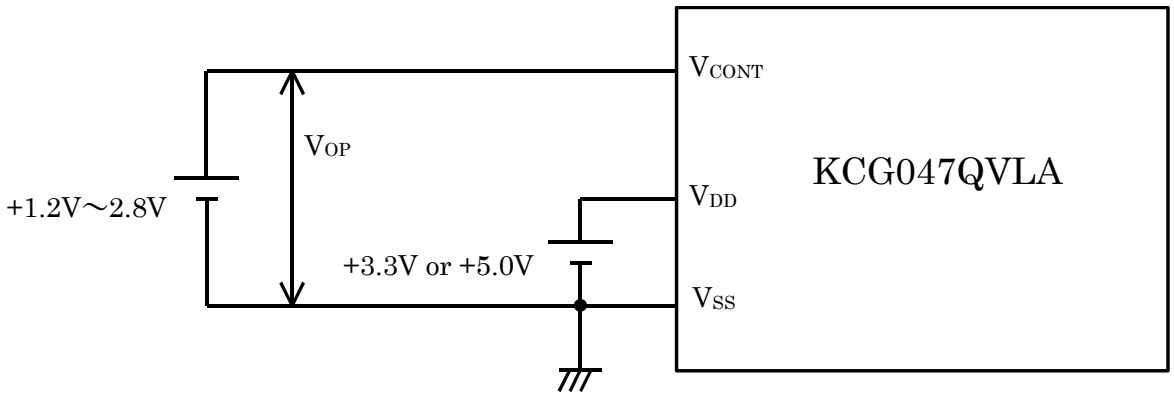

8. Interface signals

8-1. Pin assignment of LCD panel

No.	Symbol	Description	Level
1	FRM	Synchronous signal for driving scanning line	H
2	LOAD	Data signal latch clock	H → L
3	CP	Data signal shift clock	H → L
4	DISP	Display control signal	H(ON),L(OFF)
5	V_{DD}	Power supply for logic	-
6	V_{SS}	GND	-
7	V_{CONT}	LCD adjust voltage	-
8	D7	Display data	H(ON),L(OFF)
9	D6		
10	D5		
11	D4		
12	D3		
13	D2		
14	D1		
15	D0		
16	V_{DD}	Power supply for logic	-
17	V_{DD}		
18	V_{SS}	GND	-
19	V_{SS}		
20	V_{SS}		

LCD connector : 08-6210-020-340-800+ (ELCO)
Recommended matching FFC or FPC : 0.5mm pitch

8-2. Pin assignment of LED

No.	Symbol	Description
1	AN1	Anode 1
2	CA1	Cathode 1
4	CA2	Cathode 2
5	AN2	Anode 2

Backlight side FPC : 1mm pitch

9. Interface timing chart

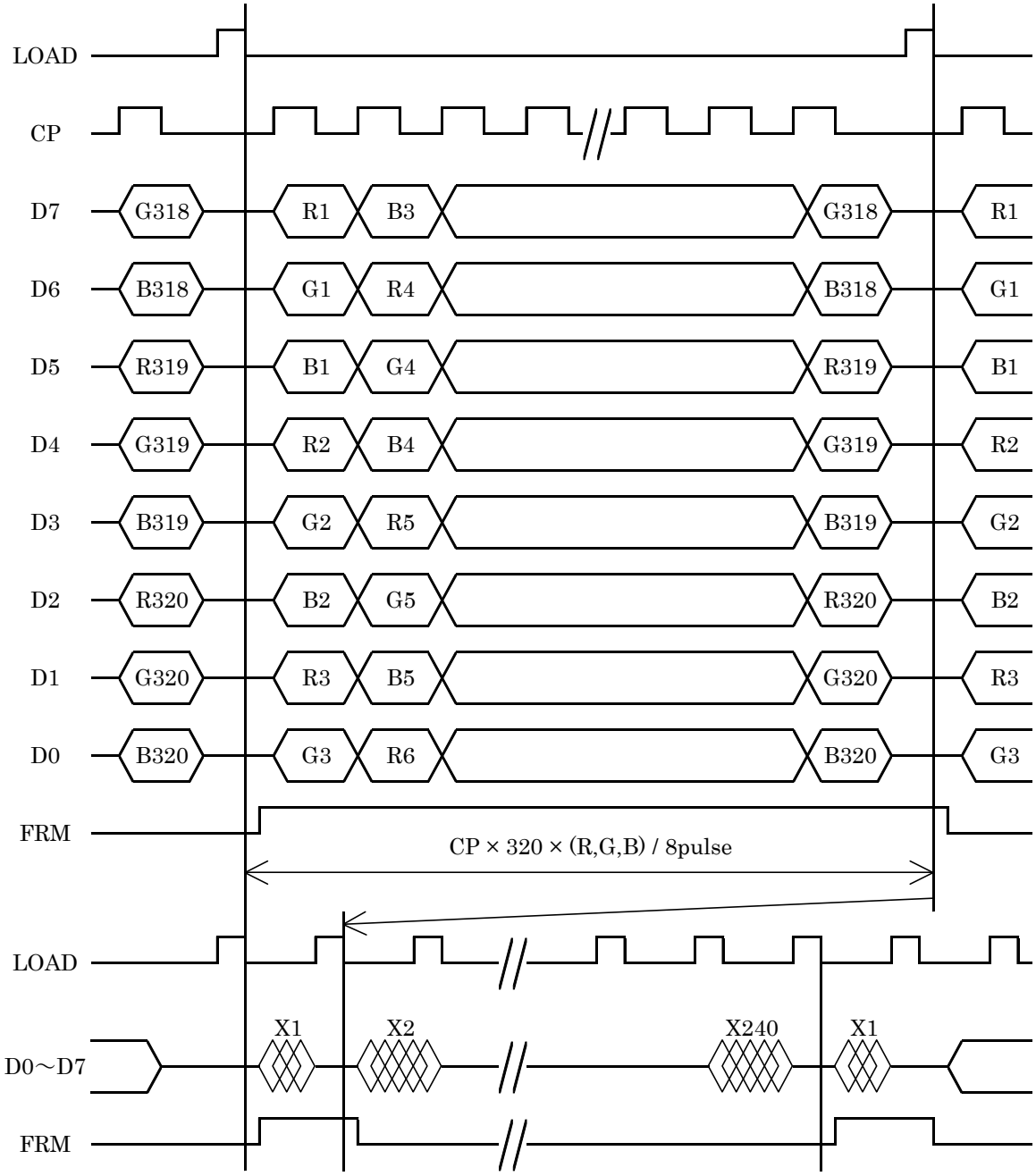

* The cycle of the LOAD signal should be stable and continuously applied without interruption.
* The above-mentioned timing chart is a reference to set up a LCD module, not an electrical rating.

10. Data and screen

	Y1			Y2			Y3			···	Y320		
X1	D7 R1	D6 G1	D5 B1	D4 R2	D3 G2	D2 B2	D1 R3	D0 G3	D7 B3	···	D2 R320	D1 G320	D0 B320
X240													

11. Input timing characteristics

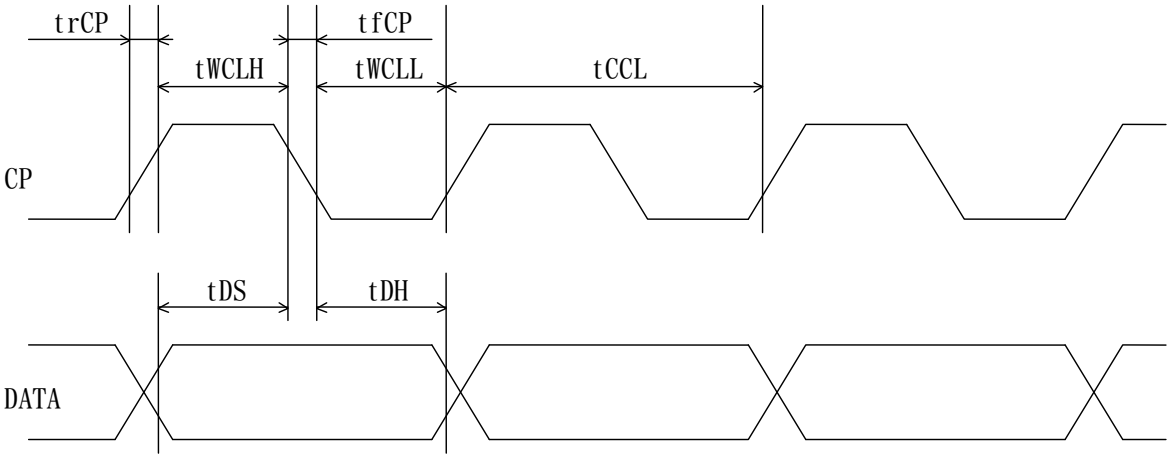

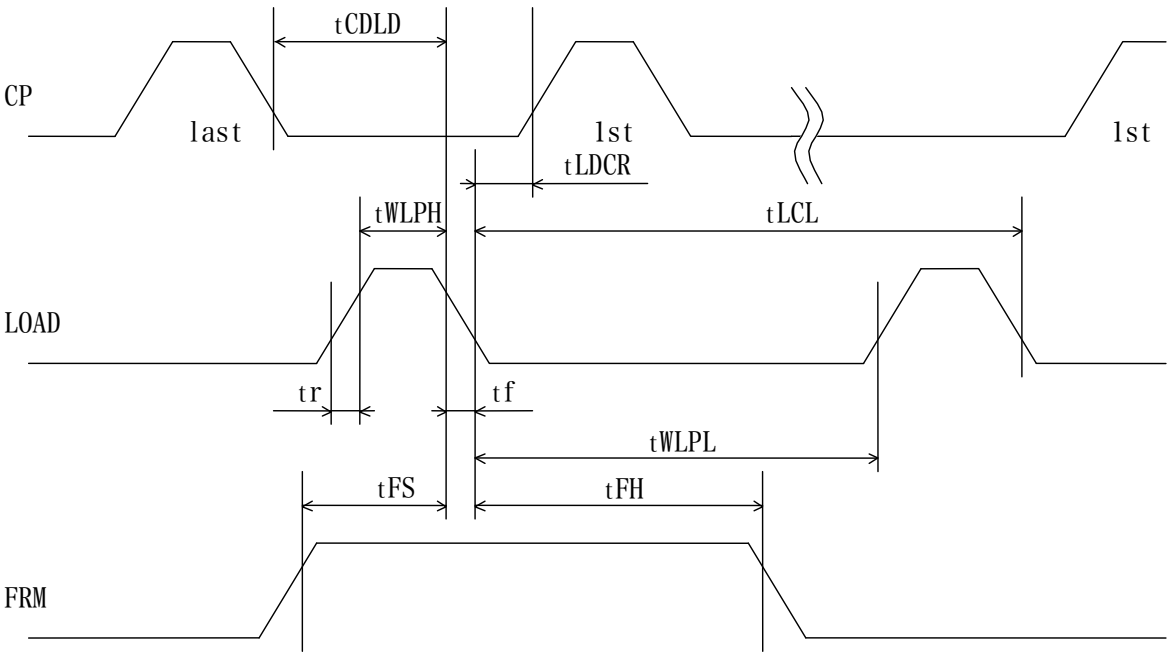

11-1. Switching characteristics (V_{DD} = 5.0V)

Input characteristics : V_{DD} = +5.0V ± 5%, Temp. = -20～70°C

Item		Symbol	Min.	Max.	Unit
CP cycle	*1	tCCL	100	-	ns
CP "H" pulse width		tWCLH	30	-	ns
CP "L" pulse width		tWCLL	30	-	ns
CP rise up time		trCP	-	15	ns
CP fall down time		tfCP	-	15	ns
Data set up time		tDS	25	-	ns
Data hold time		tDH	25	-	ns
LOAD "H" pulse width		tWLPH	40	-	ns
LOAD "L" pulse width		tWLPL	400	-	ns
LOAD cycle	*2	tLCL	500	-	ns
CP → LOAD delay time		tCDLD	60	-	ns
LOAD → CP delay time		tLDCR	60	-	ns
Input signal rise up time		tr	-	20	ns
Input signal fall down time		tf	-	20	ns
FRM data set up time		tFS	120	-	ns
FRM data hold time		tFH	30	-	ns

*1 CP cycle is adjusted so that FRM signal is 75Hz.

*2 LOAD cycle is constant.

11-2. Switching characteristics (V_{DD} = 3.3V)

Input characteristics : V_{DD} = +3.3V ± 0.3V, Temp. = -20～70°C

Item		Symbol	Min.	Max.	Unit
CP cycle	*1	tCCL	100	-	ns
CP "H" pulse width		tWCLH	40	-	ns
CP "L" pulse width		tWCLL	40	-	ns
CP rise up time		trCP	-	20	ns
CP fall down time		tfCP	-	20	ns
Data set up time		tDS	35	-	ns
Data hold time		tDH	35	-	ns
LOAD "H" pulse width		tWLPH	50	-	ns
LOAD "L" pulse width		tWLPL	400	-	ns
LOAD cycle	*2	tLCL	500	-	ns
CP → LOAD delay time		tCDLD	60	-	ns
LOAD → CP delay time		tLDCR	80	-	ns
Input signal rise up time		tr	-	20	ns
Input signal fall down time		tf	-	20	ns
FRM data set up time		tFS	120	-	ns
FRM data hold time		tFH	30	-	ns

*1 CP cycle is adjusted so that FRM signal is 75Hz.

*2 LOAD cycle is constant.

12. Supply voltage sequence condition

In normal operation, logic within the LCD module reverses the polarity of the drive voltage every few lines to prevent DC damage to the liquid crystal material. But when a voltage is present on V_{CONT} outside of the time when the V_{DD} logic voltage is stable, a drive voltage is applied to the liquid crystal material without the polarity reversals. This sometimes result in a deterioration of display quality and a reduction in life time.

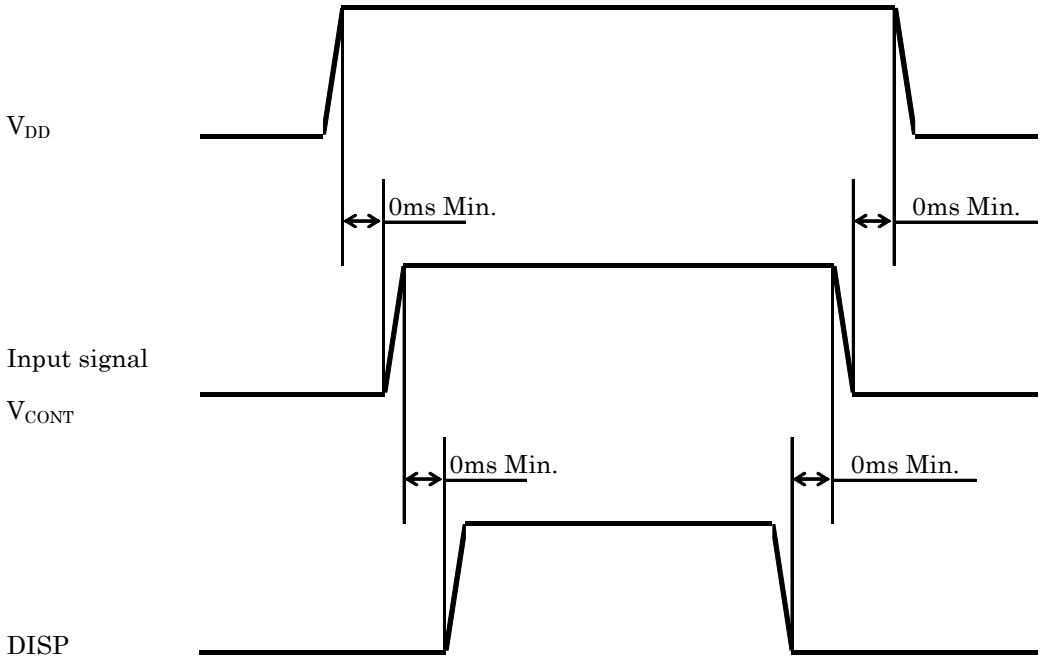

* Input signal: FRM, LOAD, CP, D0～D7

* The above sequence should be designed as to maintain each normal voltage when the liquid crystal module load is applied to your system.

* Control the supply voltage sequence to not float any signal line when the LCD panel is being driven.

13. LED Backlight characteristics

Item	Symbol	Min.	Typ.	Max.	Unit	Note
Forward current *1	IF	-	10	-	mA	Ta=-20～70°C
Forward voltage	VF	-	24.1	27.7	V	IF=10mA, Ta=-20℃
		-	23.7	27.2	V	IF=10mA, Ta=25℃
		-	23.1	26.7	V	IF=10mA, Ta=70℃
Operating life time *2, *3	T	-	40,000	-	h	IF=10mA, Ta=25℃

*1 For each “AN1-CA1” and “AN2-CA2”

*2 When brightness decrease 50% of minimum brightness.

*3 Life time is estimated data.
(Condition : IF=10mA, Ta=25℃ in chamber).

* An input current below 5.0mA may reduce the brightness uniformity of the LED backlight. This is because the amount of light from each LED chip is different. Therefore, please evaluate carefully before finalizing the input current.

14. Lot number identification

The lot number shall be indicated on the back of the backlight case of each LCD.

KCG047QVLAF-G040 - □□ - □□ - □ MADE IN □□□□□

↓↓ ↓ ↓ ↓

1 2 3 4 5

No1. - No5. above indicate
1. Year code
2. Month code
3. Date
4. Version Number
5. Country of origin (Japan or China)

Year	2009	2010	2011	2012	2013	2014
Code	9	0	1	2	3	4

Month	Jan.	Feb.	Mar.	Apr.	May	Jun.
Code	1	2	3	4	5	6

Month	Jul.	Aug.	Sep.	Oct.	Nov.	Dec.
Code	7	8	9	X	Y	Z

15. Warranty

15-1. Incoming inspection

Please inspect the LCD within one month after your receipt.

15-2. Production warranty

Kyocera warrants its LCD's for a period of 12 months from the ship date. Kyocera shall, by mutual agreement, replace or re-work defective LCD's that are shown to be Kyocera's responsibility.

16. Precautions for use

16-1. Installation of the LCD

1) The LCD module has a grounding hole. Please ground the module to prevent noise and to stabilize its performance as circumstances demand.
2) A transparent protection plate shall be added to protect the LCD and its polarizer.
3) The LCD shall be installed so that there is no pressure on the LSI chips.
4) The LCD shall be installed flat, without twisting or bending.
5) Please design the housing window so that its edges are between the active area and the effective area of the LCD screen.
6) A transparent protection sheet is attached to the polarizer. Please remove the protection film slowly before use, paying attention to static electricity.

16-2. Static electricity

1) Since CMOS ICs are mounted directly onto the LCD glass, protection from static electricity is required.
2) Workers should use body grounding. Operator should wear ground straps.

16-3. LCD operation

1) The LCD shall be operated within the limits specified. Operation at values outside of these limits may shorten life, and/or harm display images.
2) Adjust the "Supply voltage for LCD driving (V_{CONT})" to obtain optimum viewing angle and contrast ratio.

16-4. Storage

1) The LCD shall be stored within the temperature and humidity limits specified.
   Store in a dark area, and protect the LCD from direct sunlight or fluorescent light.
2) Always store the LCD so that it is free from external pressure onto it.

16-5. Usage

1) DO NOT store in a high humidity environment for extended periods. Polarizer degradation bubbles, and/or peeling off of the polarizer may result.
2) The front polarizer is easily scratched or damaged. Prevent touching it with any hard material, and from being pushed or rubbed.
3) The LCD screen may be cleaned by wiping the screen surface with a soft cloth or cotton pad using a little Ethanol.
4) Water may cause damage or discoloration of the polarizer. Clean condensation or moisture from any source immediately.
5) Always keep the LCD free from condensation during testing. Condensation may permanently spot or stain the polarizer.
6) Do not pull the LED FPC and do not bend the root of the wires. Housing should be designed to protect LED FPC from external stress.
7) Do not disassemble LCD module because it will result in damage.
8) This Kyocera LCD module has been specifically designed for use in general electronic devices, but not for use in a special environment such as usage in an active gas. Hence, when the LCD is supposed to be used in a special environment, evaluate the LCD thoroughly beforehand and do not expose the LCD to chemicals such as an active gas.
9) Please do not use solid-base image pattern for long hours because a temporary afterimage may appear. We recommend using screen saver etc. in cases where a solid-base image pattern must be used.
10) Liquid crystal may leak when the module is broken. Be careful not to let the fluid go into your eyes and mouth. In the case the fluid touches your body; rinse it off right away with water and soap.

17. Reliability test data

Test item	Test condition	Test time	Judgement
High temp. atmosphere	80°C	240h	Display function : No defect Display quality : No defect Current consumption : No defect
Low temp. atmosphere	-30°C	240h	Display function : No defect Display quality : No defect Current consumption : No defect
High temp. humidity atmosphere	40°C 90% RH	240h	Display function : No defect Display quality : No defect Current consumption : No defect
Temp. cycle	-30°C 0.5h R.T. 0.5h 80°C 0.5h	10cycles	Display function : No defect Display quality : No defect Current consumption : No defect
High temp. operation	70°C	500h	Display function : No defect Display quality : No defect Current consumption : No defect

* Each test item uses a test LCD only once. The tested LCD is not used in any other tests.

* The LCD is tested in circumstances in which there is no condensation.

* The reliability test is not an out-going inspection.

* The result of the reliability test is for your reference purpose only.
The reliability test is conducted only to examine the LCD's capability.

No	Description	Drawn	Checked	Checked	Approved

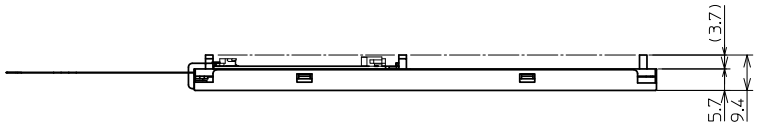

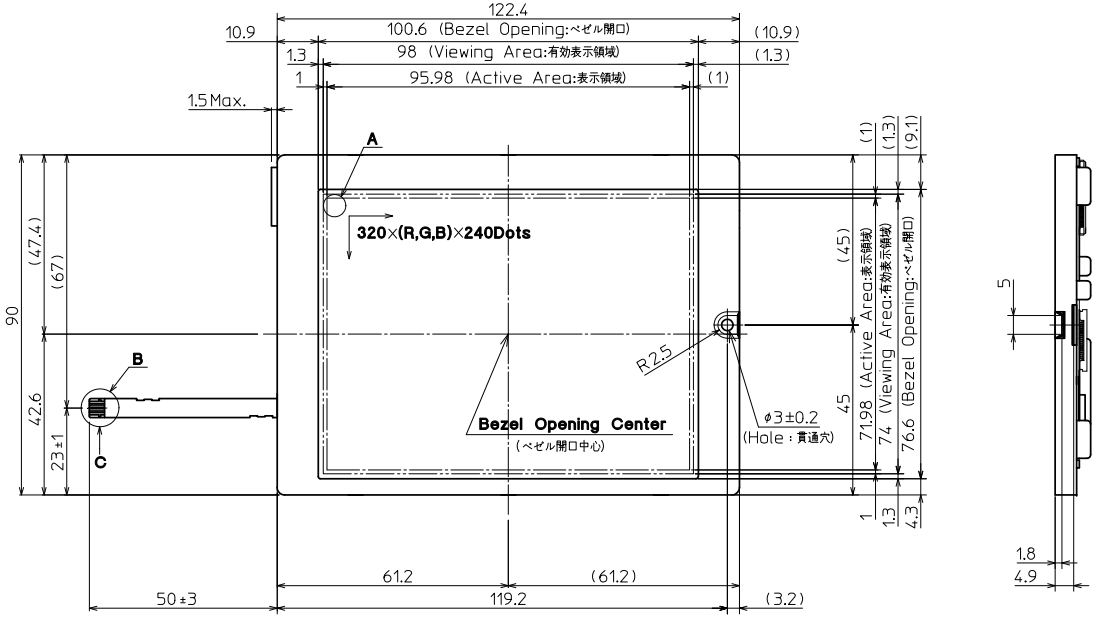

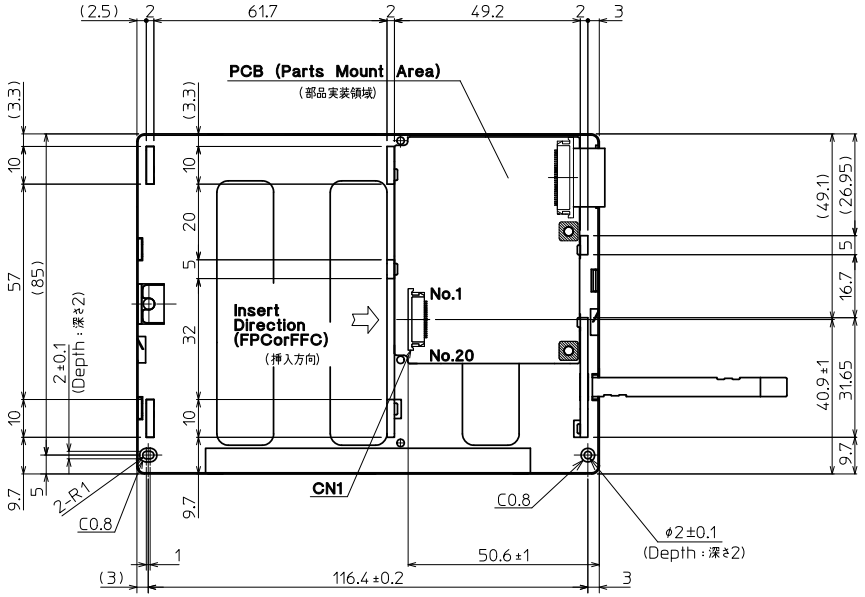

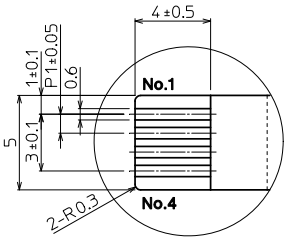

DETAIL B (5:1)

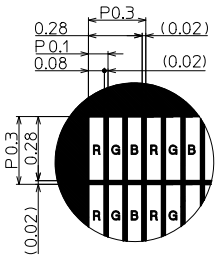

DETAIL A (NTS)
(Dot Size)

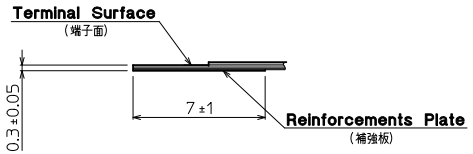

VIEWING C (5:1)

Note. (注記)
1 Connector CN1: 08-6210-020-340-800+ (ELCO)
(コネクター)
2 The Information of LCD is displayed starting at the upper left hand corner, moving right then down to the lower right hand corner.
(LCDにおいて、画像データの表示は左上コーナーから始まり、右へ進み下へ送られ右下コーナーへ向かう。)
3 Tolerance without indication: ±0.5
(指示無き公差)

Material 材質	Treatment 処理	Approved	Checked	Checked	Drawn	Scale	Title		Year-Month-Day	Size
		'07.04.16		'07.04.15		1:1 (5:1,NTS)	KCG047QVLAF	KYOCERA	'08.04.10	2
Quantity 製作数	Description; 備考 RoHS 08009AAA	朝倉		茶圓	野崎		Outline Dimensions	Drawing No.	121A5070000	

Spec No.	TQ3C-8EAC0-E2DEB48-00
Date	May 27, 2009

KYOCERA INSPECTION STANDARD

TYPE : KCG047QVLAF-G040

KYOCERA CORPORATION
KAGOSHIMA HAYATO PLANT
LCD DIVISION

Original Issue Date	Designed by : Engineering dept.			Confirmed by : QA dept.	
	Prepared	Checked	Approved	Checked	Approved
May 27, 2009	Y. Asano	H.Tokumori	Y.Matsumoto	J.Sakaguchi	

Revision record

Date	Designed by : Engineering dept.			Confirmed by : QA dept.	
	Prepared	Checked	Approved	Checked	Approved

Rev.No.	Date	Page	Descriptions

Visuals specification

1) Note

Item	Note	
General	1.When defects specified in this Inspection Standards are inspected, operating voltage (V_{OP}) shall be set at the level where optimized contrast is available. Display quality is applied up to effective viewing area. (Bi-level INSPECTION) 2.This inspection standard about the image quality shall be applied to any defect within the effective viewing area and shall not be applicable to outside of the area. 3.Should any defects which are not specified in this standard happen, additional standard shall be determined by mutual agreement between customer and Kyocera. 4.Inspection conditions Luminance : 500 Lux minimum. Inspection distance : 300 mm(from the sample) Temperature : 25±5°C Direction : right above	
Definition of inspection item	Pinhole, Bright spot Black spot, Scratch Foreign particle	The color of a small area is different from the remainder. The phenomenon does not change with voltage.
	Contrast variation	The color of a small area is different from the remainder. The phenomenon change with voltage.
	Polarizer (Scratch, Bubble, Dent)	Scratch, Bubble and Dent in the polarizer which can be observed in on / off state.

2)Standard

<table>
<tr><th>Inspection item</th><th>Judgement standard</th></tr>
<tr><td>Pinhole, Bright spot,
Black spot, Foreign particle</td><td>
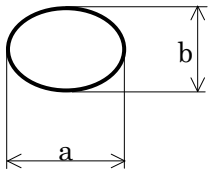

d = (a + b) / 2
<table>
<tr><th>Category</th><th>Size(mm)</th><th>Acceptable number</th></tr>
<tr><td>A</td><td>d ≦ 0.2</td><td>Neglected</td></tr>
<tr><td>B</td><td>0.2 ＜ d ≦ 0.3</td><td>5</td></tr>
<tr><td>C</td><td>0.3 ＜ d ≦ 0.5</td><td>3</td></tr>
<tr><td>D</td><td>0.5 ＜ d</td><td>0</td></tr>
</table>
</td></tr>
<tr><td>Scratch, Foreign particle</td><td>
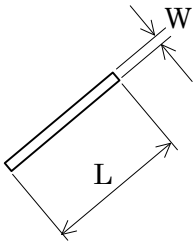

<table>
<tr><th></th><th>Width (mm)</th><th>Length (mm)</th><th>Acceptable number</th></tr>
<tr><td>A</td><td>W ≦0.03</td><td>-</td><td>Neglected</td></tr>
<tr><td>B</td><td rowspan="3">0.03＜ W ≦0.10</td><td>L ≦2.0</td><td>Neglected</td></tr>
<tr><td>C</td><td>2.0＜ L ≦4.0</td><td>3</td></tr>
<tr><td>D</td><td>4.0＜ L</td><td>0</td></tr>
<tr><td>E</td><td>0.10＜ W</td><td>-</td><td>According to ‘Circular’</td></tr>
</table>
</td></tr>
<tr><td>Contrast variation</td><td>
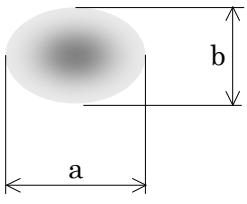

d = (a + b) / 2
<table>
<tr><th>Category</th><th>Size (mm)</th><th>Acceptable number</th></tr>
<tr><td>A</td><td>d ≦ 0.5</td><td>Neglected</td></tr>
<tr><td>B</td><td>0.5 ＜ d ≦ 0.7</td><td>3</td></tr>
<tr><td>C</td><td>0.7 ＜ d</td><td>0</td></tr>
</table>
</td></tr>
</table>

<table>
<tr><th>Inspection item</th><th>Judgement standard</th></tr>
<tr><td>Polarizer
(Scratch, Bubble, Dent)</td><td>
(1) Scratch
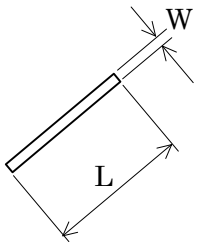

<table>
<tr><th></th><th>Width (mm)</th><th>Length (mm)</th><th>Acceptable No.</th></tr>
<tr><td>A</td><td>W ≦0.1</td><td>-</td><td>Neglected</td></tr>
<tr><td>B</td><td rowspan="2">0.1＜ W ≦0.3</td><td>L ≦5.0</td><td>Neglected</td></tr>
<tr><td>C</td><td>5.0＜ L</td><td>0</td></tr>
<tr><td>D</td><td>0.3＜ W</td><td>-</td><td>0</td></tr>
</table>
(2) Bubble (dent)
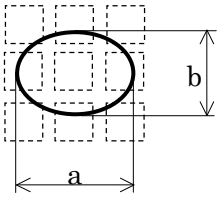

d = (a + b) / 2
<table>
<tr><th>Category</th><th>Size (mm)</th><th>Acceptable number</th></tr>
<tr><td>A</td><td>d ≦ 0.2</td><td>Neglected</td></tr>
<tr><td>B</td><td>0.2 ＜ d ≦ 0.3</td><td>5</td></tr>
<tr><td>C</td><td>0.3 ＜ d ≦ 0.5</td><td>3</td></tr>
<tr><td>D</td><td>0.5 ＜ d</td><td>0</td></tr>
</table>
</td></tr>
</table>