SPEC.NO.	TQ3C-8EAC0-E1CUP19-00
DATE	December 2, 2002

S P E C

FOR :

TYPE:KCG057QV1DC-G50

CONTENTS

1. Application
2. Construction and Outline
3. Mechanical Specifications
4. Absolute Maximum Ratings
5. Electrical Characteristics
6. Optical Characteristics
7. Circuit Block Diagram
8. Interface Signals
9. Interface Timing Chart
10. Data and Screen
11. Input Timing Characteristics
12. Supply Voltage Sequence Condition
13. Backlight Characteristics
14. Design Guidance for Analog Touch-Panel(T/P)
15. Lot Number Identification
16. Warranty
17. Precautions for Use
18. Reliability Data / Environmental Test
19. Outline Drawing

Issued
Date: DEC.09.2002
KYOCERA
Hayato LCD Division

KYOCERA CORPORATION
KAGOSHIMA HAYATO PLANT
LCD DIVISION

This specification is subject to change without notice.
Consult Kyocera before ordering.

Original	Designed by :Engineering Dept.			Confirmed by :QA Dept.	
Issue Data	Prepared	Checked	Approved	Checked	Approved
December 2, 2002	K Baba	M.Fujitani	H.Ono	J.Yoshida	S.Hayashi

Caution

1. This Kyocera LCD module has been specifically designed for use only in electronic devices in the areas of audio control, office automation, industrial control, home appliances, etc. The modules should not be used in medical applications where module failure could result in physical harm or loss of life, and Kyocera expressly disclaims any and all liability relating in any way to the use of the module in such medical applications.

2. Customer agrees to indemnify, defend and hold Kyocera harmless from and against any and all actions, claims, losses, damages, liabilities, awards, costs, and expenses, including legal fees, resulting from or arising out of Customer's use, or sale for use, of Kyocera modules in medical applications.

3. Kyocera shall have the right, which Customer hereby acknowledges, to immediately scrap or destroy tooling for Kyocera modules for which no Purchase Orders have been received from the Customer in a two-year period.

Revision Record

Date	Designed by: Engineering Dept.			Confirmed by: QA Dept.	
	Prepared	Checked	Approved	Checked	Approved

Rev. No.	Date	Page	Descriptions

1. Application

This data sheet defines the specification for a (320×R.G.B)×240 dot, STN Transmissive color dot matrix type Liquid Crystal Display with CFL backlight.

2. Construction and Outline

(320×R.G.B)×240 dots, COG type LCD with CFL backlight.

Backlight system	: "U" figured type CFL (1 tube).
Inverter	: Option. Recommended Inverter : CXA-L0612A-VJL(TDK) or Equivalent.
Polarizer	: Glare treatment.
Additional circuit	: Bias voltage circuit, Randomizing circuit, DC/DC Converter
Touch Panel	: Analog type . Non-Glare treatment.

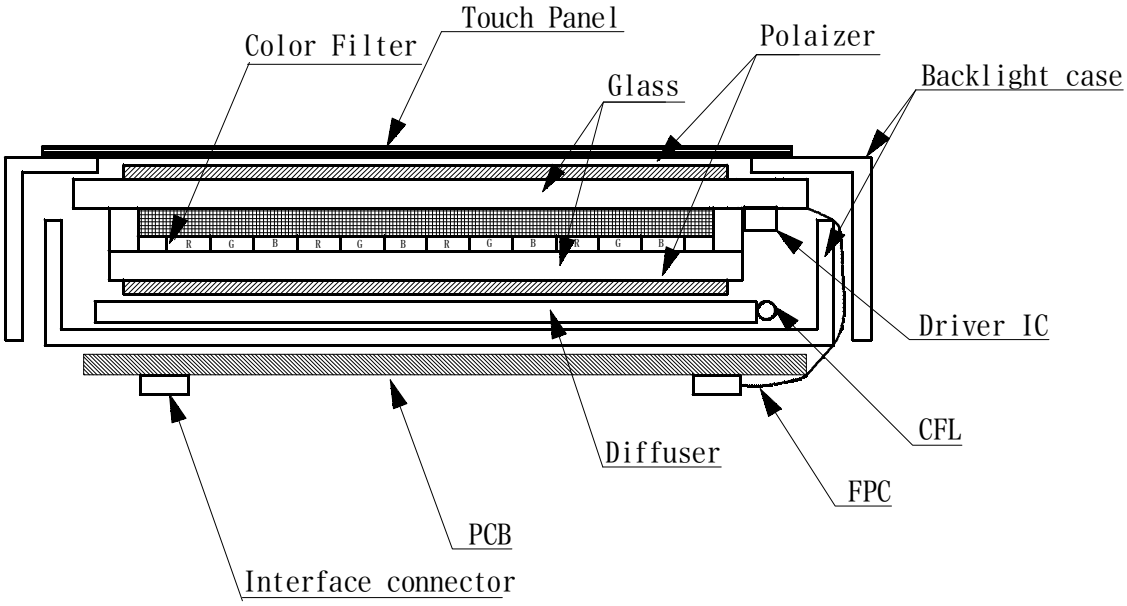

This drawing is showing conception only.

3. Mechanical Specifications

ITEM	SPECIFICATION	UNIT
Outline dimensions	144.0 (W) × 104.8 (H) × 14.5 (D)	mm
Effective viewing area	117.2 (W) × 88.4 (H)	mm
Dot number	(320×R.G.B) (W) × 240 (H)	Dots
Dot size	0.10 (W) × 0.34 (H)	mm
Dot pitch	0.12 (W) × 0.36 (H)	mm
Display color *1	White *2	—
Base color *1	Black *2	—
Mass	(TBD)	g

*1 Due to the characteristics of the LC material, the color vary with environmental temperature.

*2 Negative-type display
Display data "H" :R.G.B Dots ON : White
Display data "L" :R.G.B Dots OFF : Black

3-2. Mechanical Specifications of touch panel

ITEM	SPECIFICATION	UNIT
Input	Radius-0.8 stylus or Finger	—
Actuation Force	0.5N±0.3N	g
Transmittance	Typ.80	%
Surface hardness	pencil hardness 2H or more according	—

4. Absolute Maximum Ratings

4-1. Electrical absolute maximum ratings

ITEM	SYMBOL	MIN.	MAX.	UNIT
Supply voltage for logic	VDD	0	6.0	V
Supply voltage for LCD driving	VCONT	0	VDD	V
Input signal voltage *1	Vin	0	VDD	V
FRM freguency	fFRM	—	150	Hz
Touch Panel Supply voltage	Vtp	0	6.0	V
Touch Panel Input Current	Itp	0	0.5	mA

4-2. Environmental absolute maximum ratings

ITEM	SYMBOL	MIN	MAX	UNIT
Operating temperature *1	Top	0	60	℃
Storage temperature *2	T_{STO}	-20	60	℃
Operating humidity *3	Hop	10	*4	%RH
Storage humidity *3	H_{STO}	10	*4	%RH
Vibration	—	*5	*5	—
Shock	—	*6	*6	—

*1 LCD's display quality shall not be guaranteed at the temperature range of : below 0℃ and upper 40℃.

*2 Temp. = -20℃ < 48 h , Temp = 60℃ < 168 h
Store LCD panel at normal temperature/humidity.
Keep it free from vibration and shock.
LCD panel that is kept at low or high temperature for a long time can be defective due to the other conditions, even if the temperature satisfies standard.

*3 Non-condensation.

*4 Temp. ≦ 40℃, 85% RH Max.
Temp. > 40℃, Absolute Humidity shall be less than 85%RH at 40℃.

*5

Frequency	10～55 Hz	Converted to acceleration value : (0.3～9 m/s^2)
Vibration width	0.15 mm	
Interval	10-55-10 Hz 1 minute	

2 hours in each direction X/Y/Z (6 hours as total)
EIAJ ED-2531

*6 Acceleration: 490m/s^2
Pulse width : 11 ms
3 times in each direction : ±X/±Y/±Z.
EIAJ ED-2531

5. Electrical Characteristics

5-1. VDD= 5.0V Temp. = 25℃, VDD = +5.0V ± 5%

ITEM	SYMBOL	CONDITION	MIN.	TYP.	MAX.	UNIT
Supply voltage for logic	VDD	—	4.75	5.00	5.25	V
LCD driving voltage *1	Vop= VCONT	0 ℃	(1.20)	—	—	V
		25 ℃	(1.30)	(1.80)	(2.30)	V
		60 ℃	—	—	(2.40)	V
Input voltage (FRM,LOAD,CP,DISP,D0～D7)	Vin	"H" level	0.8VDD	—	VDD	V
		"L" level	0	—	0.2VDD	V
Input current	Iin	Input signal	-100	—	100	μA
Rush current for logic	Irush	When rush current happens	3.0A(Peak) × 1ms			
Clock frequency	f cp	—	2.02	2.16	7.14	MHz
Frame frequency *2	f_{FRM}	—	70	75	150	Hz
Current consumption for logic	IDD	*3	—	27.0	40.5	mA
Power consumption	Pdisp		—	135.0	202.5	mW

*1 Maximum contrast ratio is obtained by adjusting the LCD supply voltage (Vop= VCONT) for driving LCD.

*2 In consideration of display quality, it is recommended that frame frequency is set in the range of 70-80Hz. When you have to use higher frame and clock frequencies, confirm the LCD's performan -ce and quality prior to finalizing the frequency values:
Generally, as frame and clock frequencies become higher current consumption will get bigger and display quality will be degraded.

*3 Display high frequency pattern, (see below).
VDD = 5.0V , Vop = VCONT , f_{FRM} = 75 Hz , fcp = 2.16MHz, Temp = 25℃
Pattern:

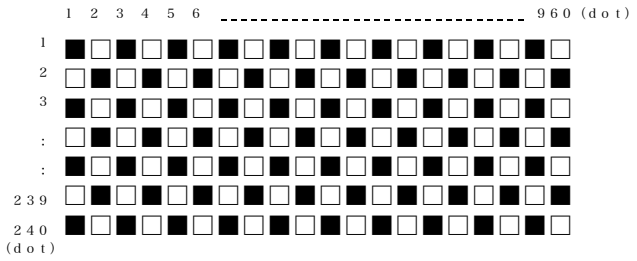

5-2. VDD=3.3V

Temp. = 25℃, VDD = +3.3V ± 0.3V

ITEM	SYMBOL	CONDITION	MIN.	TYP.	MAX.	UNIT
Supply voltage for logic	VDD	—	3.0	3.3	3.6	V
LCD driving voltage *1	Vop= VCONT	0 ℃	(1.20)	—	—	V
		25 ℃	(1.30)	(1.80)	(2.30)	V
		60 ℃	—	—	(2.40)	V
Input voltage (FRM,LOAD,CP,DISP,D0～D7)	Vin	"H" level	0.8VDD	—	VDD	V
		"L" level	0	—	0.2VDD	V
Input current	Iin	Input signal	-100	—	100	μA
Rush current for logic	Irush	When rush current happens	3.0A(Peak) × 1ms			
Clock frequency	f cp	—	2.02	2.16	5.88	MHz
Frame frequency *2	f_{FRM}	—	70	75	150	Hz
Current consumption for logic	IDD	*3	—	40.5	60.8	mA
Power consumption	Pdisp		—	133.7	200.6	mW

*1 Maximum contrast ratio is obtained by adjusting the LCD supply voltage (Vop= VCONT) for driving LCD.

*2 In consideration of display quality, it is recommended that frame frequency is set in the range of 70-80Hz. When you have to use higher frame and clock frequencies, confirm the LCD's performan -ce and quality prior to finalizing the frequency values:
Generally, as frame and clock frequencies become higher current consumption will get bigger and display quality will be degraded.

*3 Display high frequency pattern, (see below).
VDD = 3.3V , Vop = VCONT , f_{FRM} = 75 Hz , fcp = 2.16MHz, Temp = 25℃
Pattern:

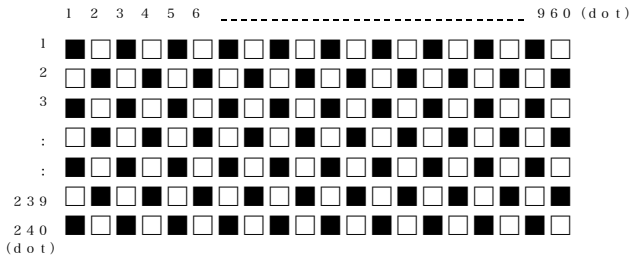

5-2.Touch Panel

5-2-1.Terminal resistance

Between xL and xR : 200 ～ 1000 Ω

Between yU and yL : 200 ～ 1000 Ω

5-2-2.Linearity

±1.5%

5-2-3.Insulation resistance

100MΩ or more at DC25V

6. Optical Characteristics

Temp. = 25℃

ITEM		SYMBOL	CONDITION		MIN.	TYP.	MAX.	UNIT
Response time	Rise	Tr	$\theta=\phi=0°$		—	180	280	ms
	Down	Td	$\theta=\phi=0°$		—	170	270	ms
Viewing angle range		θ	CR≧2	$\phi=0°$	-35	—	20	deg.
		ϕ		$\theta=0°$	-50	—	50	deg.
Contrast ratio		CR	$\theta=\phi=0°$		(30)	(55)	—	—
Brightness(IL=4.0mA)		L	—		(200)	(280)	—	cd/m²
Chromaticity coordinates	Red	x	$\theta=\phi=0°$		0.50	0.55	0.60	—
		y			0.28	0.33	0.38	
	Green	x	$\theta=\phi=0°$		0.24	0.29	0.34	
		y			0.44	0.49	0.54	
	Blue	x	$\theta=\phi=0°$		0.10	0.15	0.20	
		y			0.07	0.12	0.17	
	White	x	$\theta=\phi=0°$		0.25	0.30	0.35	
		y			0.25	0.30	0.35	

Optimum contrast is obtained by adjusting the LCD driving voltage(Vop) while at the viewing angle of $\theta = \phi = 0°$.

6-1. Contrast ratio is defined as follows:

$$CR = \frac{\text{Brightness at all pixels "White"}}{\text{Brightness at all pixels "Black"}}$$

6-2. Definition of Vop

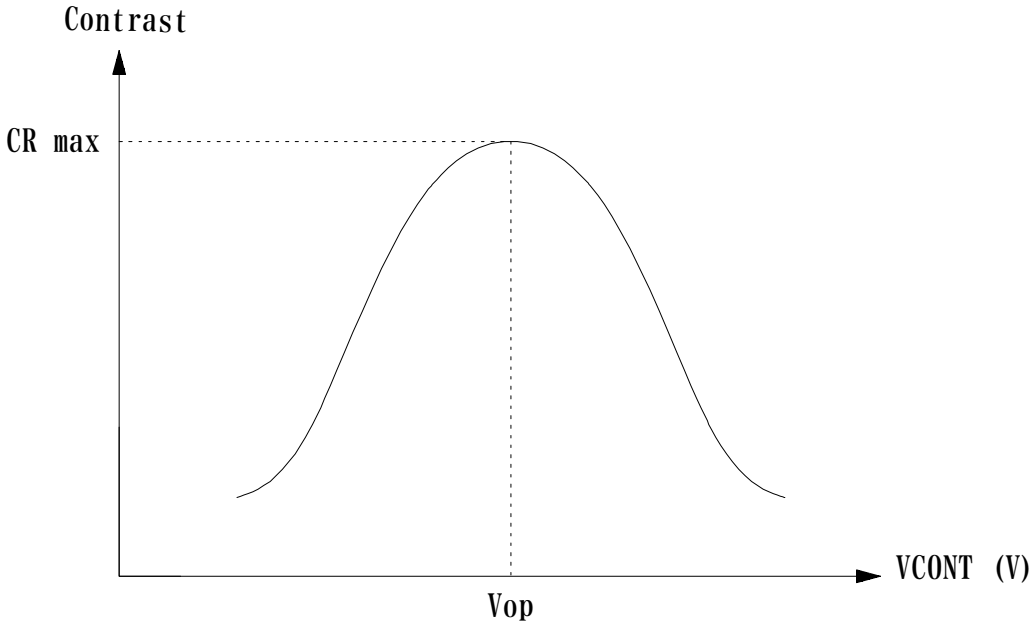

6-3. Definition of response time

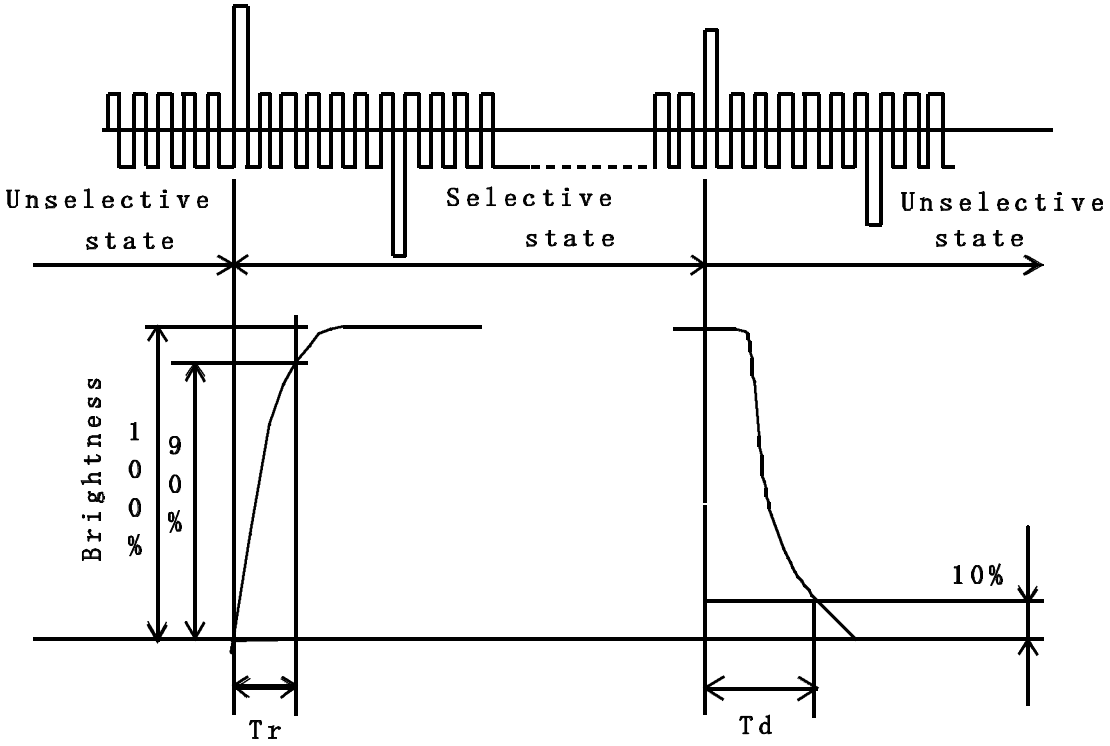

6-4. Definition of viewing angle

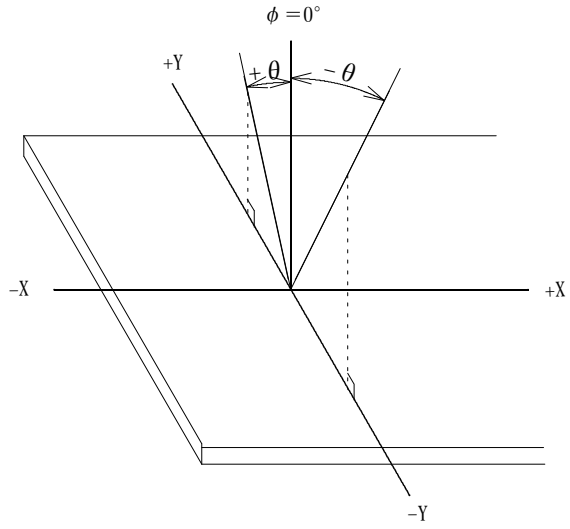

(θ direction)

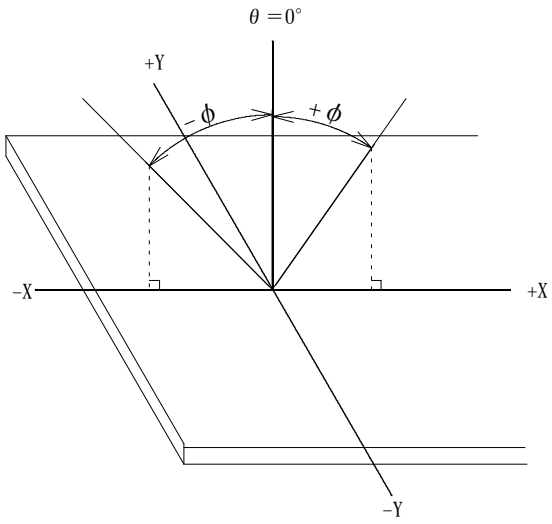

(ϕ direction)

6-5. Measuring points

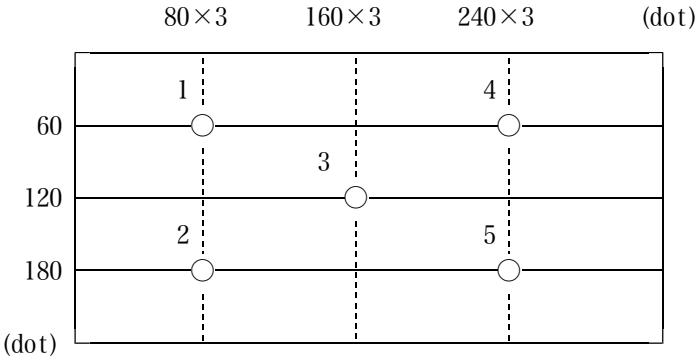

1) Rating is defined as the average brightness inside the viewing area.

2) 30 minutes after CFL is turned on. (Ambient Temp.=25℃)

3) The inverter should meet the eccentric conditions;
-Sine, symmetric waveform without spike in positive and negative.

7. Circuit Block Diagram

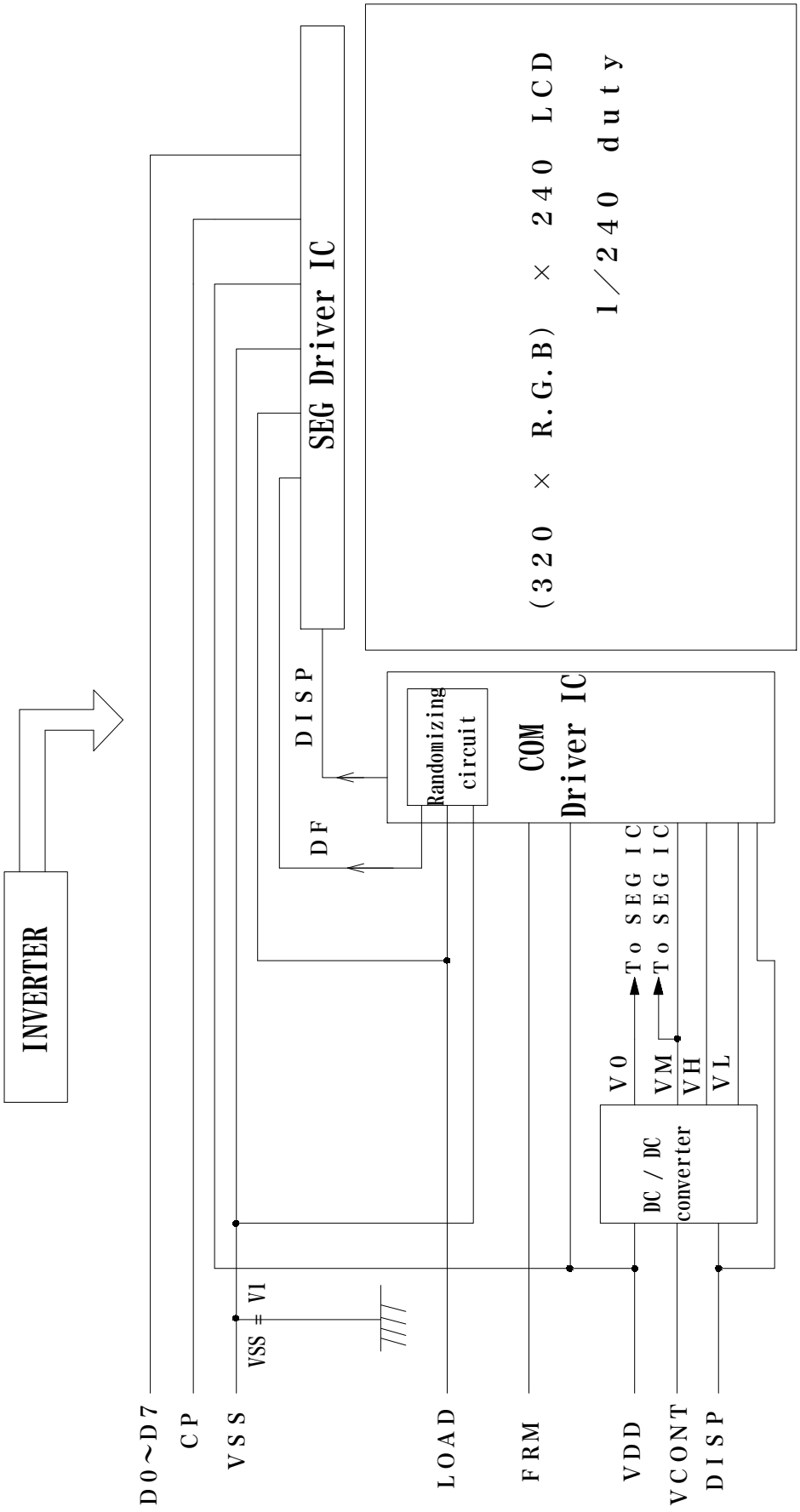

7-1. Power supply

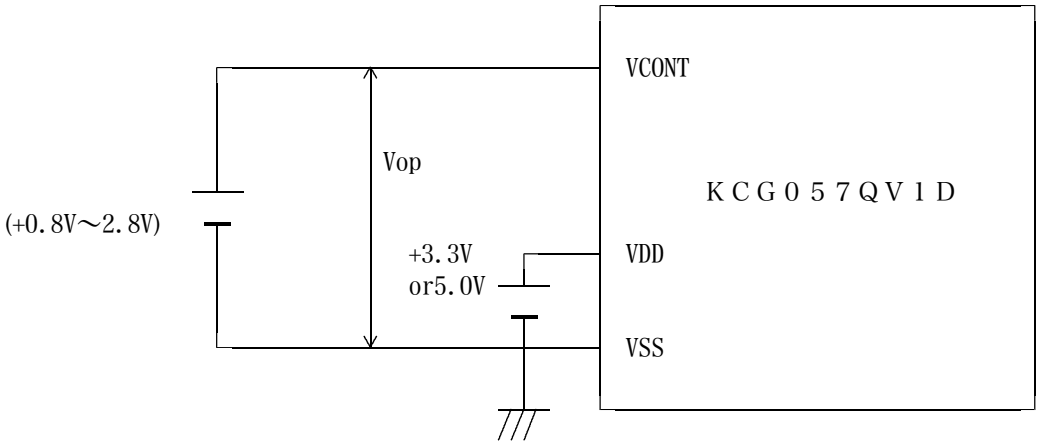

8. Interface signals

8-1. LCD

PIN NO.	SYMBOL	DESCRIPTION	LEVEL
1	FRM	Synchronous signal for driving scanning line	H
2	LOAD	Data signal latch clock	H → L
3	CP	Data signal shift clock	H → L
4	DISP	Display control signal	H(ON),L(OFF)
5	VDD	Power supply for logic	—
6	VSS	GND	—
7	VCONT	LCD adjust voltage	—
8	D7	Display data	H(ON),L(OFF)
9	D6		
10	D5		
11	D4		
12	D3		
13	D2		
14	D1		
15	D0		
16	VDD	Power supply for logic	—
17	VDD		
18	VSS	GND	—
19	VSS		
20	VSS		

LCD connector : 08-6210-020-340-800 (ELCO)
Recommended matching connector : 0.5mm pitch FFC or FPC

8-2. CFL

PIN No	SYMBOL	DESCRIPTION	LEVEL
1	HV	Power supply for CFL	AC
2	NC	—	—
3	GND	Ground line(from inverter)	—

LCD side connector : BHR-03VS-1 (JST)
Recommended matching connector : SM02-(8.0)B-BHS-1 (JST)

8-3. Touch panel

PIN No.	SYMBOL	DESCRIPTION
1	yU	y-Upper terminal
2	xL	x-Left terminal
3	yL	y-Lower terminal
4	xR	x-Right terminal

9. Interface Timing Chart

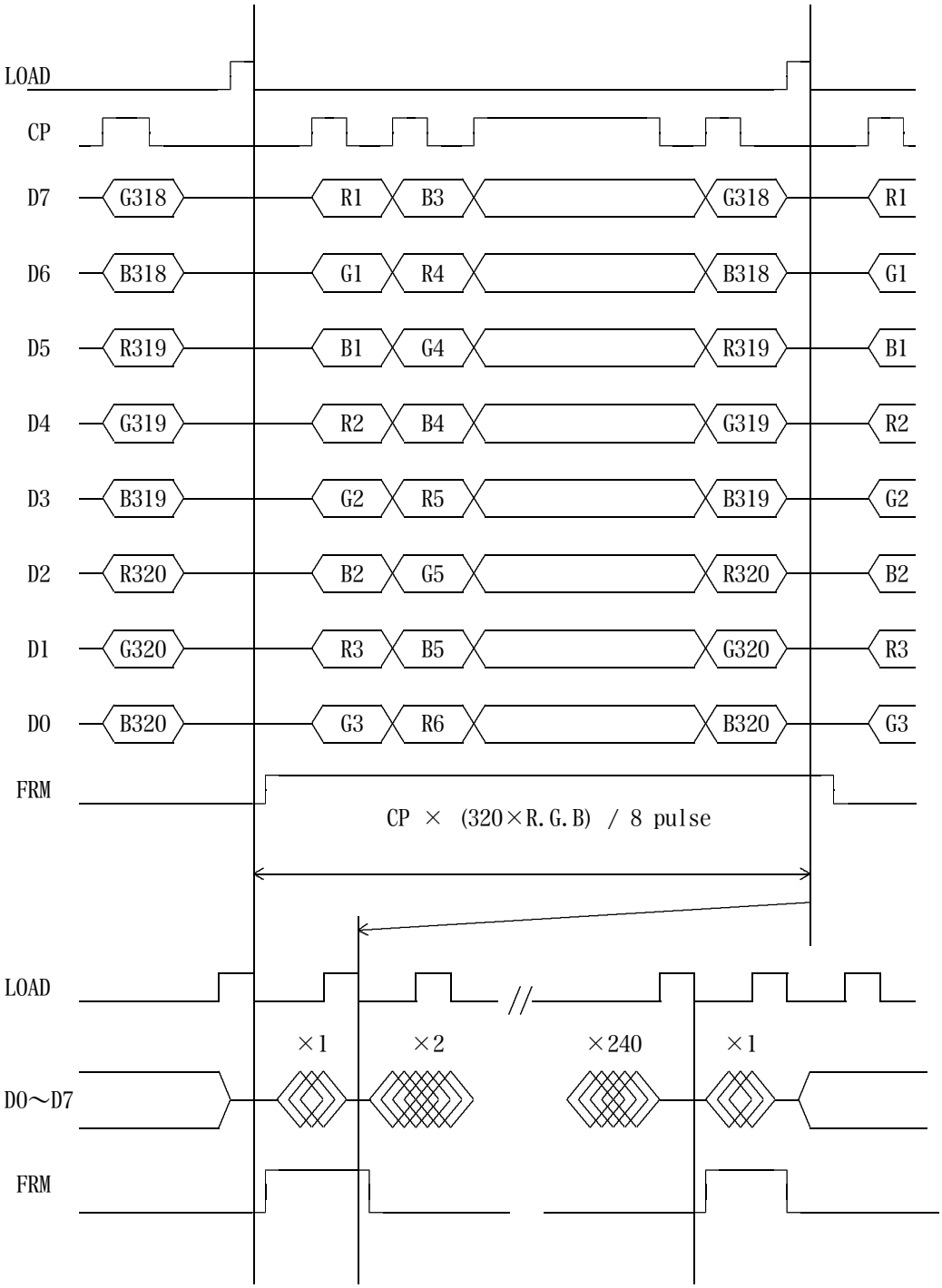

* The cycle of load signal should be stable and continuously applied without interruption.

* The above-mentioned timing chart shows a reference to set up a LCD module, not an electrical rating.

10. Data and Screen

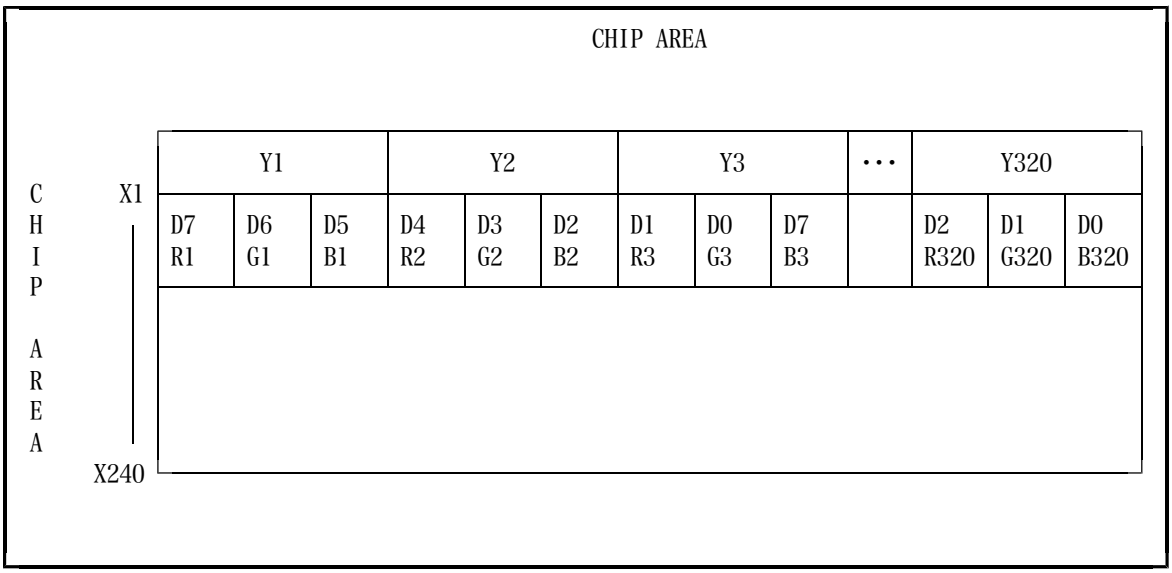

11. Input Timing Characteristics

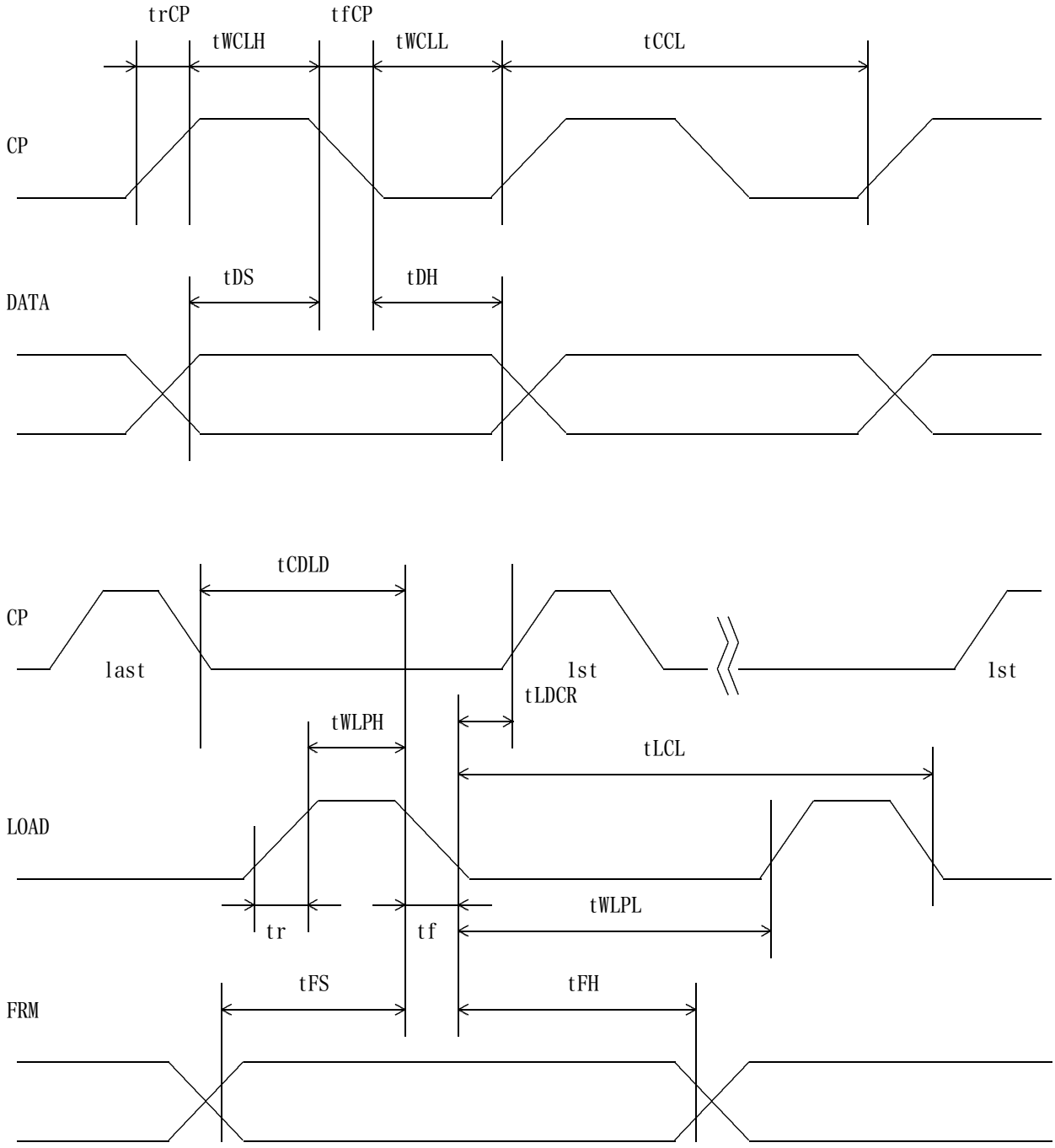

11-1. Switchig characteristics

Input Characteristics ; VDD = +5.0V ± 5%, Temp. = 25 ℃

ITEM		SYMBOL	MIN.	MAX.	UNIT
CP Cycle	*1,*2	tCCL	140	—	ns
CP "H" Pulse Width	*2	tWCLH	60	—	ns
CP "L" Pulse Width	*2	tWCLL	60	—	ns
CP Rise Up Time	*2	trCP	—	15	ns
CP Fall Down Time	*2	tfCP	—	15	ns
Data Set Up Time		tDS	30	—	ns
Data Hold Time		tDH	30	—	ns
LOAD "H" Pulse Width		tWLPH	60	—	ns
LOAD "L" Pulse Width		tWLPL	400	—	ns
LOAD Cycle	*3	tLCL	500	—	ns
CP Down→LOAD Down Dalay Time		tCDLD	100	—	ns
LOAD Down→CP Rise Dalay Time	*4	tLDCR	100	—	ns
Input Signal Rise Up Time		tr	—	20	ns
Input Signal Fall Down Time		tf	—	20	ns
FRM Data Set Up Time		tFS	120	—	ns
FRM Data Hold Time		tFH	30	—	ns

*1 CP Cycle is adjust so that FRM signal is 75Hz.

*2 The formula of condition
① trCP + tfCP < tCCL - (tWCLH + tWCLL)
② trCP, tfCP ≦ 30 ns
Please use on condition that ①,② are filled.

*3 LOAD Cycle is const.

*4 tLC≧0

11-2. Switchig characteristics

Input Characteristics ; VDD = +3.3V ± 0.3V, Temp. = 25 ℃

ITEM		SYMBOL	MIN.	MAX.	UNIT
CP Cycle	*1,*2	tCCL	170	−	ns
CP "H" Pulse Width	*2	tWCLH	80	−	ns
CP "L" Pulse Width	*2	tWCLL	80	−	ns
CP Rise Up Time	*2	trCP	−	20	ns
CP Fall Down Time	*2	tfCP	−	20	ns
Data Set Up Time		tDS	60	−	ns
Data Hold Time		tDH	60	−	ns
LOAD "H" Pulse Width		tWLPH	80	−	ns
LOAD "L" Pulse Width		tWLPL	400	−	ns
LOAD Cycle	*3	tLCL	500	−	ns
CP Down→LOAD Down Dalay Time		tCDLD	100	−	ns
LOAD Down→CP Rise Dalay Time	*4	tLDCR	100	−	ns
Input Signal Rise Up Time		tr	−	20	ns
Input Signal Fall Down Time		tf	−	20	ns
FRM Data Set Up Time		tFS	120	−	ns
FRM Data Hold Time		tFH	30	−	ns

*1 CP Cycle is adjust so that FRM signal is 75Hz.

*2 The formula of condition
① trCP + tfCP < tCCL - (tWCLH + tWCLL)
② trCP, tfCP ≦ 30 ns
Please use on condition that ①,② are filled.

*3 LOAD Cycle is const.

*4 tLC≧0

12. Supply Voltage Sequence Condition

DO NOT apply DC voltage to the LCD panel. DC voltage induce irreversible electrochemical reactions and reduce LCD life. Always follow the power supply ON/OFF sequence of VDD first, input signal second, VCONT third and finally DISP. This will prevent DC driving of the LCD or CMOS LSI latch up as shown below.

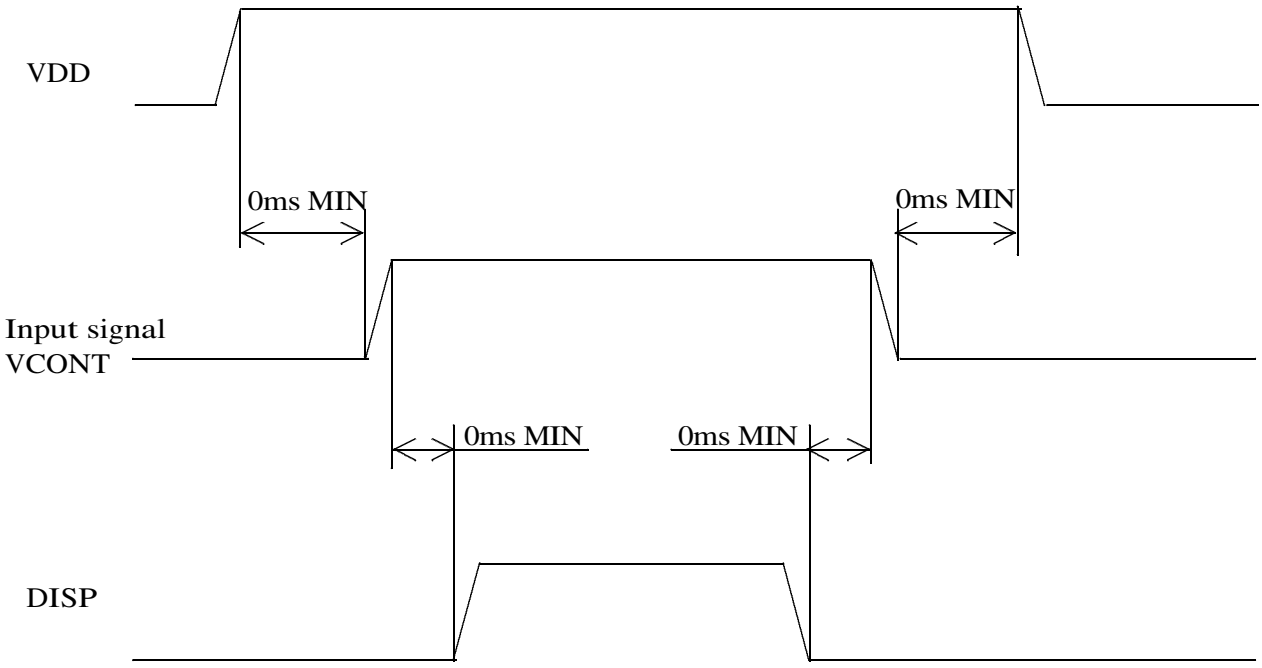

* Input signal : CP,LOAD,FRM,VCONT,D0～D7

* The above sequence should be designed as to keep each normal figure on condition that liquid crystal module is loaded on your system.

* Control the input signal and VCONT to the above ON - OFF timing when you switch ON/OFF the display during VDD and DISP are on.
  And design the circuit as VCONT's OFF level become GND level at the some time.

1 3. Backlight Characteristics

Temp.= 25℃

ITEM	SYMBOL	MIN.	TYP.	MAX.	NOTE
Starting discharge Voltage *1	VS	—	—	1550 Vrms.	0 ℃
		—	—	1035 Vrms.	25 ℃
Discharging tube current *2,*3	IL	3.0 mArms.	4.0 mArms.	6.0 mArms.	—
Discharging tube voltage	VL	—	685 Vrms.	—	—
Operating life *4 (IL=4.0 mArms.)	T	60,000 h	75,000 h	—	—
Operating frequency	F	30 kHz	—	100 kHz	—

*1 The Non-load output voltage (VS) of the inverter should be designed to have some margin, because VS may increase due to the leak current which may be caused by wiring of CFL cables. (Reference value: 2015 Vrms MIN.)

*2 We recommend that you should set the discharging tube current at lower than typical value so as to prevent the heat accumulation of CFL tube from deteriorating a performance of the LCD.

*3 Do not apply more than 6.0mA discharging tube current. Because CFL maybe broken due to over current.

*4 When the illuminance or quantity of light has decreased to 50 % of the initial value. Average life time of CFL will be decreased when LCD is operating at lower and higher temperature.

１４. Design Guidance for Analog Touch-Panel(T/P)

14-1. Electrical

In customer's design, please remember the following considerations.

1. Do not use the current regulated circuit.
2. Keep the current limit with top and bottom layer.(See Sec, 4-1)
3. Analog T/P can not sense two point touching separately.
4. A contact resistance is appeared at the touch point between top and bottom layer.
   After this resistance has stable read the T/P position data.
5. Analog T/P is also a "Capacitor" in an equivalent circuit.
   Design your sensing circuit and low-pass filter with considering this "Capacitor" value.
6. Because noise of inverter or peripheral circuits may interfere signal of touch panel itself
   it is necessary to design carefully in advance to avoid these noise problem.

14-2. Software

1. Do the "User Calibration".
2. "User Caribration" may be needed with long term using.
   Include "User Caribration" menu in your software.
3. When drawing a line with a stylus, there may be a slight discontinuity when the stylus passes
   over a spacer-dot. If necessary, please provide a compensation feature within your software.

14-3. Mechanical Design

14-3-1.Each "Area"

Please confirm the following information before starting your design.

(a) Key Area

"Key Area" is an area where T/P specifications(Linearity,Durability,Actuation force, etc.) are guaranteed.

1) Do a touch data sensing and calibration inside this area.
2) In normal cases it is a same size as your flat display's "active area".
3) The ITO layer durability near the edge of Key area is less stronger than the center.

(b) Transparent Insulation-paste Area.

Insulation-paste is printed with 1.0mm distance outer from "Key Area".

1) The purpose is to avoid potential shorting problem from the bezel housing edge from or
   housing "stick" when molding.
2) Consider your housing edge position to keep 1.0mm distance from this paste line.
   (See.Fig.1)
3) The cross section of this edge is taper shape. So if it is over the display's active area,
   it will be shining as a prism.

(c) Prohibition Area

Input by pen and finger is prohibited in this area.
Because of the thickness around T/P, the ITO layer on the PET film will be expanded and as a conclusion it will be cracked if pressed.(See.Fig.2)

1) We strongly recommend that the bezel should protect this area.
2) An exposure of this area and stylus contact should be avoided.
3) When assembling at the customer, do not press this area with tools.
4) Consider your design to avoid the pressure by the housing bezel.

14-3-2. Example of Housing Design.

1) If an consumer will put a palm on housing in normal usage care should be taken as follows.
2) Keep the gap, for example 0.3 to 0.7mm, between bezel edge and T/P surface.
   The reason is to avoid the bezel edge from contacting T/P surface that may cause a "short" with bottom layer. (See. Fig. 1)
3) Insertion a cushion material is recommended.
4) The cushion material should be limited just on the busbar insulation past area.
   If it is over the transparent insulation paste area a "short" may be occurred.
5) If there is a probability of the touch panel surface being exposed to water, steam or other liquids, then please take measures to ensure that the bezel / touch panel gap and housing are "water tight".
6) There is a vent channel to equalize air pressure between the inner space of the touch panel and the atmosphere. Please make sure it is not blocked by your housing and mounting method. There is also the possibility that moisture could percolate into the touch panel if moisture is allowed to accumulate around the air vent channel. Furthermore, avoid high air pressures inside your housing which could cause the touch panel outer surface to swell out from inflation.

14-3-3. Mounting on display and housing bezel

1) In all cases, the T/P should be supported form the backside of the glass.
2) Do not use an adhesive tape to bond it on the front of T/P and hang it to the housing bezel.
3) Never expand the T/P top layer (PET-film) like a balloon by internal air pressure.
   The life of the T/P will be extremely short.
4) If a dew will be on the heat-sealed area or exposed traces at the end of a flexible tail, the migration of silver can occur.
   This will cause sometimes a short circuit.

If your final product will used in a humid circumstance or will be moved from humid, warm environments to cold ones, a dew condensation can occur.

Consider a water seal with your housing bezel.

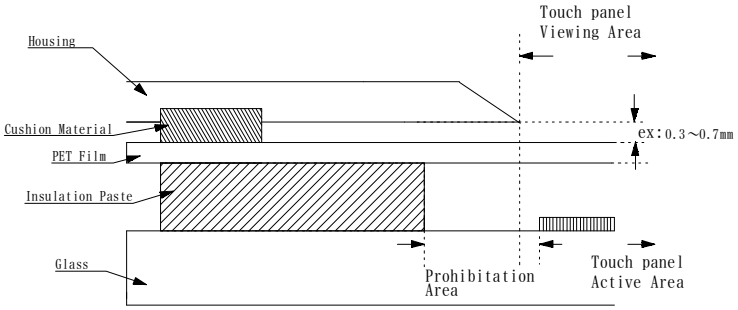

Fig. 1

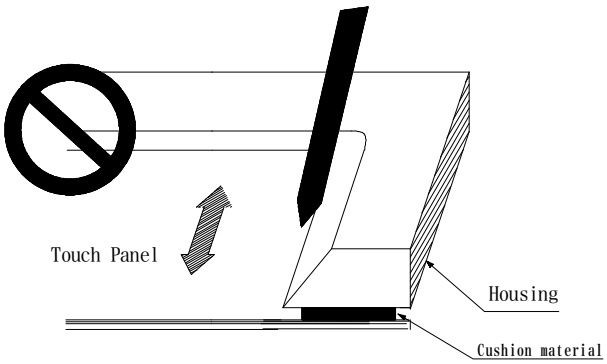

Fig. 2

15. Lot Number Identification

The lot number shall be indicated on the back of the backlight case of each LCD.

KCG057QV1DC-G50- □ □-□ □

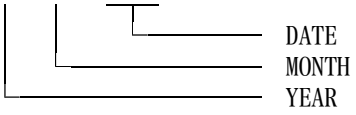

YEAR	2002	2003	2004	2005	2006	2007
CODE	2	3	4	5	6	7

MONTH	JAN.	FEB.	MAR.	APR.	MAY	JUN.
CODE	1	2	3	4	5	6

MONTH	JUL.	AUG.	SEP.	OCT.	NOV.	DEC.
CODE	7	8	9	X	Y	Z

16. Warranty

16-1. Incoming inspection

Please inspect the LCD within one month after your receipt.

16-2. Production Warranty

Kyocera warrants its LCDs for a period of 12 months after receipt by the purchaser, and within the limits specified. Kyocera shall, by mutual agreement, replace or rework defective LCDs that are shown to be Kyocera's responsibility.

17. Precautions for use

17-1. Installation of the LCD

1. Please ground either of the mounting (screw) holes located at each corner of an LCD module, in order to stabilize brightness and display quality.
2. A transparent protection plate shall be added to protect the LCD and its polarizers.
3. The LCD shall be installed so that there is no pressure on the LSI chips.
4. The LCD shall be installed flat, without twisting or bending.
5. The display window size should be the same as the effective viewing area.
6. In case you use outside frame of effective viewing area as outward appearance of your product, unevenness of its outward appearance is out of guarantee.
7. Do not pull the CFL lead wires and do not bend the root of the wires.
   Housing should be designed to protect CFL lead wires from external stress.
8. We do not warranty optical performance outside of the active viewing area. Please ensure that the bezel / housing minimizes area outside of "active viewing area" viewed by the end user."

17-2. Static Electricity

1. Since CMOS ICs are mounted directly onto the LCD glass, protection from static electricity is required. Operation should wear ground straps.

17-3. LCD Operation

1. The LCD shall be operated within the limits specified. Operation at values outside of these limits may shorten life, and/or harm display images.
2. Vop must be adjusted to optimize viewing angle and contrast.
3. Operation of the LCD at temperature below the limit specified may cause image degradation and/or bubbles.
   It may also change the characteristics of the liquid crystal.
   This phenomenon may not recover. The LCD shall be operated within the temperature limits specified.

17-4. Storage

1. The LCD shall be stored within the temperature and humidity limits specified.
   Store in a dark area, and protected the LCD from direct sunlight or fluorescent light.
2. The LCD should be packaged to prevent damage.

17-5. Screen Surface

1. DO NOT store in a high humidity environment for extended periods.
   Image degradation, bubbles, and/or peeling off of polarizer may result.
2. The front polarizer is easily scratched or damaged.
   Prevent touching it with any hard material, and from being pushed or rubbed.
3. The LCD screen may be cleaned with a soft cloth or cotton pad.
   Methanol, or Isopropyl Alcohol may be used, but insure that all solvent residue is removed.
4. Water may cause damage or discoloration of the polarizer.
   Clean any condensation or moisture from any source immediately.
5. Always keep the LCD free from condensation during testing.
   Condensation may permanently spot or stain the polarizers.

18. Reliability Data / Environmental Test

TEST ITEM	TEST CONDITION	TEST TIME	RESULT
High Temp. Atmosphere	70℃	240 h	Display Quality : No defect Display Function : No defect Current Consumption : No defect
Low Temp. Atmosphere	-20℃	240 h	Low Temp. Bubble : None Solid Crystallization of Liquid Crystal : None Display Quality : No defect Display Function : No defect Current Consumption : No defect
High Temp. Humidity Atmosphere	40℃ 90%RH	240 h	Display Quality : No defect Display Function : No defect Peel-off of Organic Sealing : None Current Consumption : No defect
Temp. Cycle	-20℃ 0.5 h R.T. 0.5 h 70℃ 0.5 h	10 cycles	Display Quality : No defect Display Function : No defect Peel-off of Organic Sealing : None Bubble on Cell : None
High Temp. Operation	60℃ Vop	500 h	Display Quality : No defect Current Consumption : No defect
Point Activation life	Polyacetal stylus (R0.8) Hitting force 3N Hitting speed 2 time/s	one million times	Display Quality : No defect Current Consumption : No defect

* Each test item uses a test LCD only once. The tested LCD is not used in any other tests.

* The LCD is tested in circumstances in which there is no condensation.

* The tested LCD is inspected after 24 hours of storage at room temperature and room humidity after each test is finished.

* The reliability test is not an out-going inspection.

* The results of the reliability test are for your reference purpose only.
The reliability test is conducted only to examine the LCD's capability.

No	Description	Drawn	Checked	Checked	Approved
⚠	Air Vent位置，詳細図追加	'02.12.04 倉元	'02.12.05 今村	'02.12.05 朝倉	'02.12.05 竹本

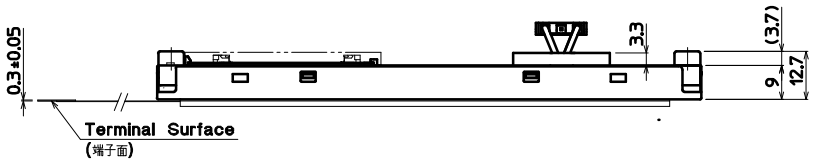

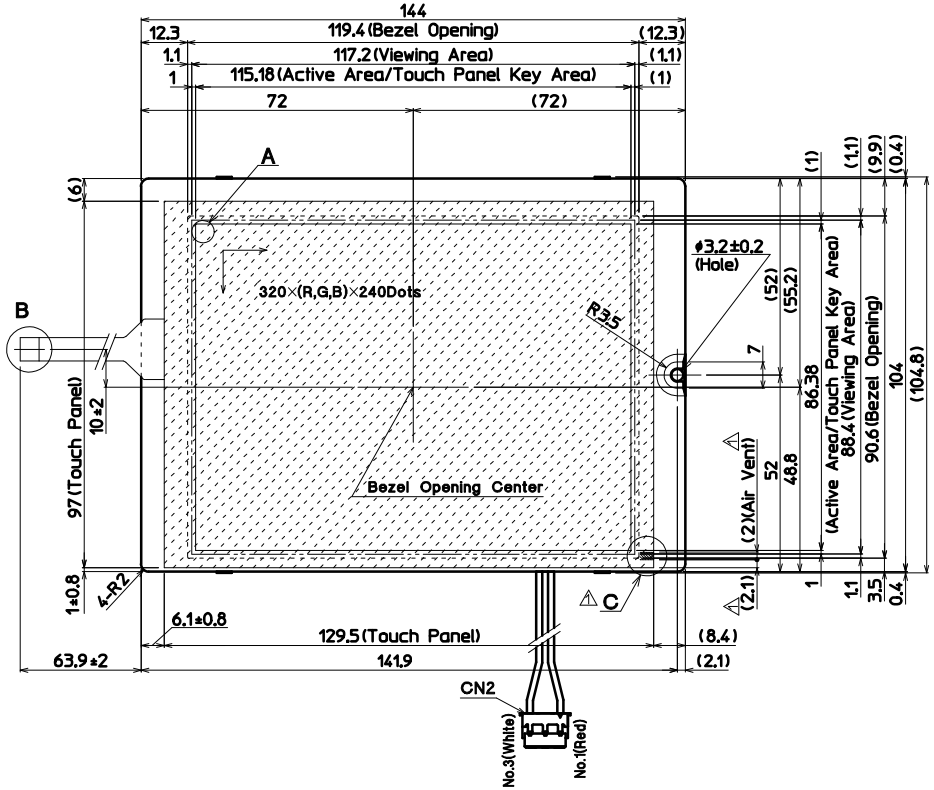

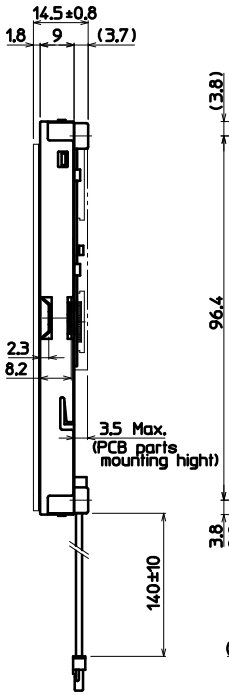

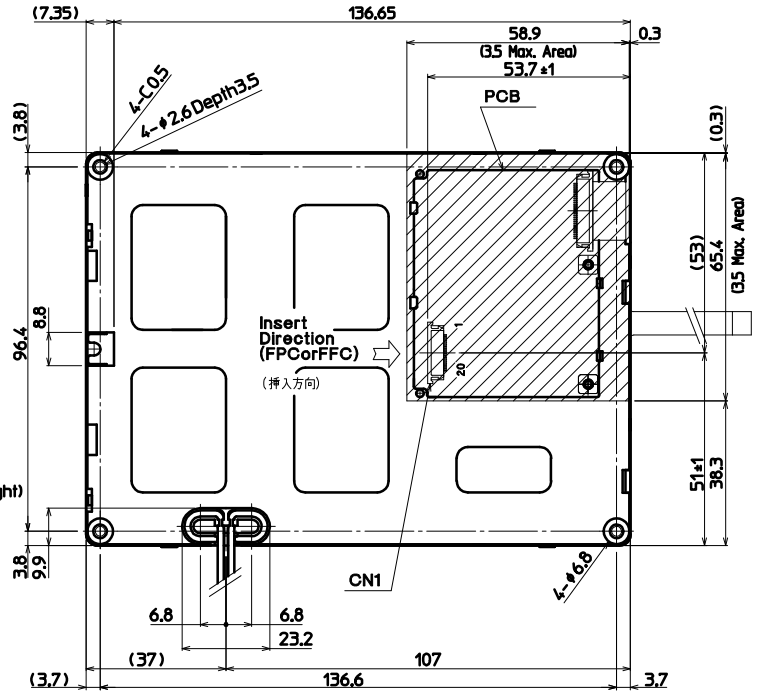

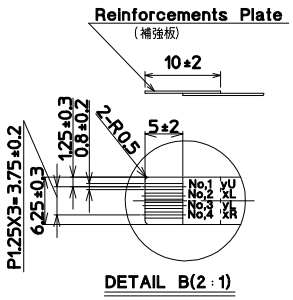

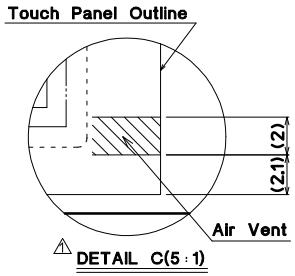

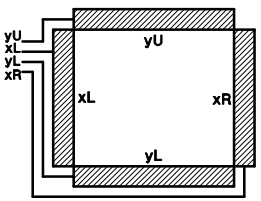

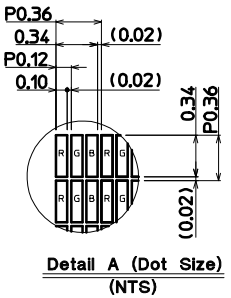

(Note.)
1. Connector CN1:08-6210-020-340-800(ELCO)
(コネクター) CN2:BHR-03VS-1(JST)
2. Matching Connector CN2:SM02-(8.0)B-BHS-1(JST)
(適合コネクター)
3. Recommended Matching Connecter(Touch Panel)
(タッチパネルインターフェース推奨コネクター)
:Series 6216(ELCO) :Series FE,FFS(JST)
:Series SFD(FCI)
4. The drawing is the front view of the LCD. Information is displayed starting at the upper left hand corner, moving right then down to the lower right hand corner.
(LCDの正面図において、画像データの表示は左上コーナーから始まり、右へ進み下へ送られ右下コーナーへ向かう。)
5. Tolerance without indication : ±0.5
(指示無き公差)

Material 材質	Treatment 処理	Approved	Checked	Checked	Drawn	Scale	Title		Year-Month-Day	Size
		'02.10.09 竹本	'02.10.08 朝倉	'02.10.08 阿部	今村	1:1(2:1,NTS)	KCG057QV1DC	KYOCERA	'02.10.08	2
Quantity 製作数	Description; 備考 02006AAA						Outline Dimensions	Drawing No.	121A5019400-1	

SPEC.NO.	TQ3C-8EAC0-E2CUP18-00
DATE	December 2, 2002

FOR: _____

KYOCERA INSPECTION STANDARD

TYPE : KCG057QV1DC-G50

KYOCERA CORPORATION
KAGOSHIMA HAYATO PLANT
LCD DIVISION

Original	Designed by :Engineering Dept.			Confirmed by :QA Dept.	
Issue Data	Prepared	Checked	Approved	Checked	Approved
December 2, 2002	K. Baba	M. Fujitani	H. OHNO	Y. Yoshida	S. Hayashi

Revision Record

Date	Designed by: Engineering Dept.			Confirmed by: QA Dept.	
	Prepared	Checked	Approved	Checked	Approved

Rev. No.	Date	Page	Descriptions

Visuals specification

1)Note

Item	Note	
General	1.When defects specified in this Inspection Standards are inspected, operating voltage(Vop) shall be set at the level where optimized contrast is available. Display quality is applied up to effective viewing area. (Bi-Level INSPECTION) 2.This inspection standard about the image quality shall be applied to any defect within the effective viewing area and shall not be applicable to outside of the area. 3.Should any defects which are not specified in this standard happen, additional standard shall be determined by mutual agreement between customer and Kyocera. 4.Inspection conditions Luminance : 500 Lux minimum . Inspection distance : 300 mm (from the sample) Temperature : 25 ± 5 ℃ Direction : right above	
Definition of Inspection item	Pinhole, Bright spot Black spot, Scratch Foreign particle	The color of a small area is different from the remainder. The phenomenon does not change with voltage.
	Contrast variation	The color of a small area is different from the remainder. The phenomenon changes with voltage.
	Polarizer (Scratch, Bubble, Dent)	Scratch, Bubble and Dent in the polarizer which can be observed in on / off state.

2) Standard

<table>
<tr><th>Inspection item</th><th>Judgement standard</th></tr>
<tr><td>Pinhole, Bright spot
Black spot,
Foreign particle
(LCD portion)</td><td>
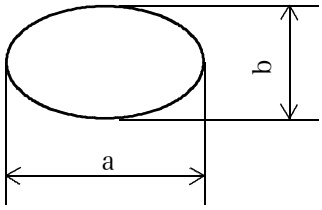

d = (a + b) / 2
<table>
<tr><th>Category</th><th>Size (mm)</th><th>Acceptable number</th></tr>
<tr><td>A</td><td>d ≦ 0.2</td><td>neglected</td></tr>
<tr><td>B</td><td>0.2 ＜ d ≦ 0.3</td><td>5</td></tr>
<tr><td>C</td><td>0.3 ＜ d ≦ 0.5</td><td>3</td></tr>
<tr><td>D</td><td>0.5 ＜ d</td><td>0</td></tr>
</table>
</td></tr>
<tr><td>Scratch,Foreign particle
(LCD portion)</td><td>
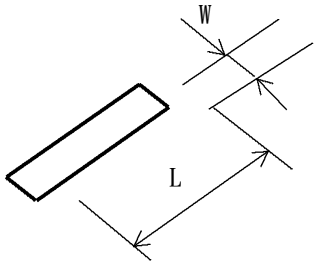

<table>
<tr><th></th><th>Width (mm)</th><th>Length (mm)</th><th>Acceptable No.</th></tr>
<tr><td>A</td><td>W ≦ 0.03</td><td>—</td><td>neglected</td></tr>
<tr><td>B</td><td rowspan="3">0.03＜ W ≦0.1</td><td>L ≦ 2.0</td><td>neglected</td></tr>
<tr><td>C</td><td>2.0 ＜ L ≦ 4.0</td><td>3</td></tr>
<tr><td>D</td><td>4.0 ＜ L</td><td>0</td></tr>
<tr><td>E</td><td>0.1 ＜ W</td><td>—</td><td>According to
’ Circular ’</td></tr>
</table>
</td></tr>
<tr><td>Contrast variation</td><td>
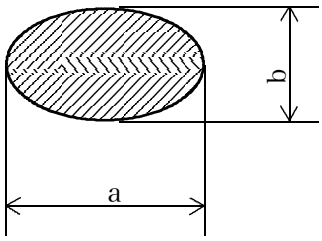

d = (a + b) / 2
<table>
<tr><th>Category</th><th>Size (mm)</th><th>Acceptable number</th></tr>
<tr><td>A</td><td>d ≦ 0.5</td><td>neglected</td></tr>
<tr><td>B</td><td>0.5 ＜ d ≦ 0.7</td><td>3</td></tr>
<tr><td>C</td><td>0.7 ＜ d</td><td>0</td></tr>
</table>
</td></tr>
</table>

Inspection item	Judgement standard
Polarizer (Scratch, Bubble, Dent)	(1) Scratch 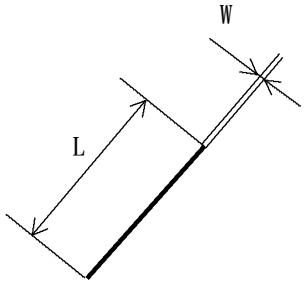

	Width (mm)	Length (mm)	Acceptable No.
A	W ≦ 0.1	—	neglected
B	0.1 < W ≦0.3	L ≦ 5.0	neglected
C		5.0 < L	0
D	0.3 < W	—	0

(2)Bubble (dent)

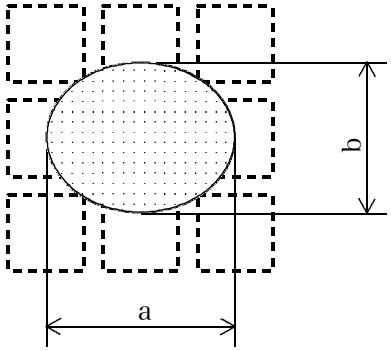

d = (a + b) / 2

Category	Size (mm)	Acceptable number
A	d ≦ 0.2	neglected
B	0.2 < d ≦ 0.3	5
C	0.3 < d ≦ 0.5	3
D	0.5 < d	0

<table>
<tr><th>Inspection item</th><th>Judgement standard</th></tr>
<tr><td>Scratch,
Foreige particle
(Touch Screen portion)</td><td>
(D = Average Diameter = (major axis + minor axis)／2
<table>
<tr><th></th><th>Width(mm)</th><th>Length(mm)</th><th>Acceptable No.</th></tr>
<tr><td rowspan="4">Scratch</td><td>0.1≧W＞0.08</td><td>4≧L</td><td>1pcs within φ30mm</td></tr>
<tr><td>0.08≧W＞0.05</td><td>6≧L</td><td>2pcs within φ20mm</td></tr>
<tr><td>0.05≧W＞0.03</td><td>10≧L</td><td>2pcs within φ20mm</td></tr>
<tr><td>0.03≧W</td><td>20≧L</td><td>neglected</td></tr>
<tr><td rowspan="2">Foreige (line like)</td><td>0.1≧W＞0.05</td><td>5≧L</td><td>2pcs within φ30mm</td></tr>
<tr><td>0.05≧W</td><td>neglected</td><td>neglected</td></tr>
<tr><td rowspan="2">Foreige (circle like)</td><td colspan="2">0.3≧D＞0.2</td><td>2pcs within φ30mm</td></tr>
<tr><td colspan="2">0.2≧D</td><td>neglected</td></tr>
</table>
Above are applied to the visible area.
Unless there are foreign particles and damage affected seriously to the electrical performance in the visible area, we approve of this product.
</td></tr>
<tr><td>Glass crack
(Touch Screen portion)</td><td>
<table>
<tr><td rowspan="4">Judgement standard</td><td colspan="3">Corner crack
 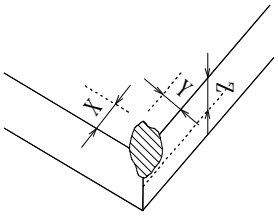 </td><td colspan="3">Cracks in other area than in corner
 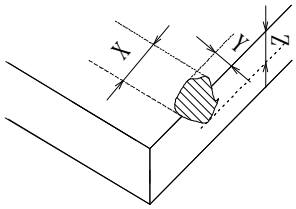 </td></tr>
<tr><td>X</td><td>Y</td><td>Z</td><td>X</td><td>Y</td><td>Z</td></tr>
<tr><td>≦3</td><td>≦3</td><td><t</td><td>≦5</td><td>≦1.5</td><td><t</td></tr>
<tr><td colspan="3">2pcs/panel</td><td colspan="3">2pcs/side</td></tr>
</table>
<table>
<tr><td rowspan="2">Judgement standard</td><td>Progressive crack
 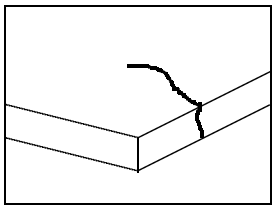 </td></tr>
<tr><td>0pcs(NG even 1pcs)</td></tr>
</table>
Above are applied to the visible area.
Unless there are foreign particles and damage affected seriously to the electrical performance in the visible area, we approve of this product.
</td></tr>
</table>