SPEC

Spec No.	TQ3C-8EAF0-E1DDP60-00
Date	September 17, 2008

TYPE : TCG057VGLBB-H50

< 5.7 inch VGA transmissive color TFT
with LED backlight and touch panel >

CONTENTS

1. Application
2. Construction and outline
3. Mechanical specifications
4. Absolute maximum ratings
5. Electrical characteristics
6. Optical characteristics
7. Interface signals
8. Input timing characteristics
9. Backlight characteristics
10. Design guidance for analog touch panel (T/P)
11. Lot number identification
12. Warranty
13. Precautions for use
14. Reliability test data
15. Outline drawing

Issued
Date : Oct. 1, 2008
KYOCERA
Hayato LCD Division

KYOCERA CORPORATION
KAGOSHIMA HAYATO PLANT
LCD DIVISION

This specification is subject to change without notice.
Consult Kyocera before ordering.

Original Issue Date	Designed by: Engineering dept.			Confirmed by: QA dept.	
	Prepared	Checked	Approved	Checked	Approved
September 17,2008	Y. Asano	H.Tokumori	Y.Matsumoto	J.Sakaguchi	

Warning

1. This Kyocera LCD module has been specifically designed for use only in electronic devices and industrial machines in the area of audio control, office automation, industrial control, home appliances, etc. The module should not be used in applications where the highest level of safety and reliability are required and module failure or malfunction of such module results in physical harm or loss of life, as well as enormous damage or loss. Such fields of applications include, without limitation, medical, aerospace, communications infrastructure, atomic energy control. Kyocera expressly disclaims any and all liability resulting in any way to the use of the module in such applications.

2. Customer agrees to indemnify, defend and hold Kyocera harmless from and against any and all actions, claims, damages, liabilities, awards, costs, and expenses, including legal expenses, resulting from or arising out of Customer's use, or sale for use, or Kyocera modules in applications.

Caution

1. Kyocera shall have the right, which Customer hereby acknowledges, to immediately scrap or destroy tooling for Kyocera modules for which no Purchase Orders have been received from the Customer in a two-year period.

Revision record

Date	Designed by : Engineering dept.			Confirmed by : QA dept.	
	Prepared	Checked	Approved	Checked	Approved

Rev.No.	Date	Page	Descriptions

1. Application

This document defines the specification of TCG057VGLBB-H50. (RoHS Compliant)

2. Construction and outline

LCD	: Transmissive color dot matrix type TFT
Backlight system	: LED
Polarizer	: Glare Low-reflection treatment
Additional circuit	: Timing controller, Power supply (3.3V input) (without constant current circuit for LED backlight)
Touch panel	: Analog type, Non-Glare treatment

3. Mechanical specifications

3-1. Mechanical specifications of LCD

Item	Specification	Unit
Outline dimensions	127.2 (W)× 100.4 (H) ×6.75 (D)	mm
Active area	115.2 (W) × 86.4 (H) (14.4cm / 5.7 inch (Diagonal))	mm
Dot format	640×(B,G,R) (W) × 480 (H)	dot
Dot pitch	0.06 (W) × 0.18 (H)	mm
Base color *1	Normally White	-
Mass	(TBD)	g

*1 Due to the characteristics of the LCD material, the color varies with environmental temperature.

3-2. Mechanical specifications of touch panel

Item	Specification	Unit
Input	Radius-0.8 stylus or Finger	-
Actuation Force	0.05～0.8	N
Transmittance	Typ. 79	%
Surface hardness	Pencil hardness 2H or more according	-
Anti newton's ring treatment	None	-

4. Absolute maximum ratings

4-1. Electrical absolute maximum ratings

Item		Symbol	Min.	Max.	Unit
Supply voltage for logic		V_{DD}	0	4.0	V
Input signal voltage	*1	V_{IN}	-0.3	6.0	V
LED forward current	*2	IF	-	30	mA
Reversed voltage	*2	VR	-	5	V
Supply voltage for touch panel		V_{TP}	0	6.0	V
Input current of touch panel		I_{TP}	0	0.5	mA

*1 Input signal : CK, R0～R5, G0～G5, B0～B5, H_{SYNC}, V_{SYNC}, ENAB, R/L, U/D
*2 For each “AN1-CA1”, “AN2-CA2”, “AN3-CA3” and “AN4-CA4” Temp. = 25°C

4-2. Environmental absolute maximum ratings

Item		Symbol	Min.	Max.	Unit
Operating temperature	*1	T_{OP}	-20	70	°C
Storage temperature	*2	T_{STO}	-30	80	°C
Operating humidity	*3	H_{OP}	10	*4	%RH
Storage humidity	*3	H_{STO}	10	*4	%RH
Vibration		-	*5	*5	-
Shock		-	*6	*6	-

*1 Operating temperature means a temperature which operation shall be guaranteed. Since display performance is evaluated at 25°C, another temperature range should be confirmed.
*2 Temp. = -30°C＜48h , Temp. = 80°C＜168h
Store LCD panels at normal temperature/humidity. Keep them free from vibration and shock. An LCD panel that is kept at a low or a high temperature for a long time can be defective due to other conditions, even if the low or high temperature satisfies the standard.
(Please refer to “Precautions for Use” for details.)
*3 Non-condensing
*4 Temp.≦40°C, 85%RH Max.
Temp.＞40°C, Absolute humidity shall be less than 85%RH at 40°C.
*5

Frequency	10～55 Hz	Acceleration value (0.3～9 m/s^2)
Vibration width	0.15mm	
Interval	10-55-10 Hz 1 minutes	

2 hours in each direction X, Y, Z (6 hours total)
EIAJ ED-2531
*6 Acceleration: 490 m/s^2, Pulse width: 11 ms
3 times in each direction: ±X, ±Y, ±Z
EIAJ ED-2531

5. Electrical characteristics

5-1. LCD

Temp. = -20～70°C

Item	Symbol	Condition	Min.	Typ.	Max.	Unit
Supply voltage for logic *1	V_{DD}	-	3.0	3.3	3.6	V
Current consumption for logic	I_{DD}	*2	-	170	220	mA
Permissive input ripple voltage	V_{RP}	-	-	-	100	mVp-p
Input signal voltage *3	V_{IL}	"Low" level	0	-	$0.3V_{DD}$	V
	V_{IH}	"High" level	$0.7V_{DD}$	-	V_{DD}	V

*1 V_{DD}-turn-on conditions

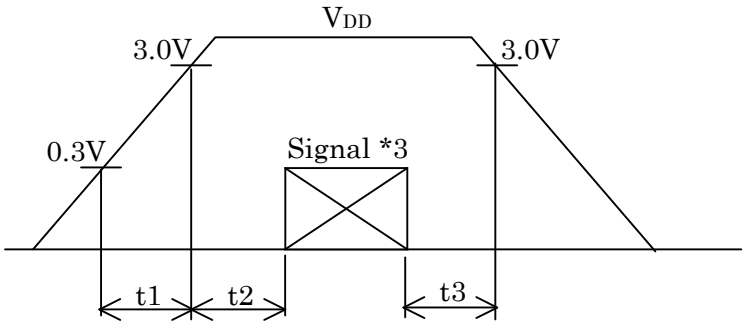

0＜t1≦20ms

0＜t2≦50ms

0＜t3≦1s

*2 Display pattern:

V_{DD} = 3.3V, Temp. = 25°C

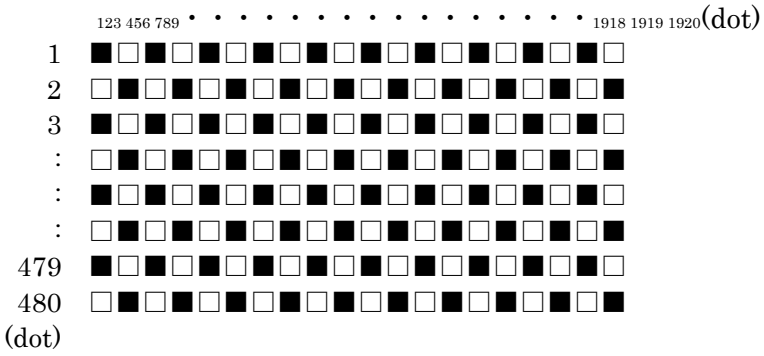

*3 Input signal : CK, R0～R5, G0～G5, B0～B5, H_{SYNC}, V_{SYNC}, ENAB, R/L, U/D

5-2. Touch panel

Item	Specification
Supply voltage for touch panel	5.0V
Terminal resistance	xL～xR : 200Ω～1,000Ω
	yU～yL : 200Ω～800Ω
Linearity	less than ±2.0%
Insulation resistance	100MΩ or more at DC25V

6. Optical characteristics

Measuring spot = ϕ 6.0mm, Temp. = 25°C

Item		Symbol	Condition	Min.	Typ.	Max.	Unit
Response time	Rise	τ_r	$\theta = \phi = 0°$	-	10	-	ms
	Down	τ_d	$\theta = \phi = 0°$	-	25	-	ms
Viewing angle range View direction : 6 o'clock (Gray inversion)		θ UPPER	CR≧5	-	80	-	deg.
		θ LOWER		-	80	-	
		ϕ LEFT		-	80	-	deg.
		ϕ RIGHT		-	80	-	
Contrast ratio		CR	$\theta = \phi = 0°$	300	500	-	-
Brightness		L	IF=15mA/Line	(200)	(290)	-	cd/m²
Chromaticity coordinates	Red	x	$\theta = \phi = 0°$	0.56	0.61	0.66	-
		y		0.32	0.37	0.42	
	Green	x	$\theta = \phi = 0°$	0.29	0.34	0.39	
		y		0.52	0.57	0.62	
	Blue	x	$\theta = \phi = 0°$	0.09	0.14	0.19	
		y		0.06	0.11	0.16	
	White	x	$\theta = \phi = 0°$	0.28	0.33	0.38	
		y		0.30	0.35	0.40	

6-1. Definition of contrast ratio

$$\text{CR(Contrast ratio)} = \frac{\text{Brightness with all pixels "White"}}{\text{Brightness with all pixels "Black"}}$$

6-2. Definition of response time

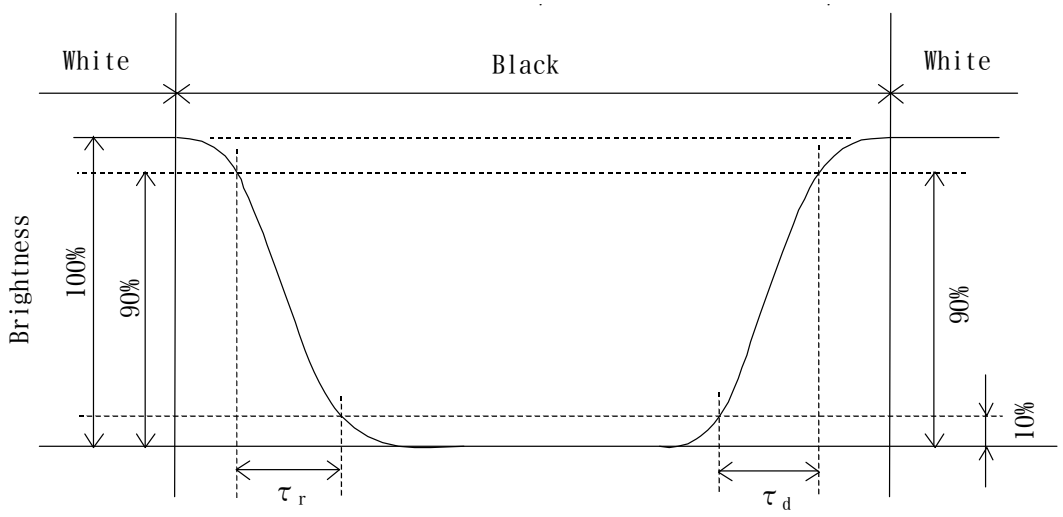

6-3. Definition of viewing angle

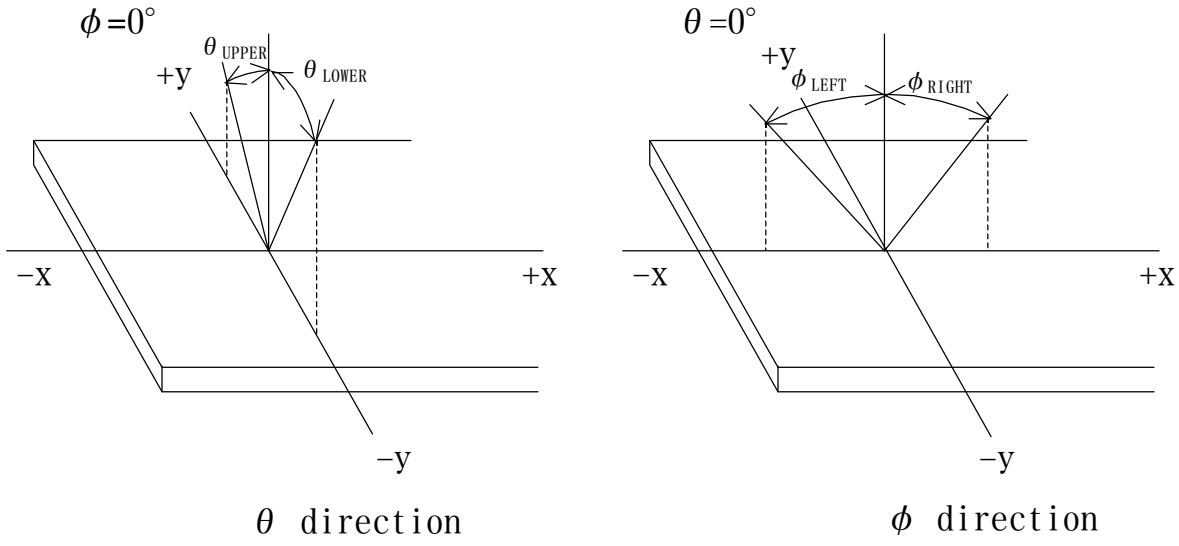

6-4. Brightness measuring points

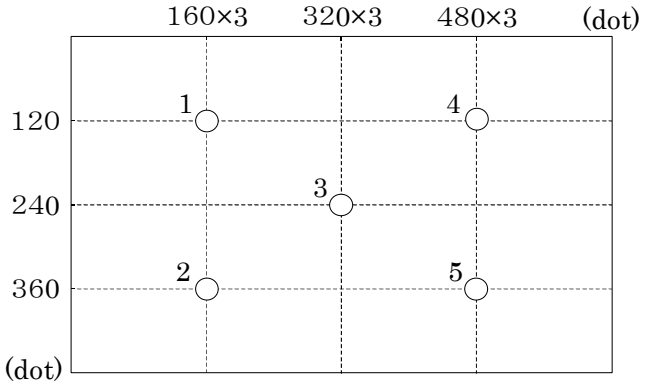

1) Rating is defined on the average in the viewing area.
2) Measured 30 minutes after the LED is powered on. (Ambient temp. = 25°C)

7. Interface signals

7-1. Pin assignment of LCD panel and LED

No.	Symbol	Description	I/O	Note
1	GND	GND	-	
2	CK	Clock signal for sampling each data signal	I	
3	H_{SYNC}	Horizontal synchronous signal (negative)	I	
4	V_{SYNC}	Vertical synchronous signal (negative)	I	
5	GND	GND	-	
6	R0	RED data signal (LSB)	I	
7	R1	RED data signal	I	
8	R2	RED data signal	I	
9	R3	RED data signal	I	
10	R4	RED data signal	I	
11	R5	RED data signal (MSB)	I	
12	GND	GND	-	
13	G0	GREEN data signal (LSB)	I	
14	G1	GREEN data signal	I	
15	G2	GREEN data signal	I	
16	G3	GREEN data signal	I	
17	G4	GREEN data signal	I	
18	G5	GREEN data signal (MSB)	I	
19	GND	GND	-	
20	B0	BLUE data signal (LSB)	I	
21	B1	BLUE data signal	I	
22	B2	BLUE data signal	I	
23	B3	BLUE data signal	I	
24	B4	BLUE data signal	I	
25	B5	BLUE data signal (MSB)	I	
26	GND	GND	-	
27	ENAB	Signal to settle the horizontal display position (positive)	I	*1
28	V_{DD}	3.3V power supply	-	
29	V_{DD}	3.3V power supply	-	
30	R/L	Horizontal display mode select signal L : Normal , H : Left / Right reverse mode	I	*2
31	U/D	Vertical display mode select signal H : Normal , L : Up / Down reverse mode	I	*2
32	NC	No connect	-	
33	CA1	Cathode 1	-	
34	CA2	Cathode 2	-	
35	CA3	Cathode 3	-	
36	CA4	Cathode 4	-	
37	AN1	Anode 1	-	
38	AN2	Anode 2	-	
39	AN3	Anode 3	-	
40	AN4	Anode 4	-	

LCD connector : IMSA-9681S-40A-GF (IRISO)
Recommended matching FFC or FPC : 0.5mm pitch

*1 The horizontal display start timing is settled in accordance with a rising timing of ENAB signal.
In case ENAB is fixed "Low", the horizontal start timing is determined.
Don't keep ENAB "High" during operation.

*2

R/L = L
U/D = H

R/L = H
U/D = H

R/L = L
U/D = L

R/L = H
U/D = L

7-2. Pin assignment of touch panel

No.	Symbol	Description
1	yL	y-Lower terminal
2	xL	x-Left terminal
3	yU	y-Upper terminal
4	xR	x-Right terminal

Touch panel side connector : 1.25mm pitch
Recommended matching connector : Series FE, FFS (JST)
: KCA-K4R (DMC)

8. Input timing characteristics

8-1. Timing characteristics

Item		Symbol	Min	Typ	Max	Unit	Note
Clock	Frequency	1/Tc	22.66	25.18	27.69	MHz	
	Duty ratio	Tch/Tc	40	50	60	%	
Data	Set up time	Tds	10	–	–	ns	
	Hold time	Tdh	10	–	–	ns	
Horizontal sync. signal	Cycle	TH	30.0	31.8	–	μs	
			770	800	850	clock	
	Pulse width	THp	5	30	–	clock	
	Set up time	THs	10	–	–	ns	
	Hold time	THh	10	–	–	ns	
Vertical sync. signal	Cycle	TV	515	525	535	line	ENAB=L
			515	525	560	line	ENAB=H
	Pulse width	TVp	1	3	5	line	
	Set up time	TVs	10	–	–	ns	
	Hold time	TVh	10	–	–	ns	
Enable signal (ENAB)	Pulse width	TEp	640			clock	
	Set up time	TEs	10	–	–	ns	
	Hold time	TEh	10	–	–	ns	
H_{SYNC} - Enable signal phase difference		THE	112	144	175	clock	
H_{SYNC} - V_{SYNC} signal phase difference		THV	0	–	4	clock	ENAB=L
			10	–	–	ns	ENAB=H
Vertical sync. signal start position		TVE	2	35	76	line	
Horizontal display period		THd	640			clock	
Vertical display period		TVd	480			line	

*When ENAB is fixed at "Low", the horizontal display starts from the data of C144 (clock) as shown in 8-3.
*When ENAB is fixed at "Low", the vertical sync. signal start position is 35 (line) as shown in 8-3.
*In case of lower frequency, the deterioration of the display quality, flicker etc., may occur.

8-2. Input Data Signals and Display position on the screen

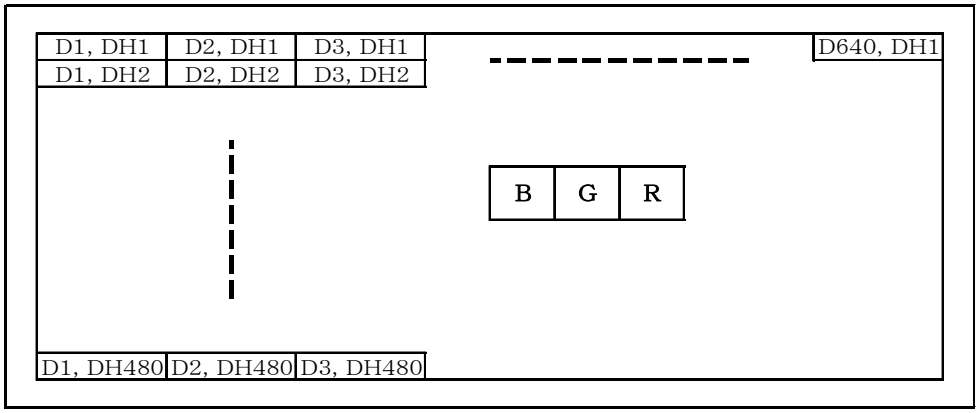

8-3. Input timing characteristics

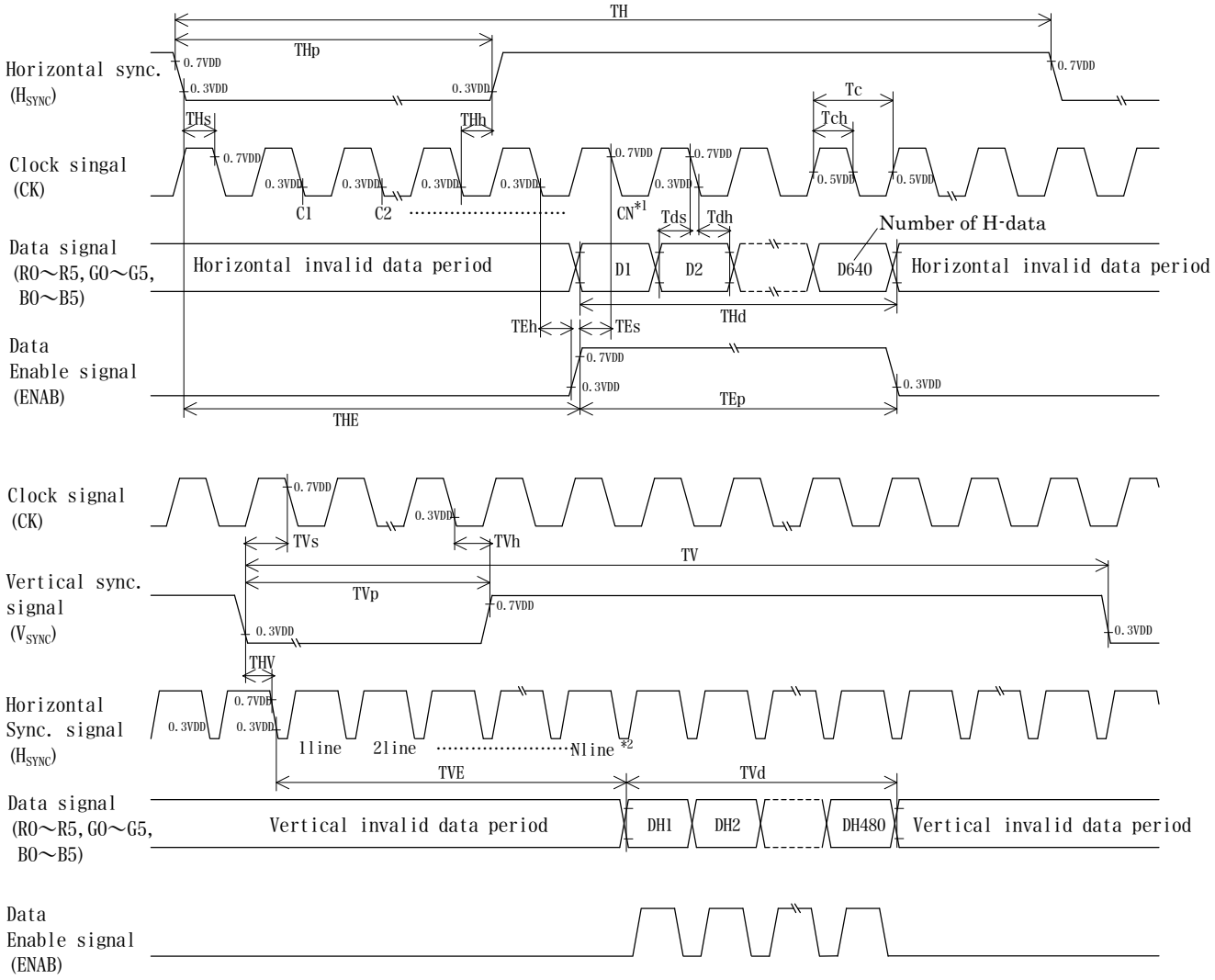

*1 When ENAB is fixed at "Low", the horizontal display starts from the data of C144 (clock).

*2 When ENAB is fixed at "Low", the vertical sync. signal start position is 35 (line).

9. Backlight characteristics

LED ratings

Item		Symbol	Min.	Typ.	Max.	Unit	Note
Forward current	*1	IF	-	15	-	mA	Ta=-20～70°C
Forward voltage	*1	VF	-	22.1	25.0	V	IF=15mA, Ta=-20°C
			-	21.7	24.5	V	IF=15mA, Ta=25°C
			-	21.3	24.1	V	IF=15mA, Ta=70°C
Operating life time	*2, *3	T	-	37,000	-	h	IF=15mA, Ta=25°C

*1 For each “AN1-CA1”, “AN2-CA2”, “AN3-CA3” and “AN4-CA4”

*2 When brightness decrease 50% of initial brightness.

*3 Life time is estimated data. (Condition : IF=15mA, Ta=25°C in chamber).

* An input current below 5.0mA may reduce the brightness uniformity of the LED backlight. This is because the amount of light from each LED chip is different. Therefore, please evaluate carefully before finalizing the input current.

10. Design guidance for analog touch panel (T/P)

10-1 Electrical (In customer's design, please remember the following considerations.)

1 Do not use the current regulated circuit.

2 Keep the current limit with top and bottom layer. (Please refer to “Electrical absolute maxim um ratings” for details.)

3 Analog T/P can not sense two points touching separately.

4 A contact resistance is appeared at the touch point between top and bottom layer. After this resistance has stable read of the T/P position data.

5 Because noise of inverter or peripheral circuits may interfere signal of touch panel itself it is necessary to design carefully in advance to avoid these noise problem.

10-2 Software

1 Do the "User Calibration".

2 "User Caribration" may be needed with long term using. Include "User Caribration" menu in your software.

3 When drawing a line with a stylus, there may be a slight discontinuity when the stylus passes over a spacer-dot. If necessary, please provide a compensation feature within your software.

10-3 Mounting on display and housing bezel

1 Do not use an adhesive tape to bond it on the front of T/P and hang it to the housing bezel.

2 Never expand the T/P top layer (PET-film) like a balloon by internal air pressure. The life of the T/P will be extremely short.

3 If a dew will be on the heat-sealed area or exposed traces at the end of a flexible tail, the migration of silver can occur. This will cause sometimes a short circuit.

11. Lot number identification

The lot number shall be indicated on the back of the backlight case of each LCD.

TCG057VGLBB-H50 - □□ - □□ - □ MADE IN □□□□□

↓↓ ↓ ↓ ↓

1 2 3 4 5

No1. - No5. above indicate
1. Year code
2. Month code
3. Date
4. Version Number
5. Country of origin (Japan or China)

Year	2008	2009	2010	2011	2012	2013
Code	8	9	0	1	2	3

Month	Jan.	Feb.	Mar.	Apr.	May	Jun.
Code	1	2	3	4	5	6

Month	Jul.	Aug.	Sep.	Oct.	Nov.	Dec.
Code	7	8	9	X	Y	Z

12. Warranty

12-1. Incoming inspection

Please inspect the LCD within one month after your receipt.

12-2. Production warranty

Kyocera warrants its LCD's for a period of 12 months from the ship date. Kyocera shall, by mutual agreement, replace or re-work defective LCD's that are shown to be Kyocera's responsibility.

13. Precautions for use

13-1. Installation of the LCD

1) The LCD shall be installed so that there is no pressure on the LSI chips.
2) The LCD shall be installed flat, without twisting or bending.
3) Must maintain a gap between inside of bezel and touch panel to avoid malfunction or electrode damage of touch panel.

13-2. Static electricity

1) Since CMOS ICs are mounted directly onto the LCD glass, protection from static electricity is required.
2) Workers should use body grounding. Operator should wear ground straps.

13-3. LCD operation

1) The LCD shall be operated within the limits specified. Operation at values outside of these limits may shorten life, and/or harm display images.

13-4. Storage

1) The LCD shall be stored within the temperature and humidity limits specified.
Store in a dark area, and protect the LCD from direct sunlight or fluorescent light.
2) Always store the LCD so that it is free from external pressure onto it.

13-5. Usage

1) DO NOT store in a high humidity environment for extended periods. Polarizer degradation bubbles, and/or peeling off of the polarizer may result.
2) Do not push or rub the touch panel's surface with hard to sharp objects such as knives, or the touch panel may be scratched.
3) When the touch panel is dirty, gently wipe the surface with a soft cloth, sometimes moistened by mild detergent or alcohol. If a hazardous chemical is dropped on the touch panel by mistake, wipe it off right away to prevent human contact.
4) Touch panel edges are sharp. Handle the touch panel with enough care to prevent cuts
5) Always keep the LCD free from condensation during testing. Condensation may permanently spot or stain the polarizer.
6) Do not disassemble LCD module because it will result in damage.
7) This Kyocera LCD module has been specifically designed for use in general electronic devices, but not for use in a special environment such as usage in an active gas. Hence, when the LCD is supposed to be used in a special environment, evaluate the LCD thoroughly beforehand and do not expose the LCD to chemicals such as an active gas.
8) Please do not use solid-base image pattern for long hours because a temporary afterimage may appear. We recommend using screen saver etc. in cases where a solid-base image pattern must be used.
9) Liquid crystal may leak when the module is broken. Be careful not to let the fluid go into your eyes and mouth. In the case the fluid touches your body; rinse it off right away with water and soap.

14. Reliability test data

Test item	Test condition	Test time	Judgement
High temp. atmosphere	80°C	240h	Display function : No defect Display quality : No defect Current consumption : No defect
Low temp. atmosphere	-30°C	240h	Display function : No defect Display quality : No defect Current consumption : No defect
High temp. humidity atmosphere	40°C 90% RH	240h	Display function : No defect Display quality : No defect Current consumption : No defect
Temp. cycle	-30°C 0.5h R.T. 0.5h 80°C 0.5h	10cycles	Display function : No defect Display quality : No defect Current consumption : No defect
High temp. operation	70°C	500h	Display function : No defect Display quality : No defect Current consumption : No defect
Point Activation life	Polyacetal stylus (R0.8) Hitting force 3N Hitting speed 2 time/s	one million times	Terminal resistance : No defect Insulation resistance : No defect Linearity : No defect Actuation Force : No defect

* Each test item uses a test LCD only once. The tested LCD is not used in any other tests.

* The LCD is tested in circumstances in which there is no condensation.

* The reliability test is not an out-going inspection.

* The result of the reliability test is for your reference purpose only.
The reliability test is conducted only to examine the LCD's capability.

No	Description	Drawn	Checked	Checked	Approved
⚠	·Add DETAIL E.	'07.12.01 倉元	'07.12.02 鶴崎		'07.12.03 南

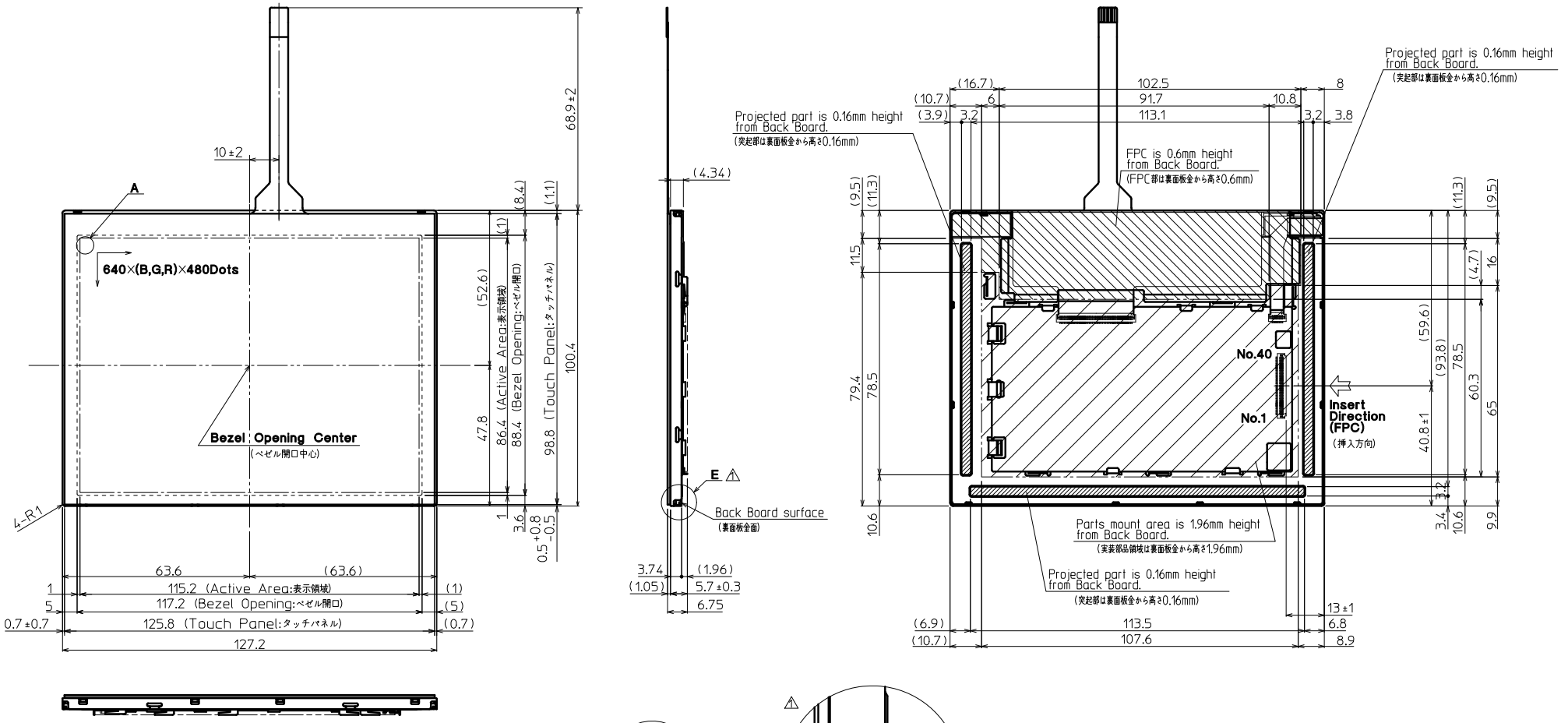

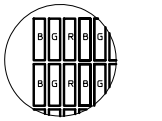

DETAIL A (Dot Size)
(NTS)

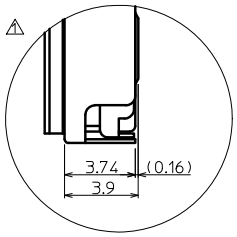

DETAIL E (5:1)

Note. (注記)
1. Connector CN1: IMSA-9681S-40A-GF (IRISO)
(コネクター)
2. The Information of LCD is displayed starting at the upper left hand corner, moving right then down to the lower right hand corner.
(LCDにおいて、画像データの表示は左上コーナーから始まり、右へ進み下へ送られ右下コーナーへ向かう。)
3. Tolerance without indication : ±0.5
(指示無き公差)

Material 材質	Treatment 処理	Approved '07.09.07	Checked	Checked '07.09.07	Drawn	Scale 1:1(5:1,NTS)	Title TCG057VGLBB	KYOCERA	Year-Month-Day '07.09.07	Size 2
Quantity 製作数	Description; 備考 RoHS	南		茶圓	倉元		Outline Dimensions	Drawing No. 121A5063100-1		1/2

No	Description	Drawn	Checked	Checked	Approved
⚠	·Rev.UP	'07.12.01 倉元	'07.12.02 鶴崎		'07.12.03 南

Note(注記)

	Name(名称)	Explanation(説明)
1	T.P.	Touch panel (タッチパネル)
2	T.P. Active Area (T.P.アクティブエリア)	Operating area of touch panel (タッチパネルの動作範囲)
3	T.P. Viewing Area (T.P.ビューイングエリア)	Warranty area of touch panel's appearance (タッチパネルの外観(傷・異物等)保証範囲)
		By giving pressure between the active area and the effective viewing area of the touch panel, there is a possibility that the touch panel will operate. (タッチパネルアクティブエリアとタッチパネルビューイングエリア間は荷重をかけた場合は、タッチパネルが動作する可能性があります。)

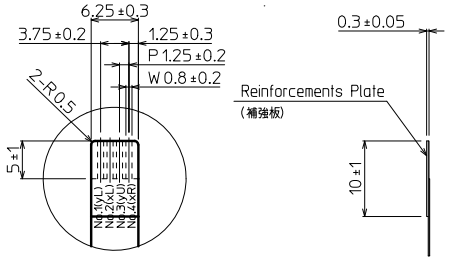

DETAIL B (2:1)

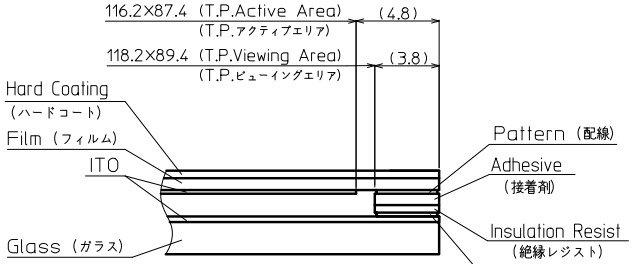

SECTION D–D(NTS)

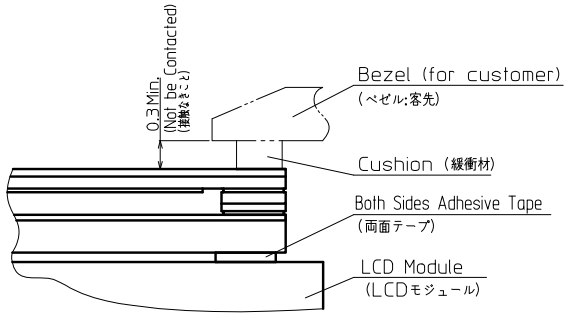

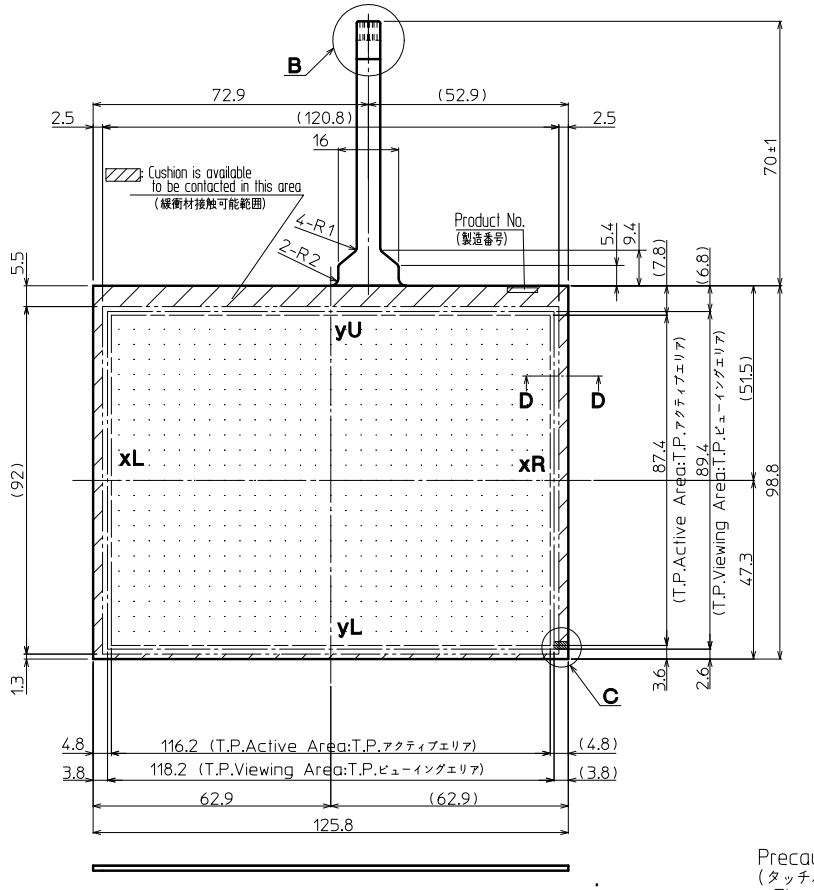

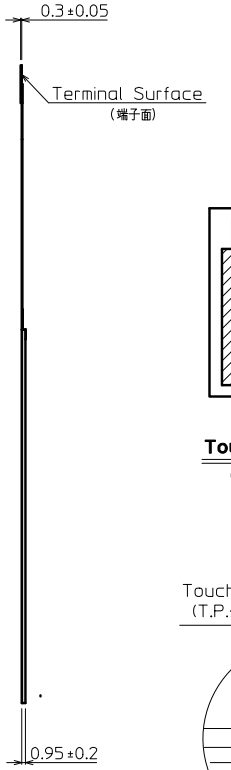

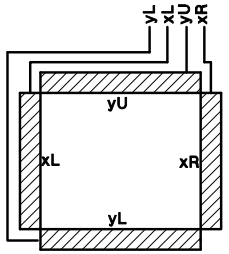

Touch Panel Pin–assign
(タッチパネルピンアサイン)

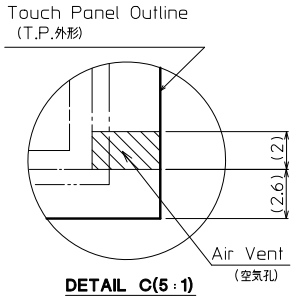

DETAIL C(5:1)

Precaution in use of touch panel.
(タッチパネル使用上の注意事項)

1.Fix touch panel at LCD module and the rear side of touch panel.
(タッチパネルの固定はLCDモジュール側とタッチパネル裏面とで行なうこと)

2.Must maintain a gap between inside of bezel and touch panel to avoid malfunction or electrode damage of touch panel.
(ベゼル内側とタッチパネルの接触厳禁。誤動作や電極破損の原因となります)

Precaution in use of touch panel.
(タッチパネル使用上の注意事項)

There is vent channel to equalize air pressure between the inner space of the touch panel and the atmosphere.

Please make sure it is not blocked by your housing and mounting method.
(タッチパネルの中には内圧と外圧を均一にするため通気孔を設けています。
取り付け時にこの通気孔を塞がないようにしてください。)

Material 材質	Treatment 処理	Approved	Checked	Checked	Drawn	Scale	Title		Year–Month–Day	Size
		'07.09.07		'07.09.07		1:1 (NTS)	TCG057VGLBB	KYOCERA	'07.09.07	2
Quantity 製作数	Description; 備考 RoHS	南		茶圓	倉元		Outline Dimensions	Drawing No.	121A5063100–1	2/2

No	Description	Drawn	Checked	Checked	Approved

※取り付け例(Installation guidance)

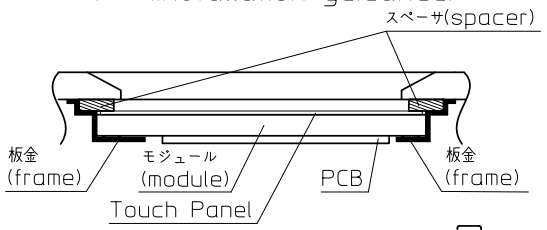

参考(for Reference)

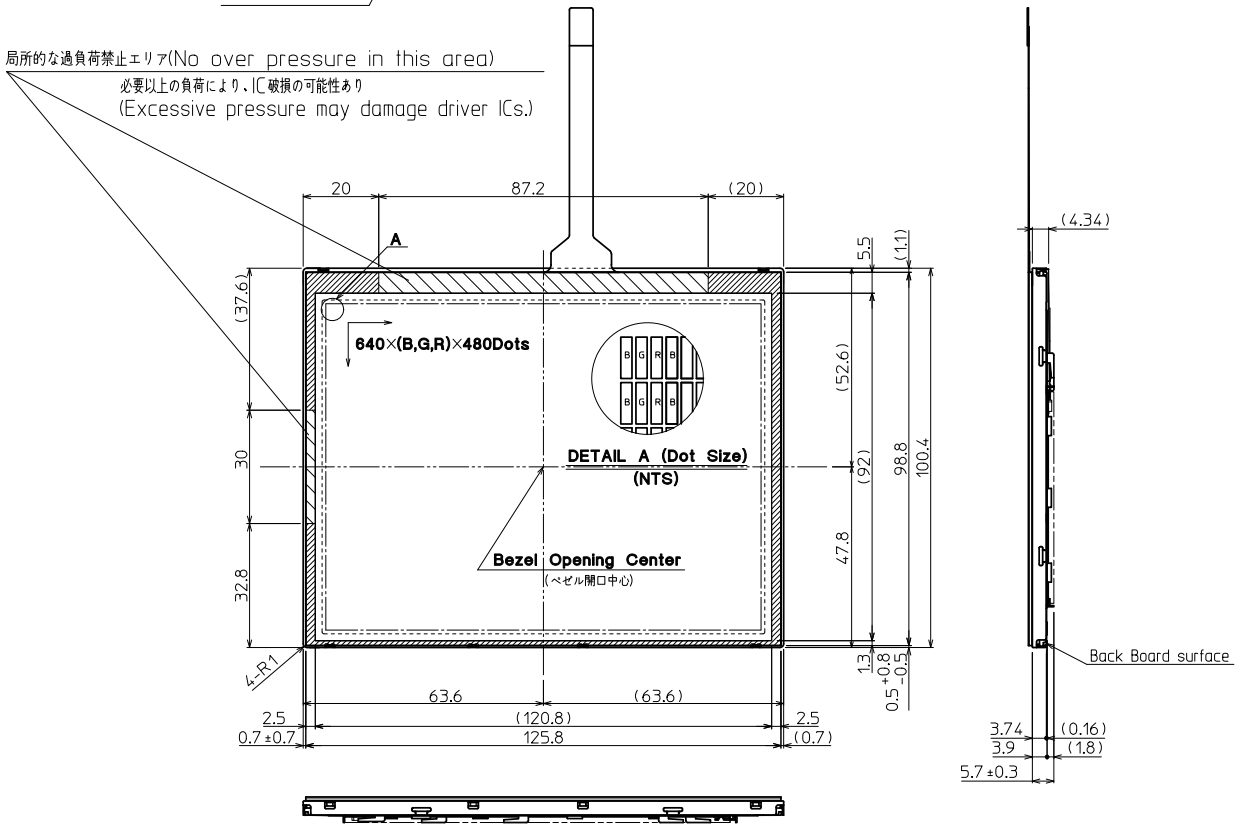

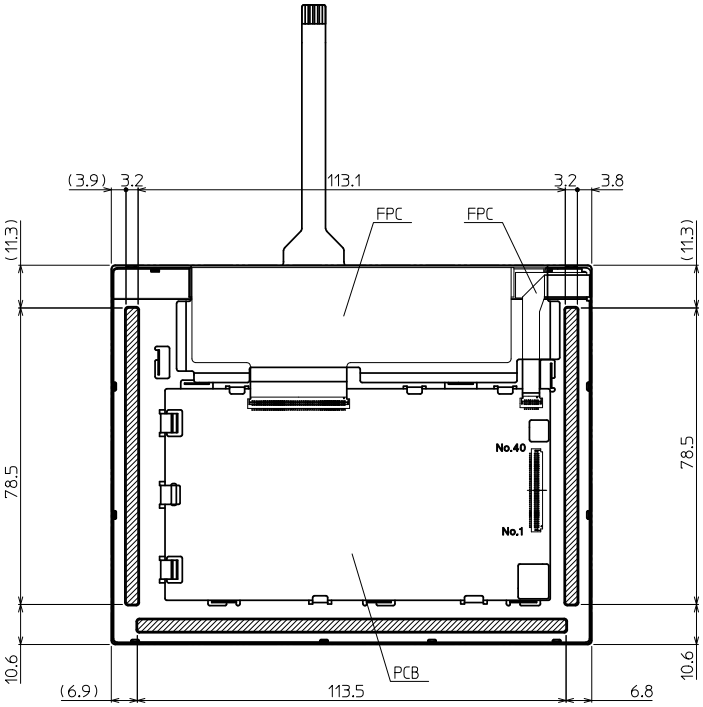

取り付け方法
(Installation of the LCD)

ケースにモジュールをはめ込み(X,Y固定)、裏面からZ方向を固定する事が可能。
(The LCD module shall be held in the X/Y direction by the housing, and in the Z direction using a backboard.)

斜線部の領域にて、下記の条件を満たし押さえることが望ましい。
(To hold the LCD module in place, it shall be supported with pressure applied to the hatched areas indicated by the descriptions below.)

押さえつけ可能領域
(Pressure may be applied in this area.)

押さえつけ可能領域。但し、局所的な過負荷禁止。
(No "point" over pressure is allowed.)

表面取り付け条件
(Installation conditions (Front side))

1.上辺長辺側、左短辺中央部に局所的な負荷がかからないように取り付けのこと
(1. The LCD shall be installed so that there is no point pressure applied in the middle of the left and upper border around the viewing area.)

2.広い範囲で均一に押さえることが望ましい
(2. The LCD shall be uniformly supported over as wide an area as possible.)

注記(Note)
指定外公差(Torelance without indication) :±0.5

裏面取り付け条件
(Installation conditions (Back side))

1.PCBへの接触無きこと
(1. Do not allow any foreign material to contact the PCB.)

2.FPCエリア押さえ不可
(2. Do not use any part of the FPC area to hold the LCD module in place)

3.PCB周りの板金突起部押さえ不可
(3. Do not apply pressure on the projected metal part of the PCB.)

4.モジュールがたわむこと無きよう押さえつけのこと
(4. Do not allow the LCD module to bend or twist.)

5.広い範囲で均一に押さえることが望ましい
(5. Support the LCD with uniform pressure over as wide an area as possible.)

Material 材質	Treatment 処理	Approved	Checked	Checked	Drawn	Scale	Title		Year-Month-Day	Size
		'08.03.25		'08.03.25		1:1(NTS)	TCG057VGLBB	KYOCERA	'08.03.23	2
Quantity 製作数	Description; 備考 RoHS	阿部		鶴崎	倉元		モジュール取り付け方法	Drawing No.	121A5068500	

Spec No.	TQ3C-8EAF0-E2DDP60-00
Date	September 17, 2008

KYOCERA INSPECTION STANDARD

TYPE : TCG057VGLBB-H50

KYOCERA CORPORATION
KAGOSHIMA HAYATO PLANT
LCD DIVISION

Original Issue Date	Designed by : Engineering dept.			Confirmed by : QA dept.	
	Prepared	Checked	Approved	Checked	Approved
September 17,2008	Y. Asano	H.Tokumori	Y.Matsumoto	J.Sakaguchi	

Revision record

Date	Designed by : Engineering dept.			Confirmed by : QA dept.	
	Prepared	Checked	Approved	Checked	Approved

Rev.No.	Date	Page	Descriptions

Visuals specification

1) Note

<table>
<tr><th></th><th colspan="3">Note</th></tr>
<tr><td>General</td><td colspan="3">1. Customer identified anomalies not defined within this inspection standard shall be reviewed by Kyocera, and an additional standard shall be determined by mutual consent.
2. This inspection standard about the image quality shall be applied to any defect within the active area and shall not be applicable to outside of the area.
3. Inspection conditions
Luminance : 500 Lux min.
Inspection distance : 300 mm.
Temperature : 25 ± 5℃
Direction : Directly above</td></tr>
<tr><td rowspan="6">Definition of inspection item</td><td rowspan="3">Dot defect</td><td>Bright dot defect</td><td>The dot is constantly “on” when power applied to the LCD, even when all “Black” data sent to the screen.
Inspection tool: 5% Transparency neutral density filter.
Count dot: If the dot is visible through the filter.
Don’t count dot: If the dot is not visible through the filter.
 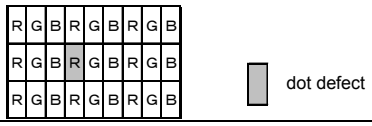
</td></tr>
<tr><td>Black dot defect</td><td>The dot is constantly “off” when power applied to the LCD, even when all “White” data sent to the screen.</td></tr>
<tr><td>Adjacent dot</td><td>Adjacent dot defect is defined as two or more bright dot defects or black dot defects.
 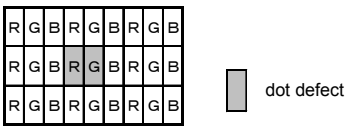
</td></tr>
<tr><td rowspan="2">External inspection</td><td>Bubble, Scratch, Foreign particle (Polarizer, Cell, Backlight)</td><td>Visible operating (all pixels “Black” or “White”) and non operating.</td></tr>
<tr><td>Appearance inspection</td><td>Does not satisfy the value at the spec.</td></tr>
<tr><td>Others</td><td>LED wire</td><td>Damaged to the LED wires, connector, pin, functional failure or appearance failure.</td></tr>
<tr><td>Definition of size</td><td colspan="2">Definition of circle size
 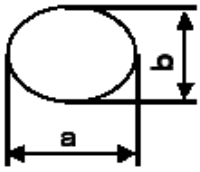

d = (a + b)/2
Definition of linear size
 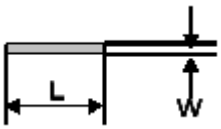
</td></tr>
</table>

2) Standard

<table>
<tr><th colspan="2">Classification</th><th colspan="2">Inspection item</th><th>Judgement standard</th></tr>
<tr><td rowspan="6">Defect (in LCD glass)</td><td rowspan="5">Dot defect</td><td colspan="2">Bright dot defect</td><td>Acceptable number : 4
Bright dot spacing : 5 mm or more</td></tr>
<tr><td colspan="2">Black dot defect</td><td>Acceptable number : 5
Bright dot spacing : 5 mm or more</td></tr>
<tr><td rowspan="2">2 dot join</td><td>Bright dot defect</td><td>Acceptable number : 2</td></tr>
<tr><td>Black dot defect</td><td>Acceptable number : 3</td></tr>
<tr><td colspan="2">3 or more dots join</td><td>Acceptable number : 0</td></tr>
<tr><td colspan="2">Total dot defects</td><td>Acceptable number : 5 Max</td></tr>
<tr><td>Others</td><td colspan="2">White dot, Dark dot (Circle)</td><td>
<table>
<tr><th>Size (mm)</th><th>Acceptable number</th></tr>
<tr><td>d ≦ 0.2</td><td>(Neglected)</td></tr>
<tr><td>0.2 ＜ d ≦ 0.4</td><td>5</td></tr>
<tr><td>0.4 ＜ d ≦ 0.5</td><td>3</td></tr>
<tr><td>0.5 ＜ d</td><td>0</td></tr>
</table>
</td></tr>
<tr><td rowspan="4">External inspection (Defect on Polarizer or between Polarizer and LCD glass)</td><td colspan="2">Polarizer (Scratch)</td><td>
<table>
<tr><th>Width (mm)</th><th>Length (mm)</th><th>Acceptable number</th></tr>
<tr><td>W ≦ 0.1</td><td>－</td><td>(Neglected)</td></tr>
<tr><td rowspan="2">0.1 ＜ W ≦ 0.3</td><td>L ≦ 5.0</td><td>(Neglected)</td></tr>
<tr><td>5.0 ＜ L</td><td>0</td></tr>
<tr><td>0.3 ＜ W</td><td>－</td><td>0</td></tr>
</table>
</td></tr>
<tr><td colspan="2">Polarizer (Bubble)</td><td>
<table>
<tr><th>Size (mm)</th><th>Acceptable number</th></tr>
<tr><td>d ≦ 0.2</td><td>(Neglected)</td></tr>
<tr><td>0.2 ＜ d ≦ 0.3</td><td>5</td></tr>
<tr><td>0.3 ＜ d ≦ 0.5</td><td>3</td></tr>
<tr><td>0.5 ＜ d</td><td>0</td></tr>
</table>
</td></tr>
<tr><td colspan="2">Foreign particle (Circular shape)</td><td>
<table>
<tr><th>Size (mm)</th><th>Acceptable number</th></tr>
<tr><td>d ≦ 0.2</td><td>(Neglected)</td></tr>
<tr><td>0.2 ＜ d ≦ 0.4</td><td>5</td></tr>
<tr><td>0.4 ＜ d ≦ 0.5</td><td>3</td></tr>
<tr><td>0.5 ＜ d</td><td>0</td></tr>
</table>
</td></tr>
<tr><td colspan="2">Foreign particle (Linear shape)
Scratch</td><td>
<table>
<tr><th>Width (mm)</th><th>Length (mm)</th><th>Acceptable number</th></tr>
<tr><td>W ≦ 0.03</td><td>－</td><td>(Neglected)</td></tr>
<tr><td rowspan="3">0.03 ＜ W ≦ 0.1</td><td>L ≦ 2.0</td><td>(Neglected)</td></tr>
<tr><td>2.0 ＜ L ≦ 4.0</td><td>3</td></tr>
<tr><td>4.0 ＜ L</td><td>0</td></tr>
<tr><td>0.1 ＜ W</td><td>－</td><td>(According to circular shape)</td></tr>
</table>
</td></tr>
</table>

<table>
<tr><th>Inspection item</th><th>Judgement standard</th></tr>
<tr><td>Scratch,
Foreign particle
(Touch screen portion)</td><td>(W = Width, L = Length, D = Diameter = (major axis＋minor axis)/ 2)
<table>
<tr><th>Item</th><th>Width(mm)</th><th>Length(mm)</th><th>Acceptable number</th></tr>
<tr><td rowspan="4">Scratch</td><td>d ≦ 0.03</td><td>L ≦ 20</td><td>Neglected</td></tr>
<tr><td>0.03 ＜ d ≦ 0.05</td><td>L ≦ 10</td><td>2pces within φ20mm</td></tr>
<tr><td>0.05 ＜ d ≦ 0.08</td><td>L ≦ 6</td><td>2pces within φ20mm</td></tr>
<tr><td>0.08 ＜ d ≦ 0.1</td><td>L ≦ 4</td><td>1pces within φ30mm</td></tr>
<tr><td rowspan="2">Foreign (line like)</td><td>W ≦ 0.05</td><td>Neglected</td><td>Neglected</td></tr>
<tr><td>0.05 ＜ W ≦ 0.1</td><td>L ≦ 5</td><td>2pces within φ30mm</td></tr>
<tr><td rowspan="2">Foreign (circle like)</td><td colspan="2">D ≦ 0.2</td><td>Neglected</td></tr>
<tr><td colspan="2">0.2 ＜ D ≦ 0.3</td><td>2pces within φ30mm</td></tr>
</table>
Above are applied to the visible area.
Unless there are foreign particle and damage affected seriously to the electrical performance out of the active area, we approve of this product.</td></tr>
<tr><td>Glass crack
(Touch screen portion)</td><td>
<table>
<tr><th>Item</th><th colspan="3">Size (mm)</th><th>Acceptable number</th></tr>
<tr><td>Conner crack</td><td rowspan="3"> 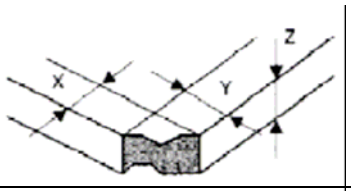
</td><td>X</td><td>≦3</td><td rowspan="3">2 pcs
/panel</td></tr>
<tr><td>Y</td><td>≦3</td></tr>
<tr><td>Z</td><td>＜t</td></tr>
<tr><td>Crack in other area than in corner</td><td rowspan="3"> 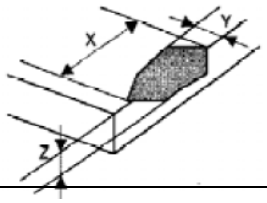
</td><td>X</td><td>≦5</td><td rowspan="3">2 pcs
/side</td></tr>
<tr><td>Y</td><td>≦1.5</td></tr>
<tr><td>Z</td><td>＜t</td></tr>
<tr><td>Progressive crack</td><td colspan="3"> 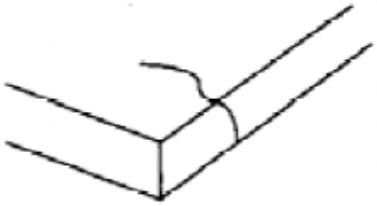 </td><td>0 pcs
(NG even 1pcs)</td></tr>
</table>
Above are applied to the visible area.
Unless there are foreign particle and damage affected seriously to the electrical performance out of the active area, we approve of this product.</td></tr>
<tr><td>Newton’s ring</td><td>Neglected.
 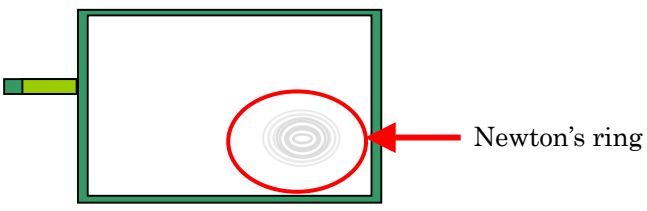
</td></tr>
</table>