RoHS
COMPLIANT

KYOCERA Display Corporation

APPROVAL SHEET
承　　認　　書

Customer 客戶名稱	
Part No. 產品型號	TVL-55739GD032JU-LW-G-AAN
Product type 產品內容	Mode: Trans-missive Type, Positive mode 3.2” TFT LCD module 262K Colors
RoHS 綠色產品	□ Non-compliance ■ Compliance
Remarks 備註欄	

■Preliminary Specification　暫行規格

□Final Specification　正式規格

Signature by Customer:
客戶確認簽章:

KYD Confidential Document/Preliminary

Issued by QA	Checked by QA	Checked by PM	Approved By	
			QA	RD

RoHS
COMPLIANT

KYOCERA Display Corporation

Specification of LCD Module

Product No.: TVL-55739GD032JU-LW-G-AAN

Issue date: 2012/04/02

KYD Confidential Document/Preliminary

KYOCERA DISPLAY CORPORATION

5-7-18, Higashinippori Arakawa-ku ,
Tokyo 116-0014, Japan
TEL: +81-3-5811-8780
FAX: +81-3-5811-8782

TABLE OF CONTENTS

1. GENERAL DESCRIPTION 5

2. FEATURES 5

3. MECHANICAL SPECIFICATION 5

4. MECHANICAL DIMENSION 6

5. MAXIMUM RATINGS 7

6. ELECTRICAL CHARACTERISTICS 7

6.1. TFT LCD Characteristic 7
6.2. Backlight Characteristic 8

7. MODULE FUNCTION DESCRIPTION 9

7.1. PIN Description 9
7.2. Timing characteristics 10
7.3. Initialization Table 16
7.4. Power On Sequence 19
7.5. Power Off Sequence 20

8. ELECTRO-OPTICAL CHARACTERISTICS 21

8.1. CIE(x, y) chromaticity 21

9. RELIABILITY 24

9.1. Tests 24
9.2. Color performance 24

10. INSPECTION CRITERIA 25

10.1. Inspection Conditions 25
10.2. Light Method 25
10.3. Classification Of Defects 26
10.4. Sampling & Acceptable Quality Level 26
10.5. Definition Of Inspection Area 26
10.6. Items and Criteria 27

KYD Confidential Document/Preliminary

11. ROHS COMPLIANT WARRANTY 31

12. PRECAUTIONS FOR USE 31

12.1. Safety 31
12.2. Storage Conditions 31
12.3. Installing LCD Module 31
12.4. Precautions For Operation 32
12.5. Handling Precautions 32
12.6. Guarantee 34

13. REVISION HISTORY 34

KYD Confidential Document/Preliminary

1. GENERAL DESCRIPTION

TVL-55739GD032JU-LW-G-AAN is a Trans-missive type color active matrix liquid crystal display (LCD), which uses amorphous thin film transistor (TFT) as switching devices. This product is composed of a TFT LCD panel, driver IC, FPC backlight and a bezel unit. The following table described the features of TVL-55739GD032JU-LW-G-AAN.

2. FEATURES

Display Mode	Transmissive Type
	TFT LCD, Positive
Display Format	RGB Strip type
Driver IC.	ILI9481B
Color	262K color
Interface	18 bits RGB interface
Viewing Direction	12 O'clock (Gray scale inversion)
Backlight type / color	LED / white *6

3. MECHANICAL SPECIFICATION

Item	Specifications	Unit
Dimensional outline	51.64(W)×80.7(H)×2.2(D)	mm
Resolution	320×3(R,G,B)×480	dot
Active area	44.64(W)×66.96(H)	mm
Pixel pitch	0.1395(W)×0.1395(H)	mm

KYD Confidential Document/Preliminary

4. MECHANICAL DIMENSION

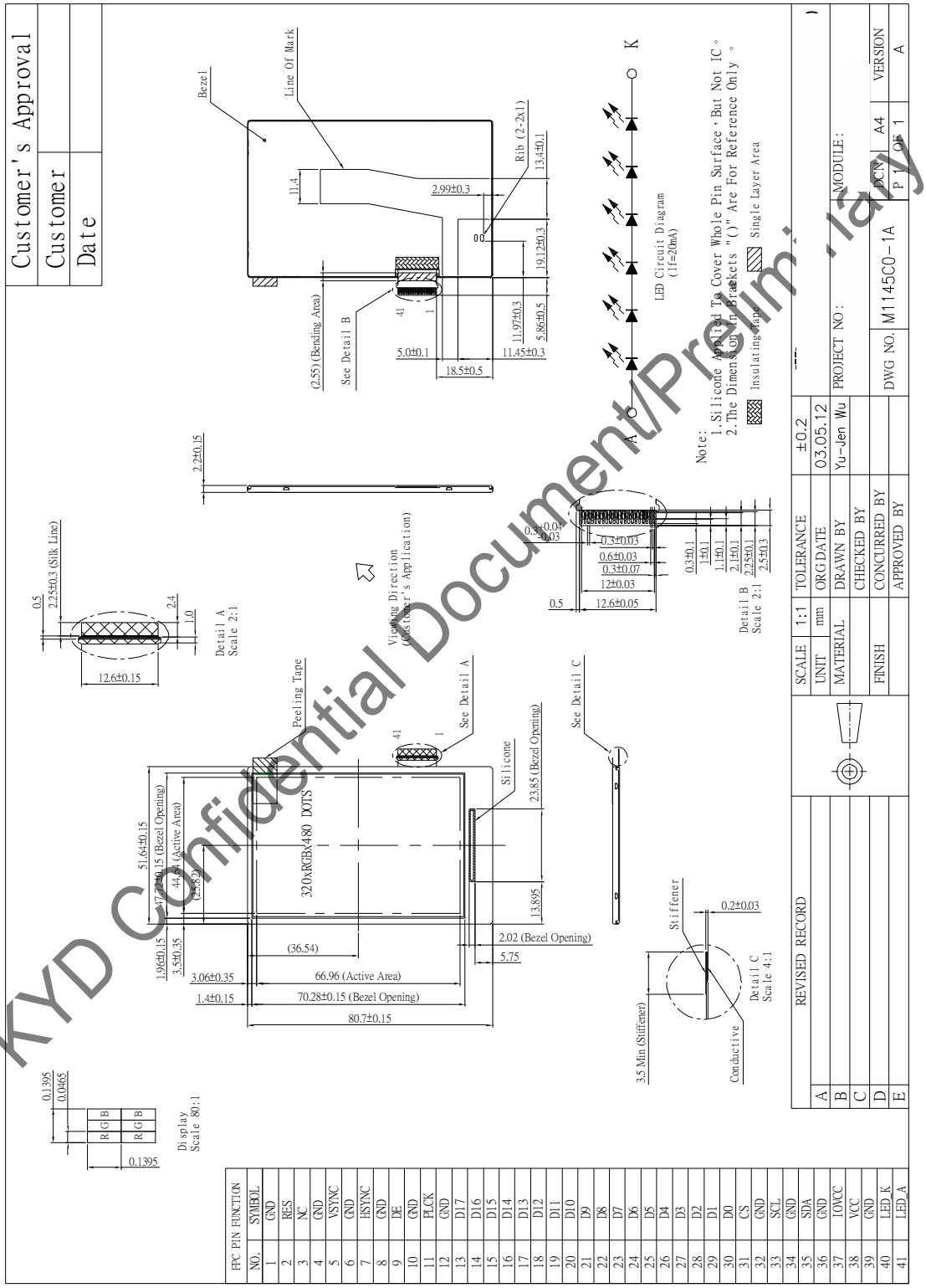

KYD Confidential Document/Preliminary

5. MAXIMUM RATINGS

If the operating condition exceeds the following absolute maximum ratings, the TFT LCD module may be damaged permanently.

Item	Symbol	Values		Unit	Condition
		Min.	Max.		
Power Supply for Analog	VCC	-0.3	4.6	V	
Power Supply for Digital	IOVCC	-0.3	4.6	V	
Storage Temperature	T_{ST}	-30	80	°C	
Operating Temperature (Ambient Temperature)	T_{OP}	-20	70	°C	
Humidity	-	-	90	%RH	Note 1

Note1: $T_A \leqq 40$℃ Without dewing

Note2:

a. All of voltage listed above are with respective to GND=0V.

b. Device is subject to be damaged permanently if stresses beyond those absolute maximum ratings listed above.

6. ELECTRICAL CHARACTERISTICS

6.1. TFT LCD Characteristic

Typical operating conditions (GND=AVSS=0V)

Item		Symbol	Min.	Typ.	Max.	Unit	Note
Analog Power Supply Voltage		VCI	2.5	2.8	3.3	V	
I/O pin Power Supply Voltage		IOVCC	1.65	1.8	3.3	V	
Driver Input signal voltage	H	V_{IH}	0.7*IOVCC	-	IOVCC	V	
	L	V_{IL}	0	-	0.3*IOVCC	V	
Driver output signal voltage	H	V_{OH}	0.8*IOVCC	-	IOVCC	V	
	L	V_{OL}	0	-	0.2*IOVCC	V	
Supply Current for Logic		IDD	-	16	24	mA	
Sleep current		Islp	-	60	100	μA	
Frame Frequency		fFrame	-	60	-	Hz	

KYD Confidential Document/Preliminary

6.2. Backlight Characteristic

6.2.1. CHARACTERISTIC

Item	Symbol	Values			Unit	Remark
		Min.	Typ.	Max.		
LED Current	I_F	-	20	-	mA	
LED Voltage	V_F	17.4	-	21.6	V	

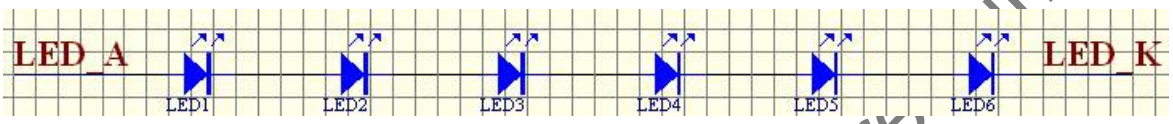

6.2.2. LIGHTGUIDE SPECIFICATION

a. Test Instrument : BM-7 (Distance =500mm ; Field = 1°)

b. Light Source : LED * 6 (White)

c. Conditions : I_f = 20 mA(typ)

d. Measure Brightness : 1 ~ 9

e. Uniformity = (Min。Brightness / Max。Brightness)*100%

f. Uniformity ≧ 75%

KYD Confidential/Preliminary

7. MODULE FUNCTION DESCRIPTION

7.1. PIN Description

Pin	Symbol	Function
1	GND	Ground
2	RES	This signal low will reset the device and must be applied to properly initialize chip. Signal is low active.
3	NC	No Connect
4	GND	Ground
5	VSYNC	Vertical Sync Input
6	GND	Ground
7	HSYNC	Horizontal Sync Input
8	GND	Ground
9	DE	Data enable signal input
10	GND	Ground
11	PCLK	Pixel clock signal in DPI interface mode
12	GND	Ground
13~30	D17~D0	Data Bit 17~Data Bit 0
31	CS	Chip Select Pin
32	GND	Ground
33	SCL	Serial clock input pin.
34	GND	Ground
35	SDA	Serial data input pin.
36	GND	Ground
37	IOVCC	Power supply for digital circuit
38	VCC	Power supply for analog circuit
39	GND	Ground
40	LED_K	Backlight LED Power (-)
41	LED_A	Backlight LED Power (+)

KYD Confidential Document/Preliminary

7.2. Timing characteristics

7.2.1. Serial Interface(Type C)

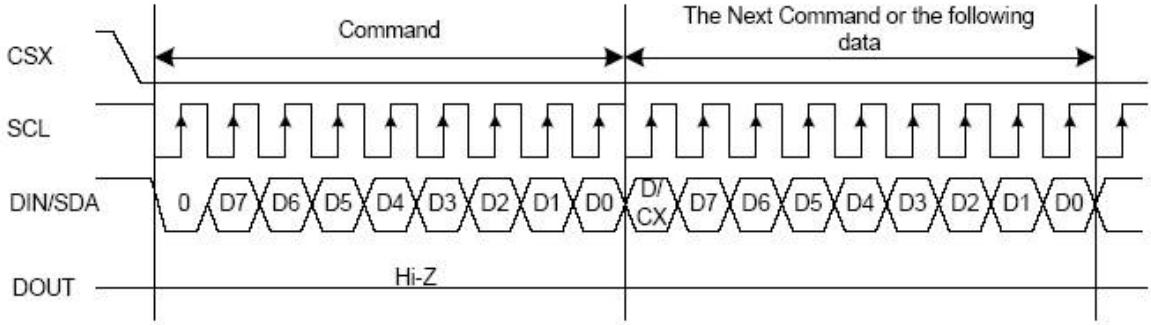

DBI Type C Interface Write Sequence – Option 1

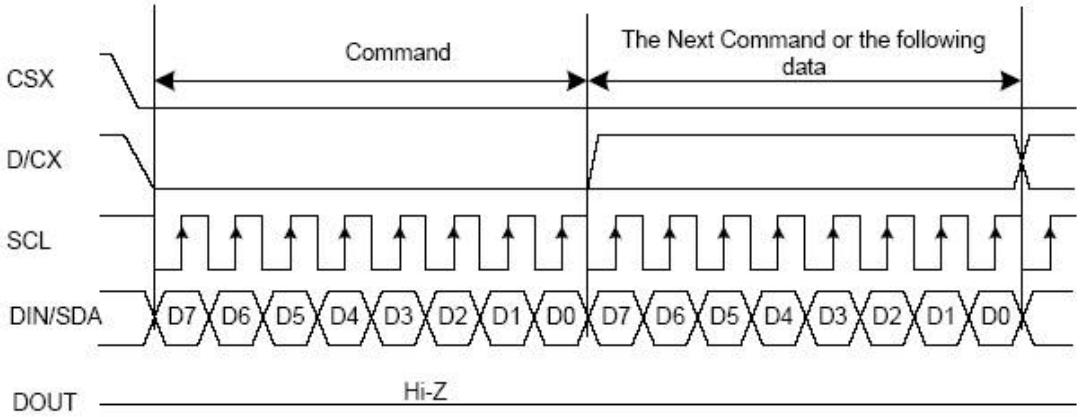

DBI Type C Interface Write Sequence – Option 3

Note:

1. D7 is MSB and D0 is LSB of byte.
2. When the Interface control register (C6h) SDA_EN is set as '1', the DIN/SDA pin is bi-direction and DOUT pin is not used.
3. When the Interface control register (C6h) SDA_EN is set as '0', the DIN/SDA pin is uni-direction and DIN and DOUT pins are used for data write and read.

7.2.2. DBI Type C Timing Characteristics

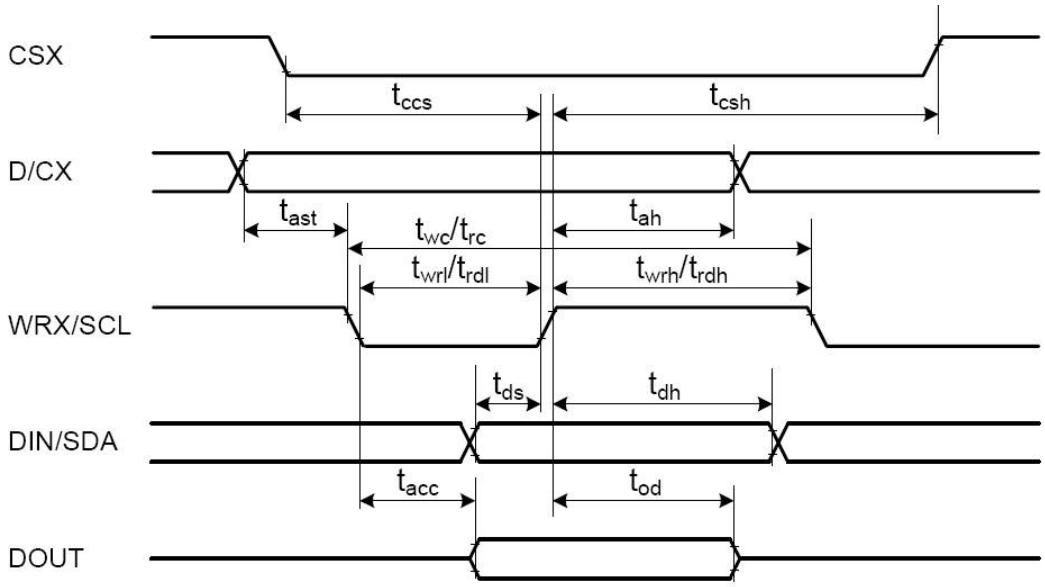

Signal	Symbol	Parameter	Min.	Max.	Unit	Description
CSX	t_{css}	Chip select setup time (Write)	40	-	ns	
	t_{csh}	Chip select hold time (Write)	40	-	ns	
D/CX	t_{as}	Address setup time	10		ns	
	t_{ah}	Address hold time (Write/Read)	10		ns	
WRX/SCL (Write)	t_{wc}	Write cycle	100		ns	
	t_{wrh}	SCL High duration (write)	50		ns	
	t_{wrl}	SCL Low duration (write)	50		ns	
WRX/SCL (Read)	t_{rc}	Read cycle	300		ns	
	t_{rdh}	SCL High duration (read)	120		ns	
	t_{rdl}	SCL Low duration (read)	120		ns	
DIN/SDA (Driver IC)	t_{ds}	Data setup time	30		ns	
	t_{dh}	Data hold time	30		ns	
DOUT (Driver IC)	t_{acc}	Access time	-	110	ns	
	t_{od}	Output disable time	10		ns	

KYD

RoHS
COMPLIANT

7.2.3. Display Pixel Interface (DPI)

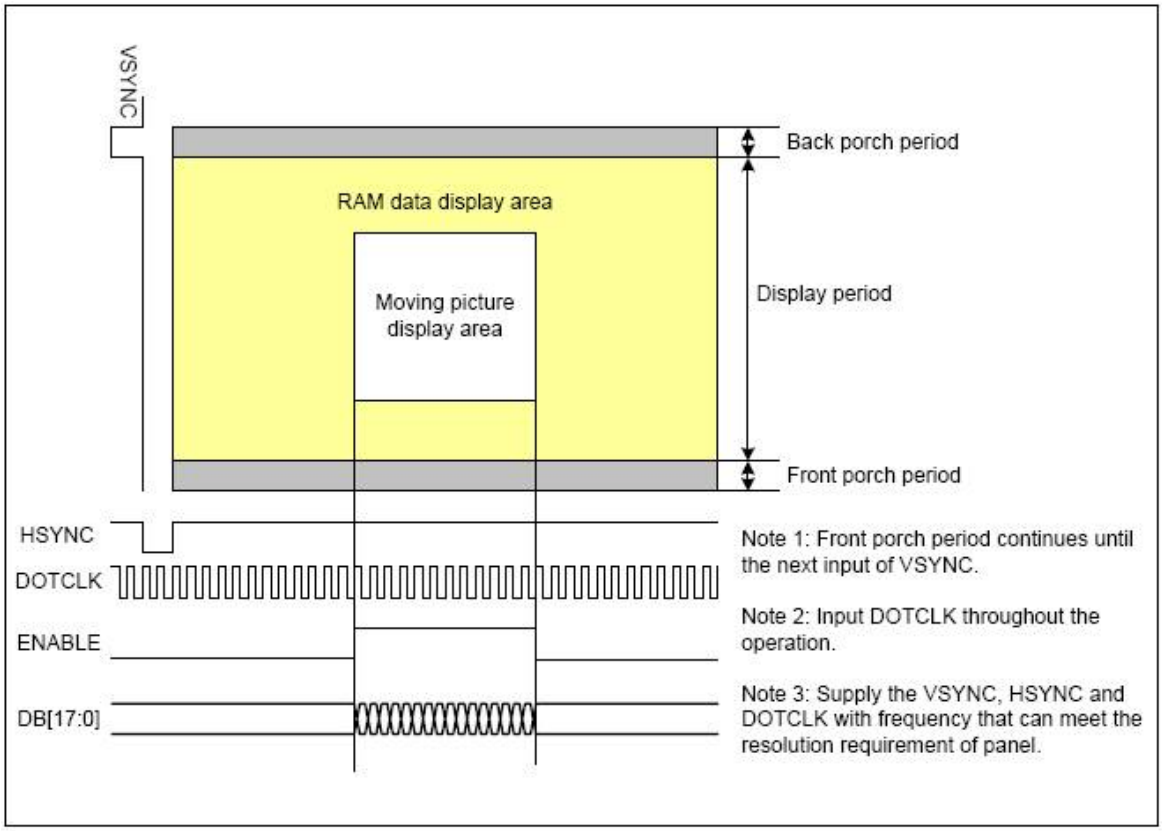

KYD Confidentia

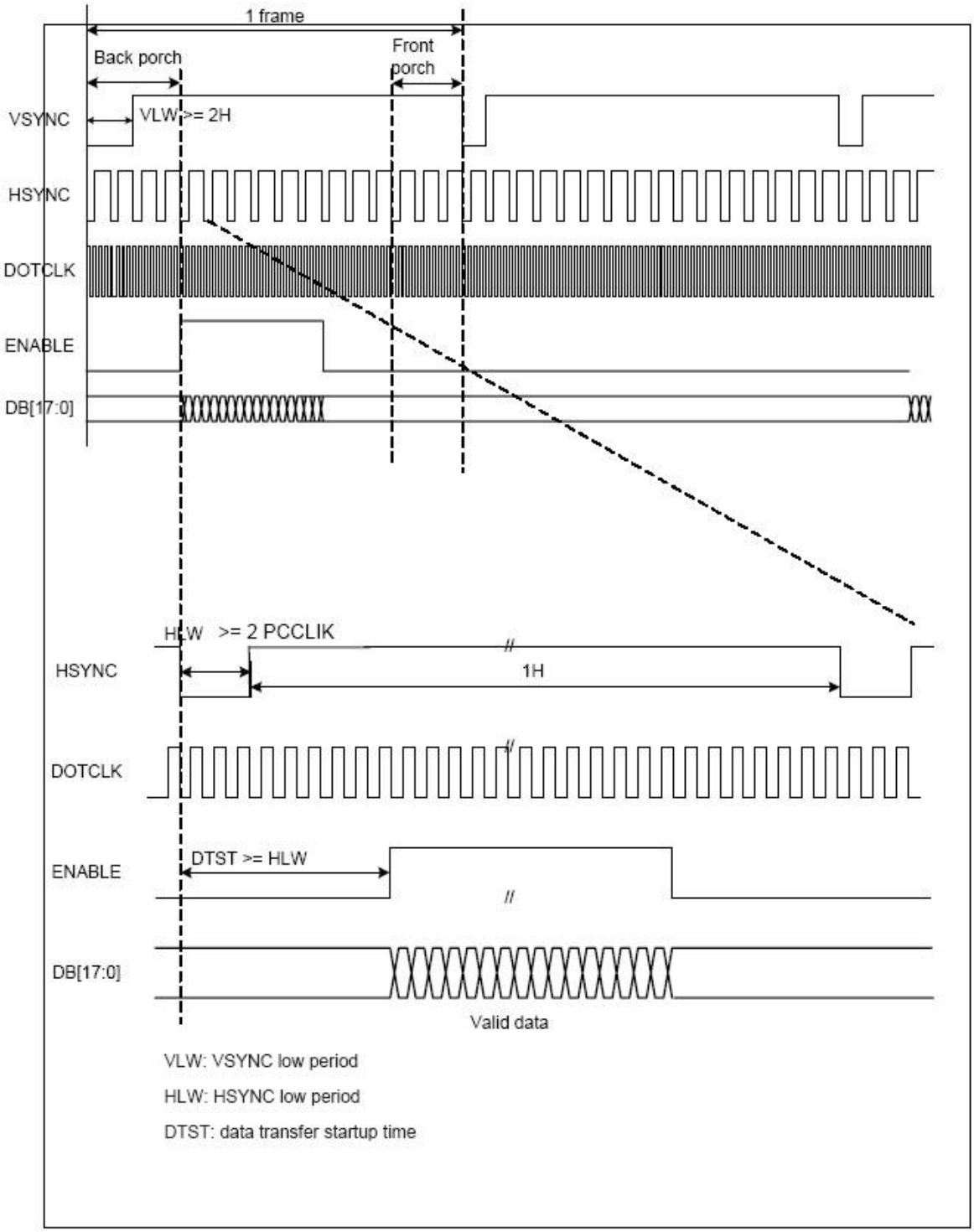
1 frame
Back porch
Front porch
VSYNC
VLW >= 2H
HSYNC
DOTCLK
ENABLE
DB[17:0]
HLW >= 2 PCCLIK
HSYNC
1H
DOTCLK
ENABLE
DTST >= HLW
DB[17:0]
Valid data
VLW: VSYNC low period
HLW: HSYNC low period
DTST: data transfer startup time

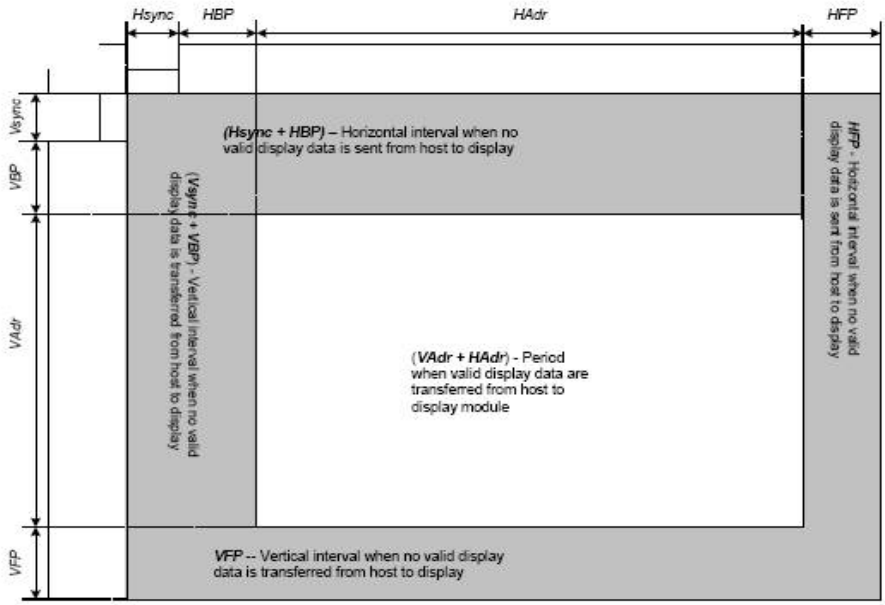

Parameters	Symbols	Condition	Min.	Typ.	Max.	Units
PCLK Cycle	$PCLK_{CYC}$		-	125	104	ns
Horizontal Synchronization	Hsync		2	2	4	PCLK
Horizontal Back Porch	HBP		3	3	20	PCLK
Horizontal Address	HAdr		-	320	-	PCLK
Horizontal Front Porch	HFP		3	3	40	PCLK
Vertical Synchronization	Vsync		2	2	-	Line
Vertical Back Porch	VBP		2	2	30	Line
Vertical Address	VAdr		-	480	-	Line
Vertical Front Porch	VFP		2	4	30	Line
Vsync setup time	VSST					Hz
Vsync hold time	VSHT					Hz
Hsync setup time	HSST					Hz
Hsync hold time	HSHT					Hz
Data setup time	DST					Hz
Data hold time	DHT					Hz
Vertical Frequency(*)				50	60	Hz
Horizontal Frequency(*)			-	-	-	KHz
PCLK Frequency(*)			-	8	9.6	MHz

Notes:

1. Vertical period (one frame) shall be equal to the sum of Vsync + VBP + VAdr + VFP.
2. Horizontal period (one line) shall be equal to the sum of Hsync + HBP + HAdr + HFP.
3. Control signals PCLK and Hsync shall be transmitted as specified at all times while valid pixels are transferred between the host processor and the display module.

18bit DPI Interface Connection: set_pixel_format D[6:4]=3'h6 : 18bpp

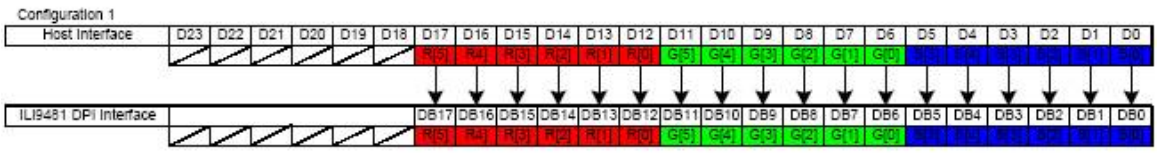

RoHS
COMPLIANT

7.2.4. DPI Interface Timing Characteristics

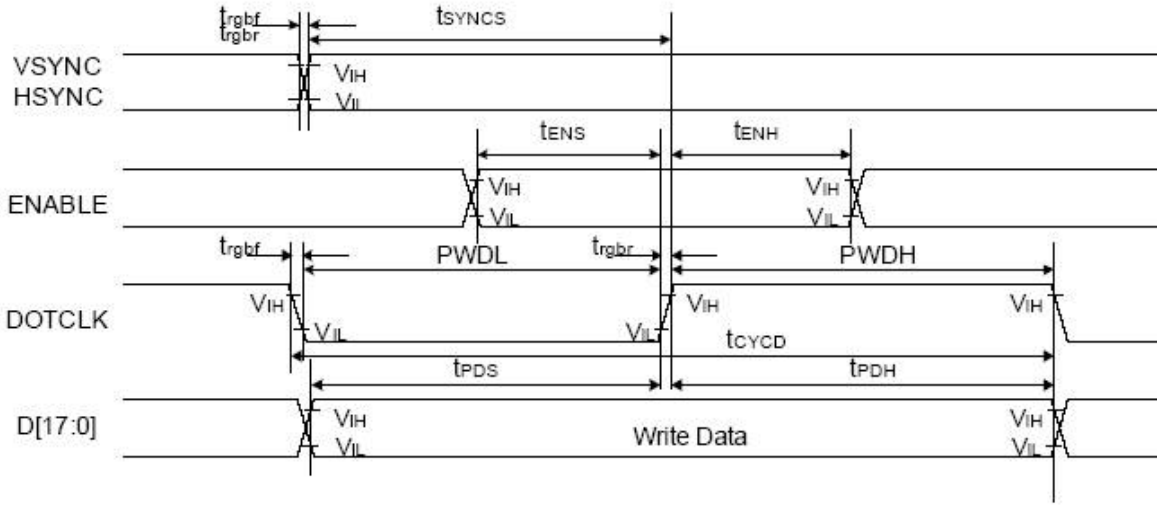

Signal	Symbol	Parameter	min	max	Unit
VSYNC / HSYNC	t_{SYNCS}	VSYNC/HSYNC setup time	15	-	ns
	t_{SYNCH}	VSYNC/HSYNC hold time	15	-	ns
ENABLE	t_{ENS}	ENABLE setup time	15	-	ns
	t_{ENH}	ENABLE hold time	15	-	ns
D[17:0]	t_{PDS}	Data setup time	15	-	ns
	t_{PDH}	Data hold time	15	-	ns
DOTCLK	PWDH	DOTCLK high-level period	52	-	ns
	PWDL	DOTCLK low-level period	52	-	ns
	t_{CYCD}	DOTCLK cycle time	104	-	ns
	t_{rgbr} , t_{rgbf}	DOTCLK,HSYNC,VSYNC rise/fall time	-	15	ns

KYD Con

7.3. Initialization Table

Initial Sequence					
Step	Instruction/Parameters	R/W	D/CX	Reg.	Description
1	Power on	Power Supply			
2	Delay	1ms			
3	Power on reset	Reset Pin = Low			
4	Delay	10ms			
5	Power on reset	Reset Pin = high			
6	Delay	50ms			
7	Soft_reset	W	0	01H	
8	Delay	20ms			
9	Exit_sleep_mode	W	0	11H	Sleep Out
10	Delay	80ms			
11	Set_address_mode	W	0	36H	
		W	1	88H	
12	Set_pixel_format	W	0	3AH	
		W	1	66H	
13	Power_Setting	W	0	D0H	
		W	1	07H	VCI1
		W	1	42H	DDVDH,VCL,VGH,VGL
		W	1	1BH	VREG1OUT
14	VCOM Control	W	0	D1H	
		W	1	00H	
		W	1	24H	VCOMH
		W	1	12H	VCOM AMPLITUDE
15	Power _Setting	W	0	D2H	For Normal Mode
		W	1	02H	
		W	1	00H	
16	Power _Setting	W	0	D3H	For Partial Mode
		W	1	01H	
		W	1	22H	
17	Power _Setting	W	0	D4H	For Idle Mode
		W	1	01H	
		W	1	22H	

KYD Confidential Document/Preliminary

18	Panel Driving Setting	W	0	C0H	
		W	1	10H	
		W	1	3BH	
		W	1	00H	
		W	1	02H	
		W	1	00H	
19	Display_Timing_Setting	W	0	C1H	
		W	1	10H	
		W	1	10H	
		W	1	22H	
20	Frame Rate_Setting	W	0	C5H	
		W	1	04H	
21	Interface Control	W	0	C6H	
		W	1	02H	PCLK Setting
22	Gamma Setting	W	0	C8H	
		W	1	00H	
		W	1	37H	
		W	1	02H	
		W	1	26H	
		W	1	0BH	
		W	1	08H	
		W	1	46H	
		W	1	03H	
		W	1	77H	
		W	1	52H	
		W	1	00H	
		W	1	1EH	
23	NV Memory Write	W	0	E0H	
		W	1	00H	VM_D Setting
24	NV Memory Control	W	0	E1H	
		W	1	00H	VCM_PGM_EN Setting
25	NV Memory Status Read	W	0	E2H	
		W	1	00H	
		W	1	00H	
		W	1	00H	VCM data read value

KYD Confidential Document/Preliminary

26	NV Memory Protection	W	0	E3H	
		W	1	00H	
		W	1	00H	
27	Command Access Protect	W	0	B0H	
		W	1	00H	MCAP Setting
28	Frame Memory Access and Interface Setting	W	0	B3H	
		W	1	02H	Memory write control
		W	1	00H	
		W	1	00H	
		W	1	00H	
29	Display and Frame Memory Write Mode Setting	W	0	B4H	
		W	1	11H	DPI (RGB) interface
30	Power control	W	0	F3H	
		W	1	40H	
		W	1	0FH	
31	Power control	W	0	F6H	
		W	1	80H	
32	Power control	W	0	F7H	
		W	1	80H	
		W	1	01H	
33	Set_display_on	W	0	29H	Display On
34	Set_column_address	W	0	2AH	
		W	1	00H	
		W	1	00H	
		W	1	01H	
		W	1	3FH	
35	Set_column_address	W	0	2BH	
		W	1	00H	
		W	1	00H	
		W	1	01H	
		W	1	DFH	
36	Write_memory_start	W	0	2CH	

KYD Confidential Document/Preliminary

RoHS
COMPLIANT

7.4. Power On Sequence

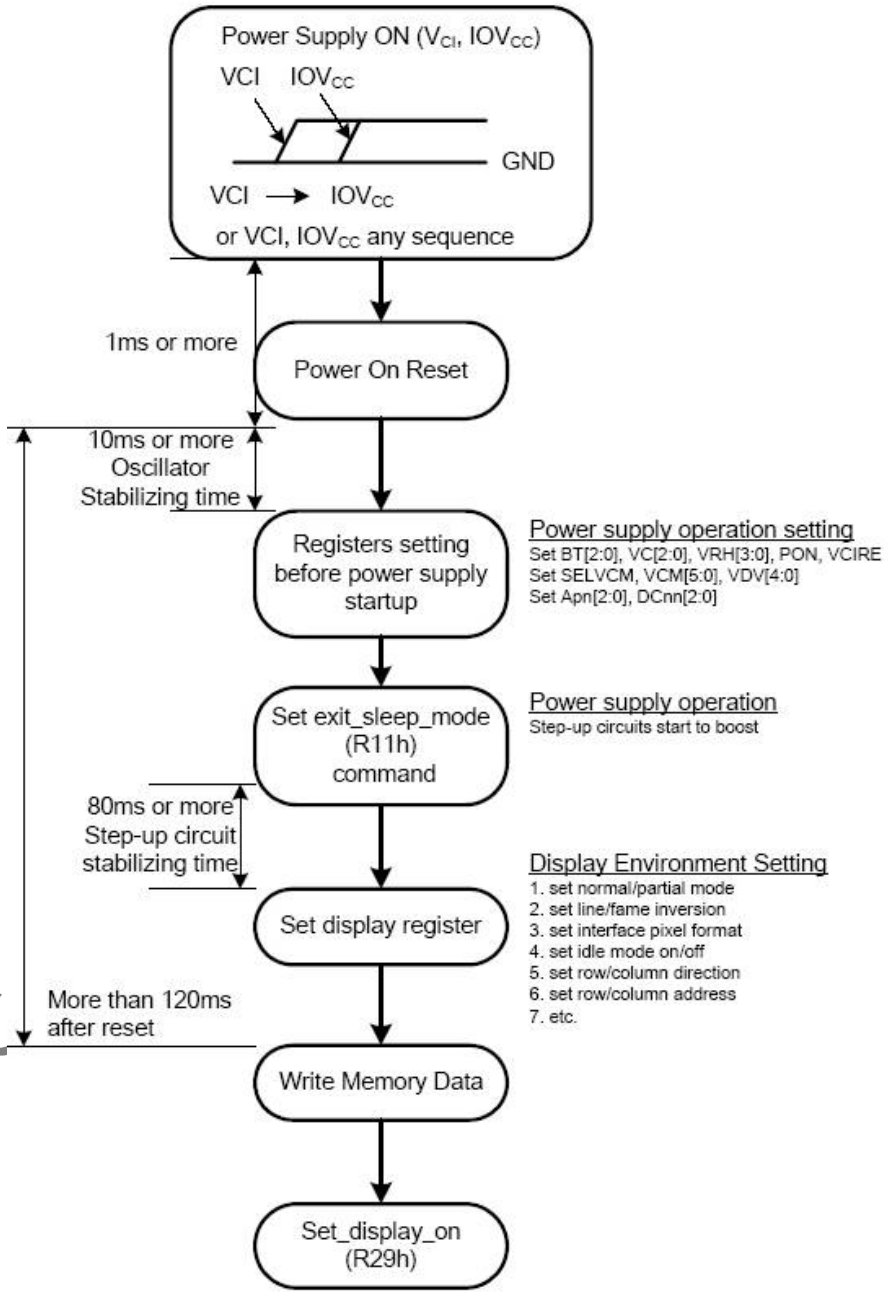

Power ON Sequence

RoHS
COMPLIANT

7.5. Power Off Sequence

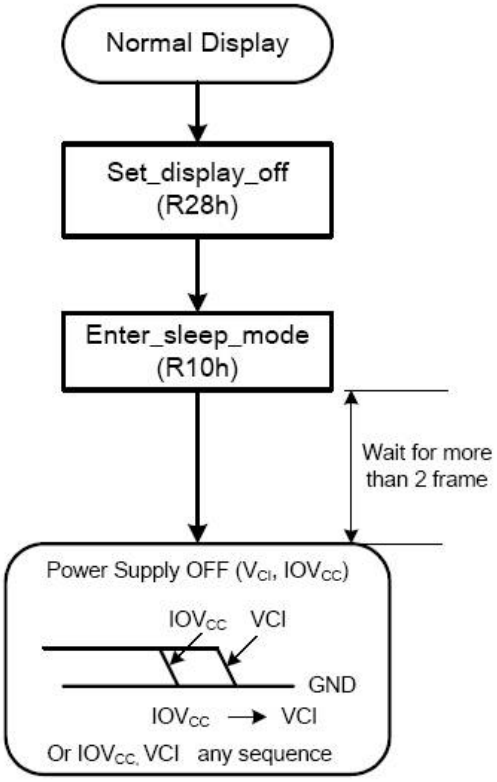

Power OFF Sequence

KYD Confidential Preliminary

8. ELECTRO-OPTICAL CHARACTERISTICS

LED backlight transmissive module: (EWV Polarizer)

Item	Symbol	Temp.	Min.	Typ.	Max.	Unit	Conditions
Response time	Tr	25℃	--	20	30	ms	θ=0°, φ=0° (Note 2)
	Tf	25℃	--	10	15	ms	
Contrast ratio	CR	25℃	300	400	--	--	θ=0°, φ=0° LED:ON,LIGHT:OFF (Note 1)
Uniformity	--	--	75	--	--	%	--
Luminance of White	--	--	380	--	--	Cd/㎡	--
Visual angle range front and rear	θb	25℃	60			Degree	φ=0°,CR≧10 LED:ON, LIGHT:OFF (Note 3)
	θf	25℃	45				
Visual angle range left and right	θl	25℃	60			Degree	φ=90°,CR≧10 LED:ON, LIGHT:OFF (Note 3)
	θr	25℃	60				
Visual angle direction priority	--	--	12 O'clock				Gray scale inversion (Note4)

8.1. CIE(x, y) chromaticity

Item	Symbol	Transmissive			Conditions
		Min.	Typ.	Max.	
Red	X	0.60	0.64	0.68	θ=0°, φ=0° BM-5A 1° angle
	y	0.30	0.34	0.38	
Green	X	0.35	0.39	0.43	
	y	0.52	0.56	0.60	
Blue	X	0.11	0.15	0.19	
	y	0.02	0.06	0.10	
White	X	0.28	0.32	0.36	
	y	0.28	0.32	0.36	
NTSC	%	56			

KYD Confidential Document/Preliminary

RoHS
COMPLIANT

FOR LCM

NOTE 1: Definition of Contrast Ratio (CR).

Contrast ratio is calculated with the following formula.

$$\text{Contrast ratio (CR)} = \frac{\text{Photo detector output when LCD is at “White” state}}{\text{Photo detector output when LCD is at “Black” state}}$$

NOTE 2: Response time definition

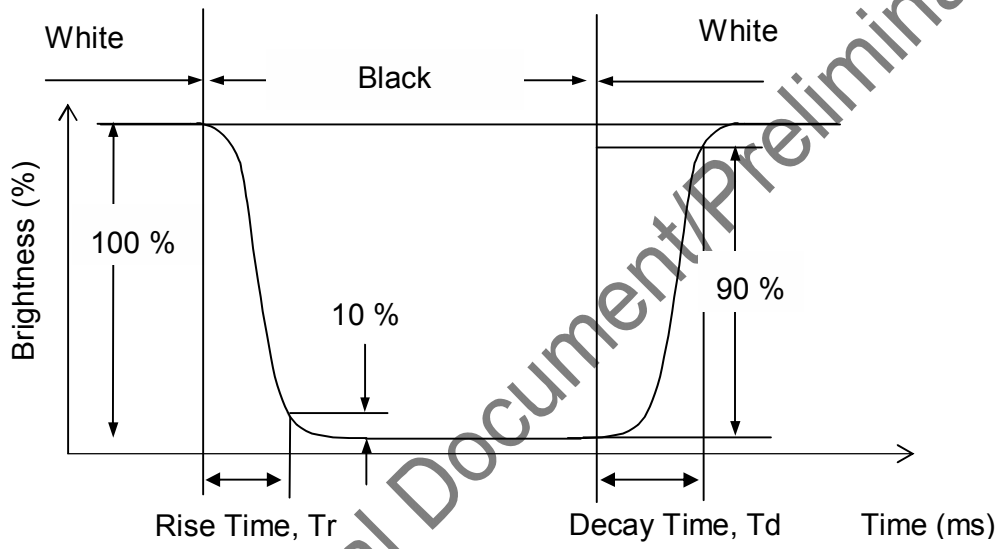

(Positive Type)

NOTE 3 : ϕ 、θ definition

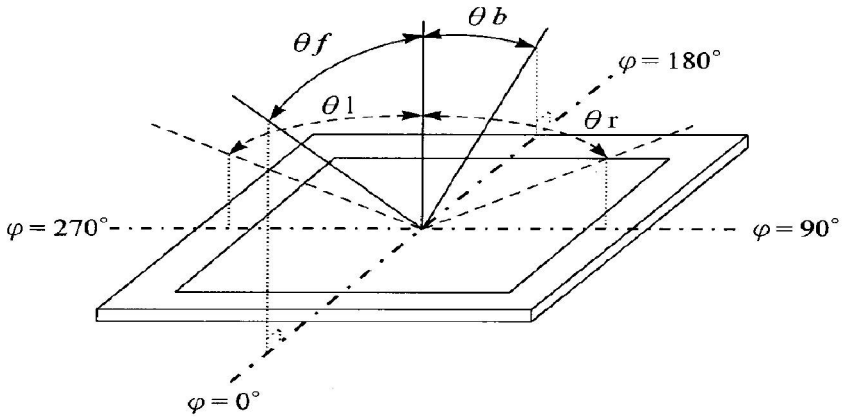

KYC
Confidential Document/Preliminary

NOTE 4: Visual angle direction priority

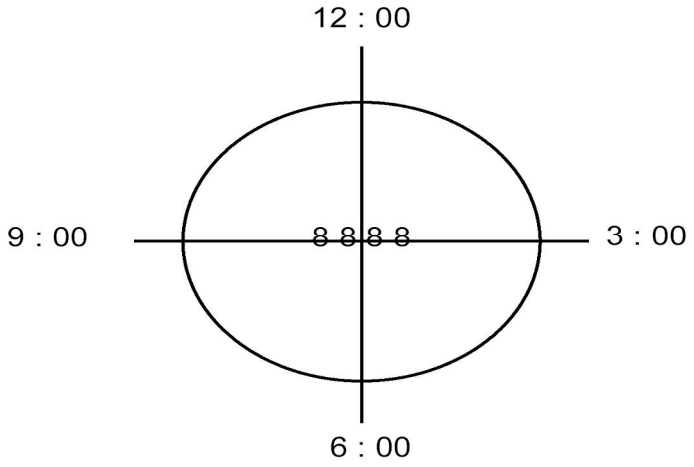

NOTE 5: Optical measurement equipment setup

-Measurement should be executed in a stable, windless, and dark room(under 10 Lunx). After lighting the backlight for 30mins.

Humidity=60±15%

-Distance : 50cm

-Photodetector : BM-5 (Field 1°)

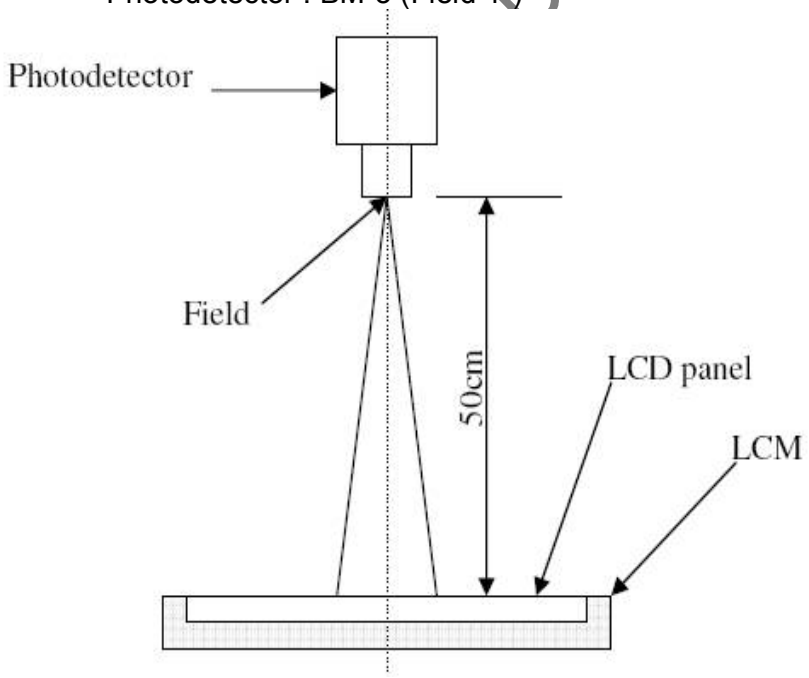

Document/Preliminary

9. RELIABILITY

9.1. Tests

NO.	ITEM	CONDITION	CRITERION
1	High Temperature Operating	70℃ 240 hrs	◦ No Defect Of Operational Function In Room Temperature Are Allowable(23±5°C). ◦ Leakage current should be below double of initial value.
2	Low Temperature Operating	-20℃ 240 hrs	
3	High Temperature Non-Operating	80℃ 240 hrs	
4	Low Temperature Non-Operating	-30℃ 240 hrs	
5	High Temperature/ Humidity Non-Operating	40℃ ,95%RH 240 hrs	
6	Temperature Shock Non-Operating	-30℃ (30min) ←→ 80℃ (30min) 10 CYCLES	
7	Electrostatic Discharge	HBM:±2KV	

Note 1: Test after 24 hours in room temperature(23±5°C).
Note 2: The sampling above is individually for each reliability testing condition.
Note 3: The color fading of polarizing filter should not care.
Note 4: All of the reliability testing chamber above, is using D.I. water.(Min value: 1.0 MΩ -cm)
Note 5: In case of malfunction defect caused by ESD damage, if it would be recovered to normal state after resetting, it would be judged as a good part.

9.2. Color performance

No.	ITEM	Criterion (initial)
1	Luminance	>50%
2	NTSC	>70%
3	Contrast Ratio	>50%

KYD Confidential Document/Preliminary

10. INSPECTION CRITERIA

10.1. Inspection Conditions

10.1.1. Environmental conditions

The environmental conditions for inspection shall be as follows
Room temperature: 23±5°C
Humidity: 50±20%RH

10.1.2. The external visual inspection

With a single 1000±200lux fluorescent lamp as the light source, the inspection was in the distance of 30cm or more from the LCD to the inspector's eyes.

10.2. Light Method

10.2.1. Environment lamp under 1000±200 lux, Viewing direction for inspection over 300mm

10.2.2. The distance from eye to defect around 300mm, the distance from ND Filter to defect around 25~30mm

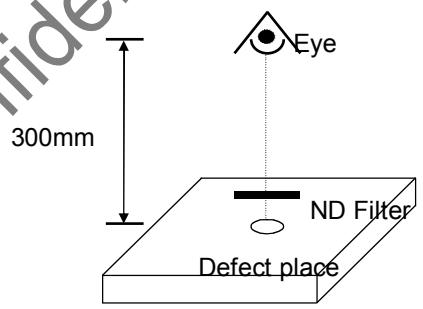

KYD Confidential Document/Preliminary

10.3. Classification Of Defects

10.3.1. Major defect

A major defect refers to a defect that may substantially degrade usability for product applications.

10.3.2. Minor defect

A minor defect refers to a defect which is not considered to be able substantially degrade the product application or a defect that deviates from existing standards almost unrelated to the effective use of the product or its operation.

Notes: If the LCD/LCM 's cosmetic and display performance do not specify in “inspection criterion”, it should be based on these delivered samples.

10.4. Sampling & Acceptable Quality Level

Level II, MIL-STD-105E

	Major	Minor
Cosmetic	1.0 %	1.5 %
Electrical-display	0.4%	0.65 %

10.5. Definition Of Inspection Area

V.A: Viewing Area

A.A: Active Area

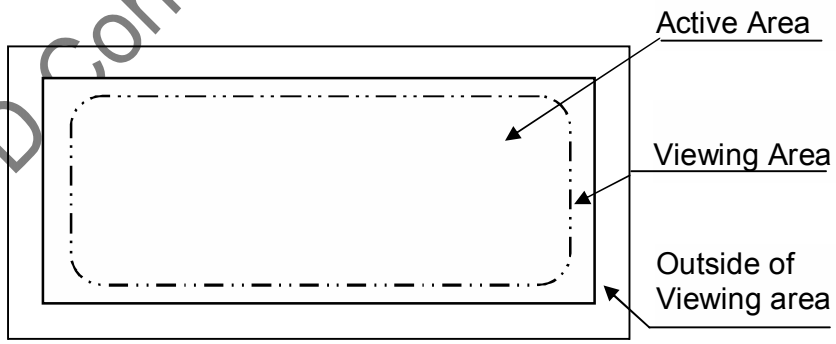

KYD Confidential Document/Preliminary

10.6.Items and Criteria

10.6.1. Visual inspection criterion in cosmetic

(1) Glass defect

No	Defect	Criteria	Remark
1	Dimension (Minor)	By engineering diagram	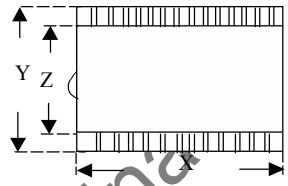
2	Cracks (Major)	Extensive crack 【Reject】	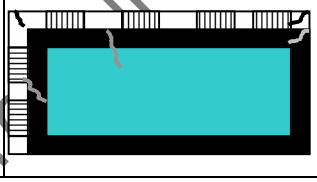

(2) LCM appearance defect <u>within</u> A.A

No	Defect	Criteria		Remark
1	Round type (Minor)	Spec.	Permissible Qty	1. ψ =(L+W)/2, L: Length, W: Width 2. Disregard if out of A.A. 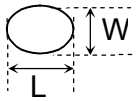
		ψ ≦ 0.10mm	Disregard	
		0.10mm<ψ ≦ 0.20mm	3	
		0.20mm<ψ	0	
2	Line type (Minor)	Spec.	Permissible Qty	1. L: Length, W: Width 2. Disregard if out of A.A. 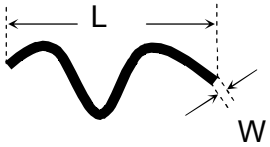
		W≦ 0.03mm	Disregard	
		L≦ 3.0mm and 0.03mm<W≦ 0.05mm	2	
		L≦ 3.0mm and 0.05mm<W≦ 0.10mm	1	
		W>0.10mm or L>3.0mm	0	
3	Polarizer <u>Bubble/</u>dent (Minor)	Spec.	Permissible Qty	1. ψ =(L+W)/2 , L: Length, W: Width 2. Disregard if out of A.A. 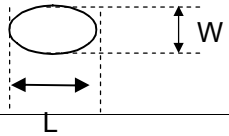
		ψ ≦ 0.20mm	Disregard	
		0.20mm<ψ ≦ 0.30mm	2	
		0.30mm<ψ ≦ 0.50mm	1	

KYD Confidential Document/Proprietary

		0.50mm<ψ	0	

(3) FPC

No	Defect	Criteria	Remark
1	Copper peeling (Minor)	Copper peeling 【Reject】	

(4) Black tape

No	Defect	Criteria	Remark
1	Shift (Minor)	IC exposed 【Reject】	
2	No black tape (Minor)	No black tape 【Reject】	

(5) Silicon

No	Defect	Criteria	Remark
1	Amount of silicon (Minor)	ITO exposed 【Reject】	

(6) Bezel

No	Defect	Criteria	Remark
1	Oxidized spot (Minor)	Oxidized spot, rust 【Reject】	
2	Outline deformation (Minor)	By engineering diagram	
3	Greasiness (Minor)	Greasiness 【Reject】	
4	Spots, round Type (Minor)	H≦ By engineering diagram 【Disregard】	H=Total height (thickness)
5	Plating (Minor)	Bubble, peeling 【Reject】	

(7) Power cord

No	Defect	Criteria	Remark
1	Power cord (Minor)	Power core loose	

KYD Confidential Document/Preliminary

10.6.2. **Visual inspection criterion in electrical display**

LCM electrical criterion

No	Defect	Criteria		Remark
1	No display (Major)	Not allowed		
2	Missing line (Major)	Not allowed		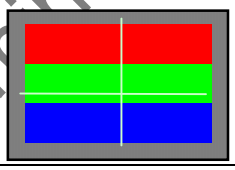
3	Darker or lighter line (Major)	Not allowed		
4	Bright / Dark point (Minor)	Spec.	Permissible Qty	1:1sub-pixel: 1R or 1G or 1B 2:Point defect area≧ 1/2 sub pixel.
		Bright point	1	
		Dark point	2	
5	Round type (Minor)	Spec.	Permissible Qty	1. ψ =(L+W)/2, L: Length, W: Width 2. Disregard if out of A.A. 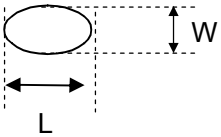
		ψ ≦ 0.10mm	Disregard	
		0.10mm<ψ ≦ 0.20mm	3	
		0.20mm<ψ	0	
6	Line type (Minor)	Spec.	Permissible Qty	1. L: Length, W: Width 2. Disregard if out of A.A. 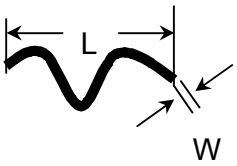
		W≦ 0.03mm	Disregard	
		L≦ 3.0mm and 0.03mm<W≦ 0.05mm	2	
		L≦ 3.0mm and 0.05mm<W≦ 0.10mm	1	
		W>0.10mm or L>3.0mm	0	

KYD Confidential Document/Preliminary

7	Mura (Minor)	By 5% ND filter invisible	

Note1：Issues that are not defined in this document shall be discussed and agreed with both parties. (Customer and supplier)

Note2：Unless otherwise agreed upon in writing, the criteria shall be applied to both parties. (Customer and supplier)

KYD Confidential Document/Preliminary

11. RoHS COMPLIANT WARRANTY

RoHs Hazardous substances including:

- Cd< 100 ppm
- Pb< 1000 ppm
- Hg< 1000 ppm
- Cr +6 < 1000 ppm
- PBDE < 1000 ppm
- PBB < 1000 ppm

12. PRECAUTIONS FOR USE

12.1. Safety

(1) Do not swallow any liquid crystal, even if there is no proof that liquid crystal is poisonous.
(2) If the LCD panel breaks, be careful not to get liquid crystal to touch your skin.
(3) If skin is exposed to liquid crystal, wash the area thoroughly with alcohol or soap.

12.2. Storage Conditions

(1) Store the panel or module in a dark place where the temperature is 23±5°C and the humidity is below 50±20%RH.
(2) Store in anti-static electricity container.
(3) Store in clean environment, free from dust, active gas, and solvent.
(4) Do not place the module near organics solvents or corrosive gases.
(5) Do not crush, shake, or jolt the module.
(6) Do not exposed to direct sun light of fluorescent lamps.

12.3. Installing LCD Module

Attend to the following items when installing the LCM.

(1) Cover the surface with a transparent protective plate or touch panel to protect the polarizer and LC cell.

KYD Confidential Document/Preliminary

12.4. Precautions For Operation

(1) Viewing angle varies with the change of liquid crystal driving voltage (Vo). Adjust Vo to show the best contrast.
(2) Driving the LCD in the voltage above the limit will shorten its lifetime.
(3) Response time is greatly delayed at temperature below the operating temperature range. However, this does not mean the LCD will be out of the order. It will recover when it returns to the specified temperature range.
(4) When turning the power on, input each signal after the positive/negative voltage becomes stable.
(5) Do not apply mater or any liquid on product, which composed of T/P.

12.5. Handling Precautions

(1) Avoid static electricity that can damage the CMOS LSI, please wear the wrist strap when handling.
(2) The polarizing plate of the display is very fragile. So, please handle it very carefully.
(3) Do not give external shock.
(4) Do not apply excessive force on the surface; it may cause display abnormal.
(5) Do not wipe the polarizing plate with a dry cloth, as it may easily scratch the surface of plate.
(6) Do not use ketonics solvent & Aromatic solvent, use with a soft cloth soaked with a cleaning naphtha solvent.
(7) Do not operate it above the absolute maximum rating.
(8) Do not remove the panel or frame from the module.
(9) Do not apply mater or any liquid on product, which composed of T/P.

KYD Confidential Document/Preliminary

12.5.1. Handling precaution for LCM

LCM is easy to be damaged.
Please note below and be careful for handling!

Correct handling:

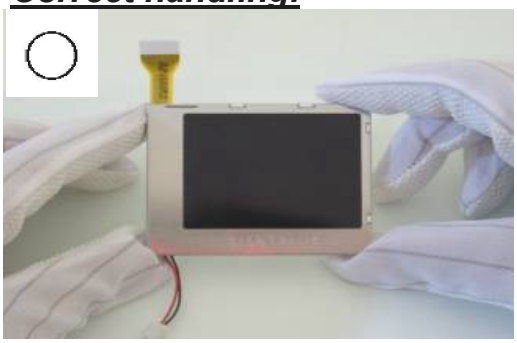

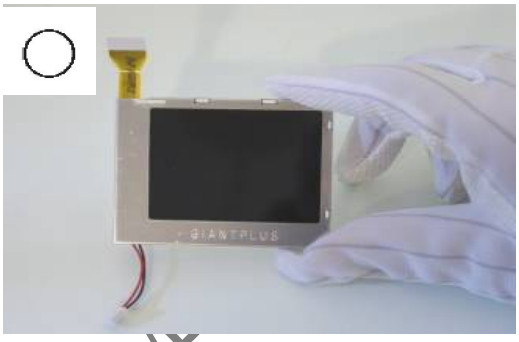

As above picture, please handle with anti-static gloves around LCM edges.

Incorrect handling:

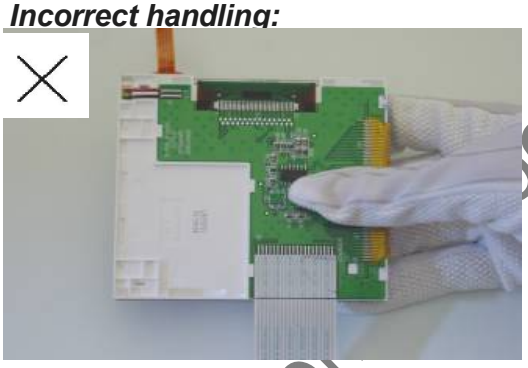

Please don't touch IC directly.

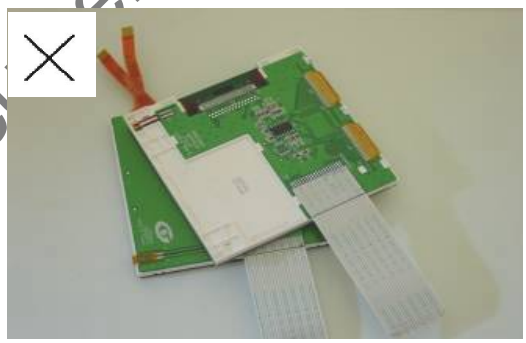

Please don't stack LCM.

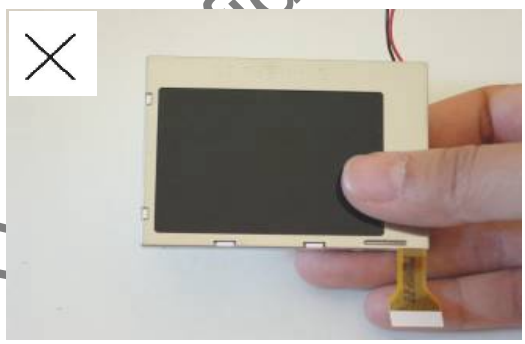

Please don't hold the surface of panel.

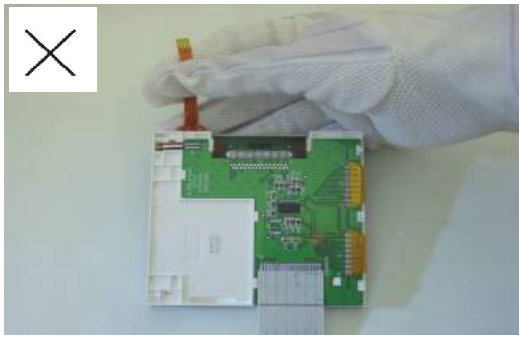

Please don't stretch interface of output, such as FPC cable.

12.6. Guarantee

12.6.1. The period is within 12 months since the date of shipping out under normal using and storage conditions.

12.6.2. Any defect not caused by KYOCERA DISPLAY is not guaranteed to the customer. The defect phenomenon should be agreed by both parties.

13. REVISION HISTORY

Version	Revise record	Date
A	New version	2012/03/07

KYD Confidential Document/Preliminary