SPECIFICATION
FOR
APPROVAL

(●) **Preliminary Specification**
( ) **Final Specification**

Title	43.0” QWUXGA TFT LCD

BUYER	Common
SET MODEL	

SUPPLIER	LG Display Co., Ltd.
*MODEL	LD430EQE
SUFFIX	FPA1(RoHS Verified)

APPROVED BY	SIGNATURE DATE
/	
/	
/	

Please return 1 copy for your confirmation with your signature and comments.

APPROVED BY	SIGNATURE DATE
JaeBum Chun / Team Leader	
REVIEWED BY	
YeonHo Choi / Project Leader	
PREPARED BY	
JongWook Im / Engineer	

TV Product Development Dept.
LG Display Co., Ltd.

CONTENTS

RECORD OF REVISIONS

Revision No.	Revision Date	Page	Description
0.1	April, 17, 2020	-	Preliminary Specification (First Draft)

1. General Description

The LD430EQE is a Color Active Matrix Liquid Crystal Display with an integral Light Emitting Diode (LED) backlight system. The matrix employs a-Si Thin Film Transistor as the active element. It is a transmissive display type which is operating in the normally black mode. It has a 43.51 inch diagonally measured active display area with QWUXGA resolution (2160 vertical by 3840 horizontal pixel array). Each pixel is divided into Red, Green and Blue sub-pixels or dots which are arrayed in vertical stripes. Gray scale or the luminance of the sub-pixel color is determined with a 10-bit gray scale signal for each dot. Therefore, it can present a palette of more than 1.07Bilion colors.
It has been designed to apply the 10-bit (D) 8 Lane V by One interface.
It is intended to support LCD TV, PCTV where high brightness, super wide viewing angle, high color gamut, high color depth and fast response time are important.

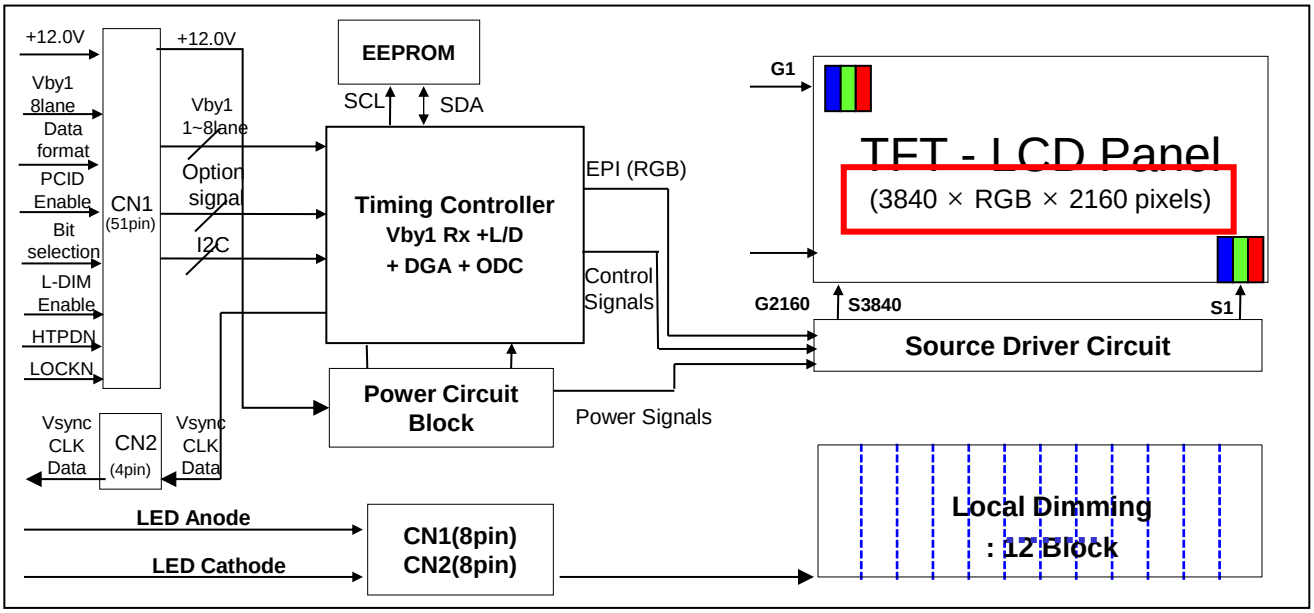

General Features

Active Screen Size	42.51 inches diagonal
Outline Dimension	962.0(H) × 554.8(V) × 9.6 mm(D) (Typ.)
Pixel Pitch	0.2451 mm x 0.2451 mm
Pixel Format	3840 horiz. by 2160 vert. Pixels, RGB stripe arrangement
Display Mode	IPS
Color Depth	10bit(D), 1.07Billon colors
Interface	Vby1 8 Lane
Luminance, White	700cd/m^2 (Center 1point ,Typ.)
BLU Type	Edge type
Viewing Angle (CR>10)	Viewing angle free (R/L 178 (Min.), U/D 178 (Min.))
Power Consumption	Total 77.19(TBD)W (Typ.) - Logic= 5.49W (Typ.,TBD), 7.15W (Max., TBD) - BLU=71.7W (Typ.,TBD) , 76.0W (Max.,TBD) (IF_cathode=75mA [TBD], LED Only)
Weight	8.5 Kg (Typ. ,TBD) , 9.35 Kg (Max. ,TBD)
Display Mode	Transmissive mode, Normally black
Surface Treatment	Hard coating(2H), Anti-glare treatment of the front polarizer (Haze 28% **Typ.)**
Possible Display Type	Landscape and Portrait Enable (counter clock wised)

2. Absolute Maximum Ratings

The following items are maximum values which, if exceeded, may cause faulty operation or permanent damage to the LCD module.

Table 1. ABSOLUTE MAXIMUM RATINGS

Parameter		Symbol	Value		Unit	Note
			Min	Max		
Power Input Voltage	LCD Circuit	V_{LCD}	-0.3	+14.0	V_{DC}	1
LED Input Voltage	Forward Voltage	V_F	-	+94.5V [TBD]	V_{DC}	
T-Con Option Selection Voltage		V_{LOGIC}	-0.3	+4.0	V_{DC}	
Operating Temperature		T_{OP}	0	+50	°C	2,3,4
Storage Temperature		T_{ST}	-20	+60	°C	
Panel Front Temperature (Considering L/C Phase Transition Temperature)		T_{PT}	-	+68	°C	
Operating Ambient Humidity		H_{OP}	10	90	%RH	2,3,4
Storage Humidity		H_{ST}	5	90	%RH	

1. Ambient temperature condition (Ta = 25 ± 2 °C)
2. Temperature and relative humidity range are shown in the figure below.
   Wet bulb temperature should be Max 39°C, and no condensation of water.
3. **Gravity mura can be guaranteed below 50°C condition.**
4. he maximum operating temperatures is based on the test condition that the surface temperature of display area is less than or equal to 68°C with LCD module alone in a temperature controlled chamber. Thermal management should be considered in final product design to prevent the surface temperature of display area from being over 68℃. The range of operating temperature may be degraded in case of improper thermal management in final product design.
5. **Prevent products from being exposed to the direct sunlight. Otherwise, its reliability and function may not be guaranteed**

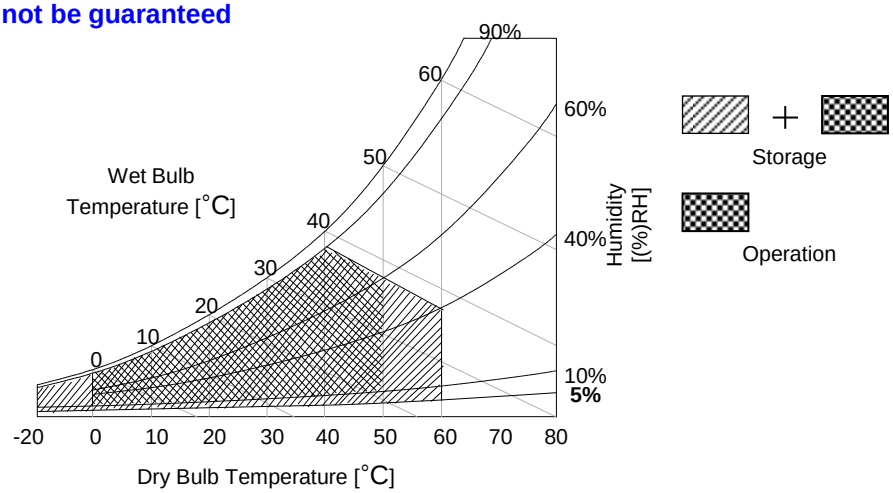

3. Electrical Specifications

3-1. Electrical Characteristics

It requires two power inputs. One is employed to power for the LCD circuit. The other Is used for the LED backlight and LED Driver circuit.

Table 2. ELECTRICAL CHARACTERISTICS

Parameter		Symbol	Value			Unit	notes
			Min	Typ	Max		
Circuit :							
Power Input Voltage		V_{LCD}	10.8	12.0	13.2	VDC	4
Power Input Current		I_{LCD}	-	455(TBD)	595(TBD)	mA	1
			-	TBD	TBD	mA	2
T-CON Option Selection Voltage	Input High Voltage	V_{IH}	2.7	-	3.6	VDC	4
	Input Low Voltage	V_{IL}	0	-	0.7	VDC	4
Power Consumption		P_{LCD}	-	5.49(TBD)	7.15(TBD)	Watt	1
			-	TBD	TBD	Watt	**2**
Rush current		I_{RUSH}	-	-	TBD	A	3

Notes 1. The specified current and power consumption are under the V_{LCD}=12.0V, Ta=25 ± 2°C, f_V=120Hz condition, and mosaic pattern(8 x 6) is displayed and f_V is the frame frequency.

2. The current and power consumption are specified at the maximum current patter.

3. The duration of rush current is about 2ms and rising time of power input is 0.5ms (min.).

4. Ripple voltage level is recommended under ±5% of typical voltage

White : 1023 Gray
Black : 0 Gray

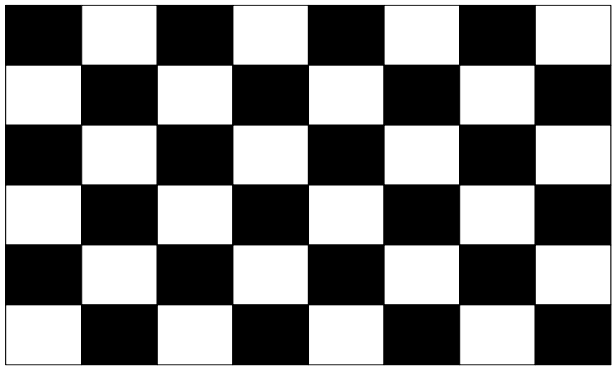

Mosaic Pattern(8 x 6)

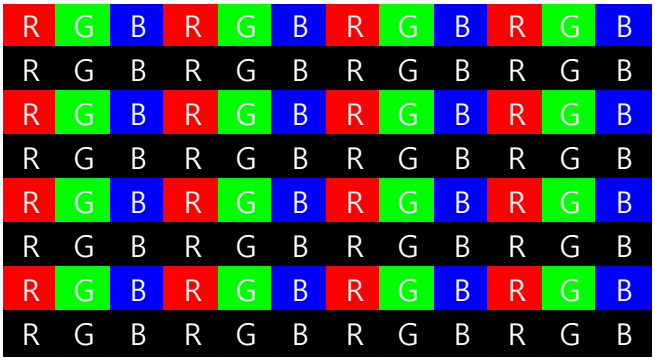

Max Current Pattern

Product Specification

Table 3. ELECTRICAL CHARACTERISTICS (Continue) Ta = 25±2℃, On Duty 100%

Parameter		Symbol	Values			Unit	Note
			Min	Typ	Max		
Backlight Assembly :							
Forward Current (one array)	Anode	$I_{F\ (anode)}$	427.5 [TBD]	450 [TBD]	472.5 [TBD]	mAdc	2, 3
	Cathode	$I_{F\ (cathode)}$	71.3 [TBD]	75 [TBD]	78.8 [TBD]	mAdc	
Forward Voltage		V_F	75.2TBD]	79.7TBD]	84.5[TBD]	Vdc	4
Forward Voltage Variation		$\triangle V_F$			1.7	Vdc	5
Power Consumption		P_{BL}	67.5[TBD]	71.7[TBD]	76.0 [TBD]	W	6
Burst Dimming Duty		On duty	1		100	%	
Burst Dimming Frequency		1/T	95		182	Hz	7
LED Array : (APPENDIX-V)							
Life Time			30,000			Hrs	8

Notes :The design of the LED driver must have specifications for the LED array in LCD Assembly.
The electrical characteristics of LED driver are based on Constant Current driving type.
The performance of the LED in LCM, for example life time or brightness, is extremely influenced by the characteristics of the LED Driver. So, all the parameters of an LED driver should be carefully designed.
When you design or order the LED driver, please make sure unwanted lighting caused by the mismatch of the LED and the driver (no lighting, flicker, etc) has never been occurred. When you confirm it, the LCD–Assembly should be operated in the same condition as installed in your instrument.

1. Electrical characteristics are based on LED Array specification.
2. Specified values are defined for a Backlight Assembly. (IBL :2 LED array/LCM)
   Electrical characteristics are determined after the unit has been 'ON' and stable for approximately 60 minutes at 25±2°C. The specified temperature , optical , and power consumption are under the typical supply Input voltage , current & VBR (Duty : 100%) , it is total power consumption.
3. Each LED array has two anode terminal and six cathode terminals.
   The forward current(I_F) of the anode terminal is 450mA and it supplies 75mA into six strings, respectively

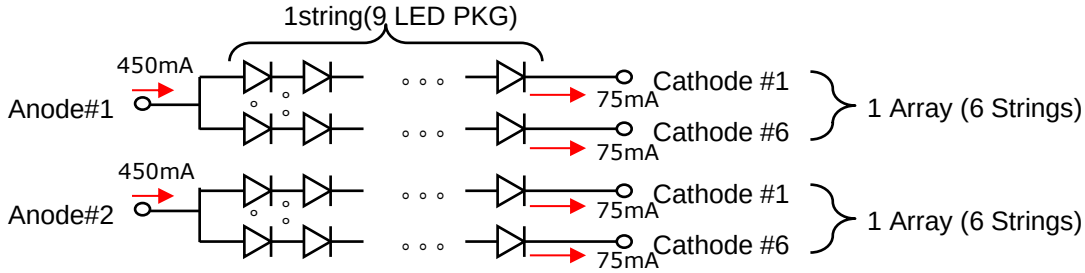

4. The forward voltage(V_F) of LED array depends on ambient temperature (Appendix-V)
5. ΔVF means Max string VF – Min string VF in one Backlight. So V_F variation in a Backlight isn't over Max. 1.7V **based on duty 100%**
6. Maximum level of power consumption is measured at initial turn on.
   Typical level of power consumption is measured after 1hrs aging at 25 ± 2°C.
7. The reference method of burst dimming duty ratio.
   It is recommended to use synchronous V-sync frequency to prevent waterfall
   (Vsync * 1 =Burst Frequency)
   Though PWM frequency is over 182Hz (max252Hz), function of backlight is not affected.
8. The life time is determined as the time at which brightness of the LED is 50% compared to that of initial value at the typical LED current on condition of continuous operating at 25 ± 2°C, based on duty 100%.

3-2. Interface Connections

This LCD module employs two kinds of interface connection, 51-pin connector and 4-pin connector are used for the module electronics and two 8-pin connectors are used for the integral backlight system.

3-2-1. LCD Module

- LCD Connector(CN1): FI-RE51S-HF (manufactured by JAE)
  GT05P-51S-H38 (manufactured by LSM)
  IS050-C51B-C39-C (manufactured by UJU)

Table 4. MODULE CONNECTOR(CN1) PIN CONFIGURATION

No	Symbol	Description	No	Symbol	Description
1	VLCD	Power Supply +12.0V	27	GND	Ground
2	VLCD	Power Supply +12.0V	28	Rx0n	V-by-One HS Data Lane 0
3	VLCD	Power Supply +12.0V	29	Rx0p	V-by-One HS Data Lane 0
4	VLCD	Power Supply +12.0V	30	GND	Ground
5	VLCD	Power Supply +12.0V	31	Rx1n	V-by-One HS Data Lane 1
6	VLCD	Power Supply +12.0V	32	Rx1p	V-by-One HS Data Lane 1
7	VLCD	Power Supply +12.0V	33	GND	Ground
8	VLCD	Power Supply +12.0V	34	Rx2n	V-by-One HS Data Lane 2
9	NC	NO CONNECTION	35	Rx2p	V-by-One HS Data Lane 2
10	GND	Ground	36	GND	Ground
11	GND	Ground	37	Rx3n	V-by-One HS Data Lane 3
12	GND	Ground	38	Rx3p	V-by-One HS Data Lane 3
13	GND	Ground	39	GND	Ground
14	NC	NO CONNECTION	40	Rx4n	V-by-One HS Data Lane 4
15	NC	NO CONNECTION	41	Rx4p	V-by-One HS Data Lane 4
16	Input Mode	Vx1 Input Data Format 'L'=Non-Division , 'H'=2-Division	42	GND	Ground
17	NC	NO CONNECTION	43	Rx5n	V-by-One HS Data Lane 5
18	NC	NO CONNECTION	44	Rx5p	V-by-One HS Data Lane 5
19	NC	NO CONNECTION	45	GND	Ground
20	NC	NO CONNECTION	46	Rx6n	V-by-One HS Data Lane 6
21	Bit SEL	'H' = 10bit(D) , 'L' = 8bit	47	Rx6p	V-by-One HS Data Lane 6
22	LOCAL_ON	H' = Enable , 'L' or NC = Disable	48	GND	Ground
23	RBF	'H' : AGP 'L' : NSB (No signal Black)	49	Rx7n	V-by-One HS Data Lane 7
24	GND	Ground	50	Rx7p	V-by-One HS Data Lane 7
25	HTPDN	Hot plug detect	51	GND	Ground
26	LOCKN	Lock detect	-	-	-

notes
1. All GND (ground) pins should be connected together to the LCD module's metal frame.
2. All Input levels of V-by-One signals are based on the V-by-One HS Standard Version **1.4.**
3. #9, #14, #15 & #17 ~ #20 NC (No Connection) : These pins are used only for LGD (Do not connect)
4. Specific pin No. #23 is used for "No signal detection" of system signal interface.
   It should be GND for NSB (No Signal Black) while the system interface signal is not.
   If this pin is "H", LCD Module displays AGP (Auto Generation Pattern).

3-2-2. Backlight Module

[CN201]

1) LED Array assy Connector (Plug)

: HS100-L08N-N62 (black color, manufactured by UJU)

[CN202]

1) LED Array assy Connector (Plug)

: HS100-L08N-N62-A (natural color, manufactured by UJU)

Pin No	R_CNT (8pin)	L_CNT (8pin)
Pic.	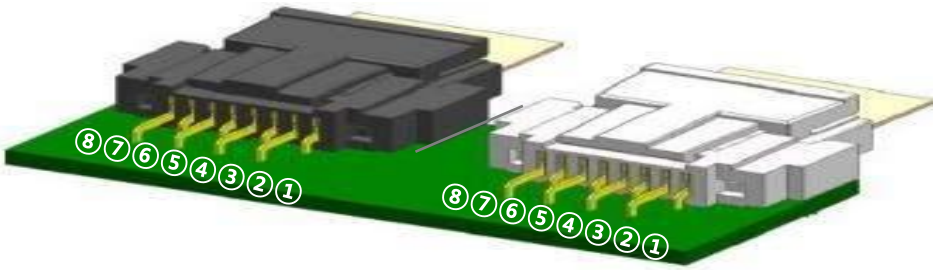	
색상	Black	White
1	R1 Cathode	Anode_L
2	R2 Cathode	NC
3	R3 Cathode	L6 Cathode
4	R4 Cathode	L5 Cathode
5	R5 Cathode	L4 Cathode
6	R6 Cathode	L3 Cathode
7	NC	L2 Cathode
8	Anode_R	L1 Cathode

◆ **Rear view of LCM**

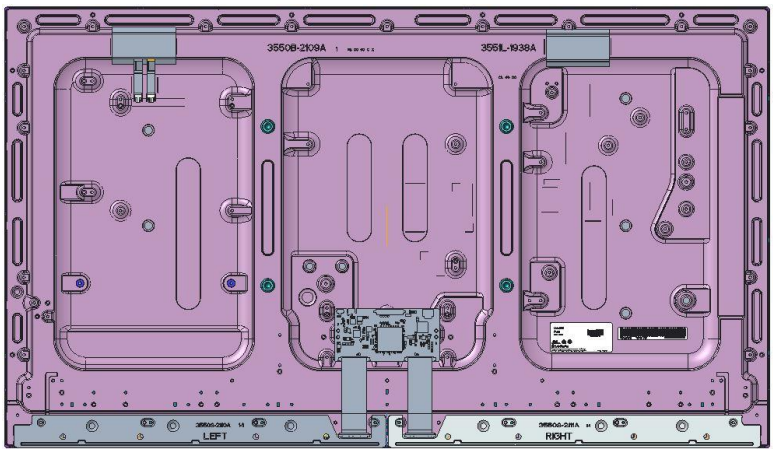

3-2-3. Local Dimming Interface

- Local Dimming Interface Connector : FN100-Z04B-C20(UJU) or Compatible

Table 5-1. LOCAL DIMMING INTERFACE CONNECTOR PIN CONFIGULATION

Pin No	Symbol	Description	Note
1	VSYNC	Vertical Sync signal	
2	GND	Backlight Ground	1
3	SIN	Local Dimming Serial Data (SPI)	
4	SCLK	Local Dim Serial Clock (SPI)	

Notes :1. GND should be connected to the LCD module's metal frame.

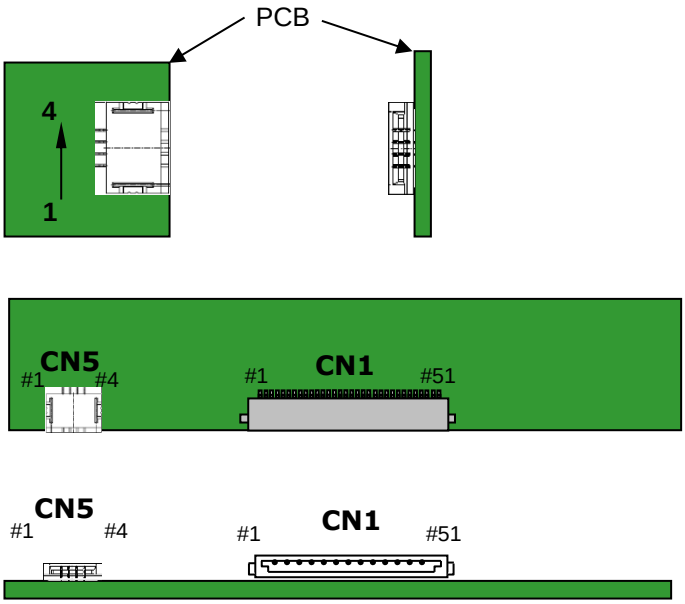

3-3. Signal Timing Specifications

Table 6 shows the signal timing required at the input of the Vx1 transmitter. All of the interface signal timings should be satisfied with the following specification for normal operation.

Table 6. TIMING TABLE (DE Only Mode)

ITEM		Symbol	Min	Typ	Max	Unit	Note
Horizontal	Display Period	t_{HV}	480	480	480	t_{CLK}	3840/8
	Blank	t_{HB}	60	70	120	t_{CLK}	1
	Total	t_{HP}	540	550	600	t_{CLK}	
Vertical	Display Period	t_{VV}	2160	2160	2160	Lines	
	Blank	t_{VB}	40	90	600	Lines	1
	Total	t_{VP}	2200	2250	2760	Lines	

ITEM		Symbol	Min	Typ	Max	Unit	Note
Frequency	DCLK	f_{CLK}	67.00	74.25	78.00	MHz	594/8
	Horizontal	f_H	121.8	135	140	KHz	2
	Vertical	f_V	47	60	63	Hz	2

notes: 1. The input of HSYNC & VSYNC signal does not have an effect on normal operation (DE Only Mode). If you use spread spectrum of EMI, add some additional clock to minimum value for clock margin.

2. The performance of the electro-optical characteristics may be influenced by variance of the vertical refresh rate and the horizontal frequency

3. Spread Spectrum Rate (SSR) is limited to ±0.5% center spread at 30KHz

※ Timing should be set based on clock frequency.

3-4. V by One input signal Characteristics

3-4-1. V by One Input Signal Timing Diagram

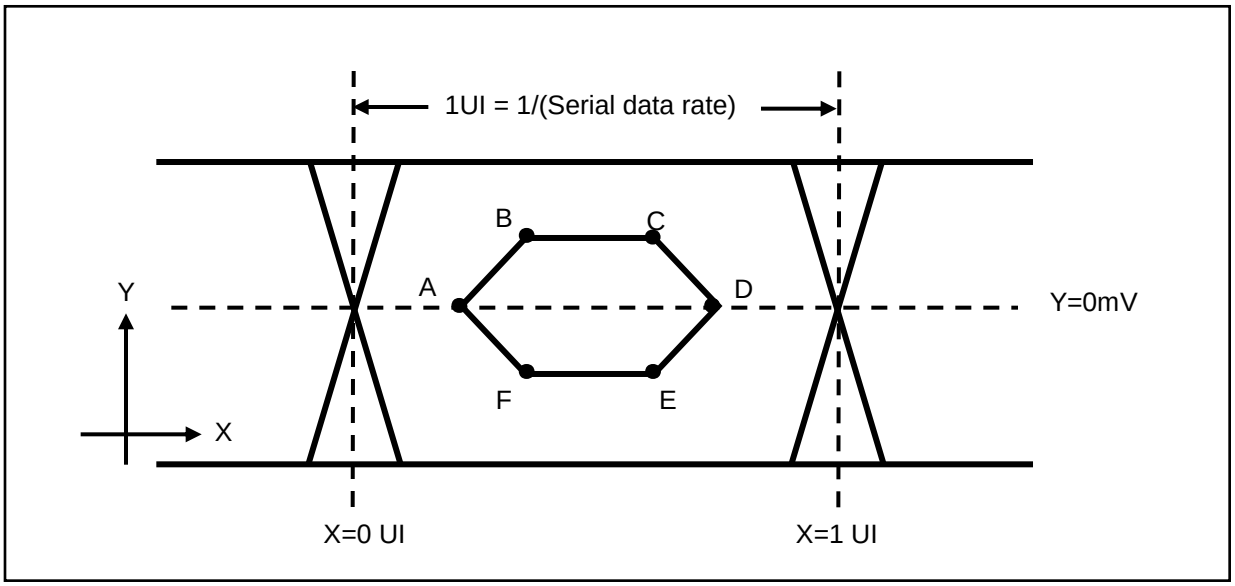

Table7. Eye Mask Specification

	X[UI]	Note	Y[mV]	Note
A	0.25 (max)	2	0	-
B	0.3 (max)	2	50	3
C	0.7(min)	3	50	3
D	0.75(min)	3	0	-
E	0.7(min)	3	I -50 I	3
F	0.3(max)	2	I -50 I	3

notes 1. All Input levels of V by One signals are based on the V by One HS Standard Ver. 1.4
2. This is allowable maximum value.
3. This is allowable minimum value.
4. The eye diagram is measured by the oscilloscope and receiver CDR characteristic must be emulated.
- PLL bandwidth : 15 Mhz
- Damping Factor : 1

3-4-2. V by One Input Signal Characteristics

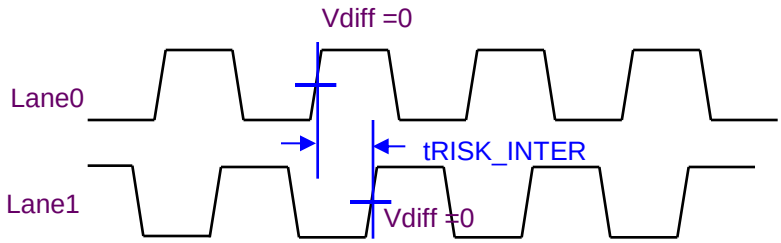

<Inter-pair Skew between two Lanes>

Description	Symbol	Min	Max	Unit	notes
Allowable inter-pair skew between lanes	tRISK_INTER	-	5	UI	1,2

Notes 1.1UI = 1/serial data rate

2. it is the time difference of the differential voltage between any two lanes in one sub block.

3-5. Color Data Reference

The brightness of each primary color (red, green, blue) is based on the 10bit or 8bit gray scale data input for the color.
The higher binary input, the brighter the color. Table 8 provides a reference for color versus data input.

Table 8. COLOR DATA REFERENCE

Packer input & Unpacker output		30bpp RGB (10bit)	24bpp RGB (8bit)
Byte0	D[0]	R[2]	R[0]
	D[1]	R[3]	R[1]
	D[2]	R[4]	R[2]
	D[3]	R[5]	R[3]
	D[4]	R[6]	R[4]
	D[5]	R[7]	R[5]
	D[6]	R[8]	R[6]
	D[7]	R[9]	R[7]
Byte1	D[8]	G[2]	G[0]
	D[9]	G[3]	G[1]
	D[10]	G[4]	G[2]
	D[11]	G[5]	G[3]
	D[12]	G[6]	G[4]
	D[13]	G[7]	G[5]
	D[14]	G[8]	G[6]
	D[15]	G[9]	G[7]
Byte2	D[16]	B[2]	B[0]
	D[17]	B[3]	B[1]
	D[18]	B[4]	B[2]
	D[19]	B[5]	B[3]
	D[20]	B[6]	B[4]
	D[21]	B[7]	B[5]
	D[22]	B[8]	B[6]
	D[23]	B[9]	B[7]
Byte3	D[24]	Don't care	
	D[25]	Don't care	
	D[26]	B[0]	
	D[27]	B[1]	
	D[28]	G[0]	
	D[29]	G[1]	
	D[30]	R[0]	
	D[31]	R[1]	

3-6. Power Sequence

3-6-1. LCD Driving circuit

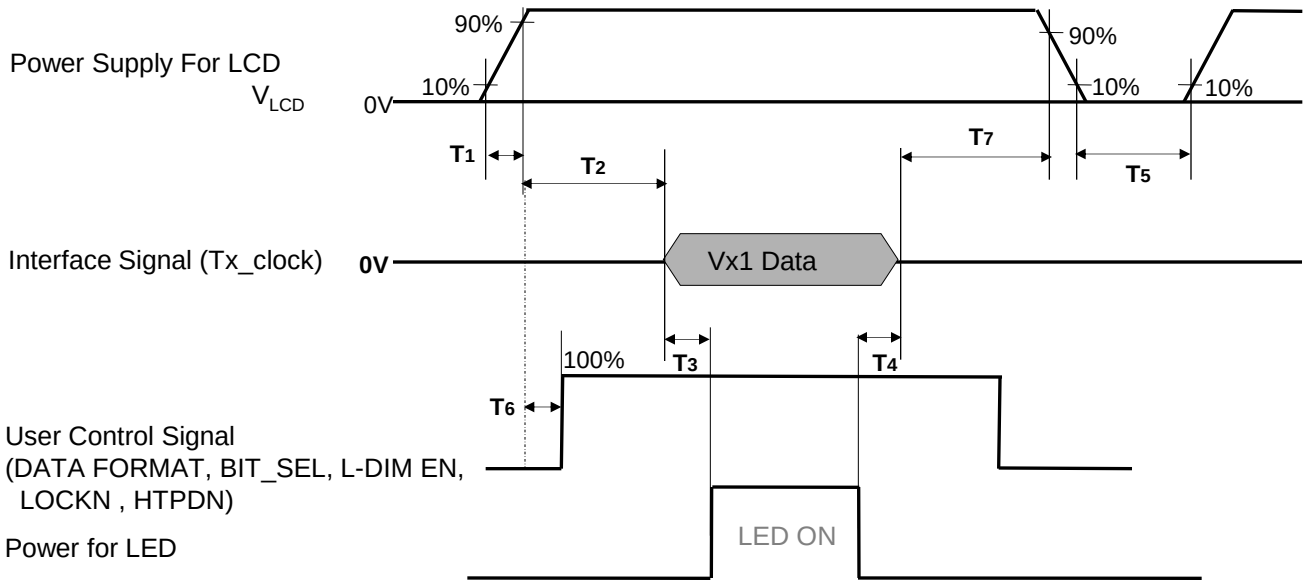

Table 9. POWER SEQUENCE

Parameter	Value			Unit	Notes
	Min	Typ	Max		
T1	0.5	-	20	ms	1
T2	0	-	-	ms	2
T3	400	-	-	ms	3
T4	100	-	-	ms	3
T5	1.0	-	-	s	4
T6	0	-	T2	ms	5
T7	0	-	-	ms	6

Note :
1. Even though T1 is over the specified value, there is no problem if I2T spec of fuse is satisfied.
2. If T2 is satisfied with specification after removing V by One Cable, there is no problem.
3. The T3 / T4 is recommended value, the case when failed to meet a minimum specification, abnormal display would be shown. There is no reliability problem.
4. T5 should be measured after the Module has been fully discharged between power off and on period.
5. If the on time of signals (Interface signal and user control signals) precedes the on time of Power (V_{LCD}), it will be happened abnormal display. When T6 is NC status, T6 doesn't need to be measured.
6. It is recommendation specification that T7 has to be 0ms as a minimum value.

※ Please avoid floating state of interface signal at invalid period.

※ When the power supply for LCD (VLCD) is off, be sure to pull down the valid and invalid data to 0V.

4. Optical Specification

Optical characteristics are determined after the unit has been 'ON' and stable in a dark environment at 25±2°C. The values are specified at distance 50cm from the LCD surface at a viewing angle of Φ and θ equal to 0 °. FIG. 1 shows additional information concerning the measurement equipment and method.

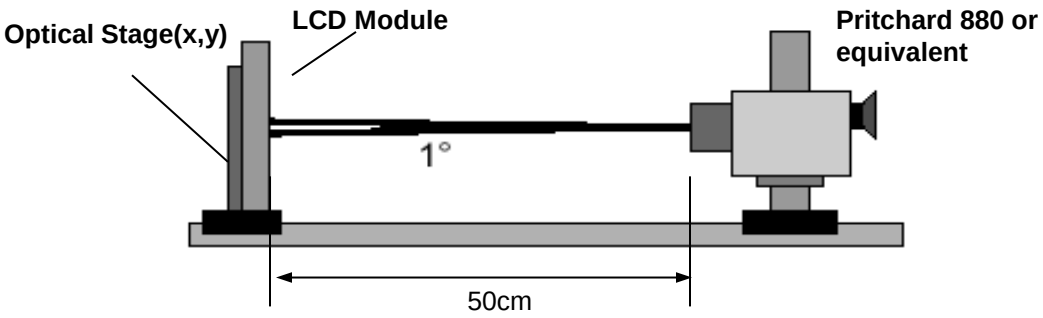

FIG. 1 Optical Characteristic Measurement Equipment and Method

Table 10. OPTICAL CHARACTERISTICS Ta= 25±2°C, V_{LCD}=12.0V, fv=60Hz, Dclk=74.25MHz, **EXTV**BR-B =100%

Parameter			Symbol		Value Min	Value Typ	Value Max	Unit	Note
Contrast Ratio			CR		700(TBD)	1000(TBD)	-		1
Surface Luminance, white			L_{WH}	2D	560	700	-	cd/m²	2
Luminance Variation			δ_{WHITE}	9P	65				3
Response Time	Gray to Gray		G to G			8	12	ms	4
	Uniformity		$\delta_{G\ To\ G}$		-	-	1		
Color Coordinates [CIE1931]	RED		Rx		Typ -0.03	0.643TBD)	Typ +0.03		
			Ry			0.332TBD)			
	GREEN		Gx			0.307TBD)			
			Gy			0.602(TBD)			
	BLUE		Bx			0.153(TBD)			
			By			0.056(TBD)			
	WHITE		Wx			0.279			
			Wy			0.292			
Color Temperature						10,000		K	
Color Gamut						86		%	DCI
Viewing Angle	2D (CR>10)	right(ϕ=0°)	θr (x axis)		89	-	-	degree	5
		left (ϕ=180°)	θl (x axis)		89	-	-		
		up (ϕ=90°)	θu (y axis)		89	-	-		
		down (ϕ=270°)	θd (y axis)		89	-	-		
Gray Scale					-	-	-		6

notes : 1. Contrast Ratio(CR) is defined mathematically as :

$$\text{Contrast Ratio} = \frac{\text{Surface Luminance with all white pixels}}{\text{Surface Luminance with all black pixels}}$$

It is measured at center 1-point.

2. Optical Characteristics is determined after the unit has been 'ON' and 1 Hour after lighting the backlight in a dark environment at 25±2°C. Surface luminance is the luminance value at center 1-point across the LCD surface 50cm from the surface with all pixels displaying white.

3. The variation in surface luminance , δ WHITE is defined as :
δ WHITE(5P) = Maximum(L_{on1},L_{on2}, L_{on3}, L_{on4}, L_{on5}) / Minimum(L_{on1},L_{on2}, L_{on3}, L_{on4}, L_{on5})
Where L_{on1} to L_{on5} are the luminance with all pixels displaying white at 5 locations .
For more information, see the FIG. 2.

4. Response time is the time required for the display to transit from G(N) to G(M) (Rise Time, Tr_R) and from G(M) to G(N) (Decay Time, Tr_D). For additional information see the FIG. 3. (N<M)
※ G to G Spec stands for average value of all measured points.
Photo Detector : RD-80S / Field : 2˚

5. Viewing angle is the angle at which the contrast ratio is greater than 10. The angles are determined for the horizontal or x axis and the vertical or y axis with respect to the z axis which is normal to the LCD module surface. For more information, see the FIG. 4.

6. Gray scale specification
Gamma Value is approximately 2.2. For more information, see the Table 11.

Table 11. GRAY SCALE SPECIFICATION

Gray Level	Luminance [%] (Typ)
L0	0.09 (TBD)
L63	0.27
L127	1.04
L191	2.49
L255	4.68
L319	7.66
L383	11.5
L447	16.1
L511	21.6
L575	28.1
L639	35.4
L703	43.7
L767	53.0
L831	63.2
L895	74.5
L959	86.7
L1023	100

Measuring point for surface luminance & measuring point for luminance variation.

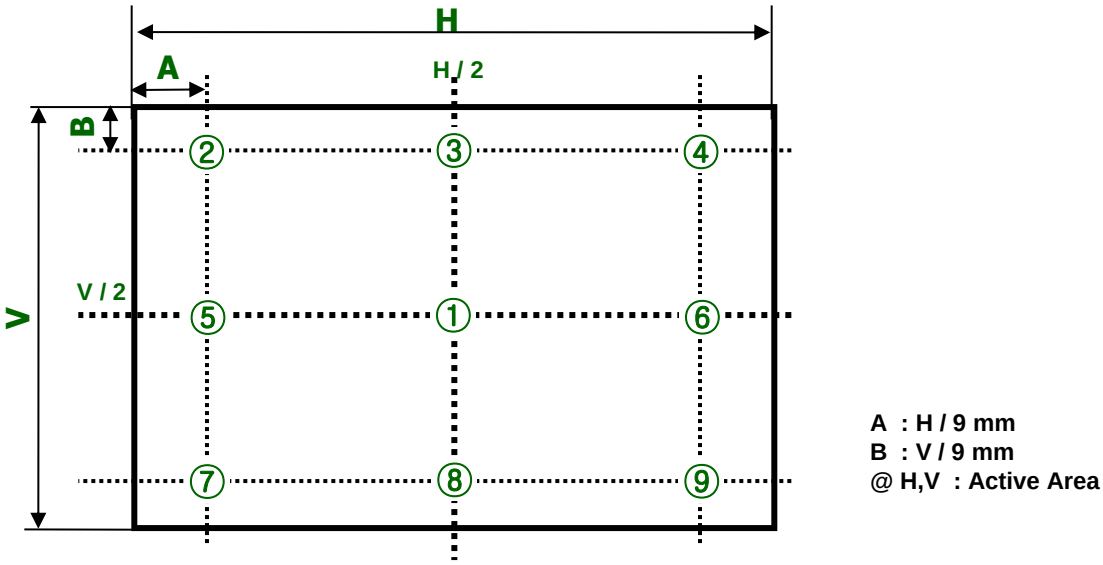

FIG. 2 5 Points for Luminance Measure

Response time is defined as the following figure and shall be measured by switching the input signal for "Gray(N)" and "Gray(M)".

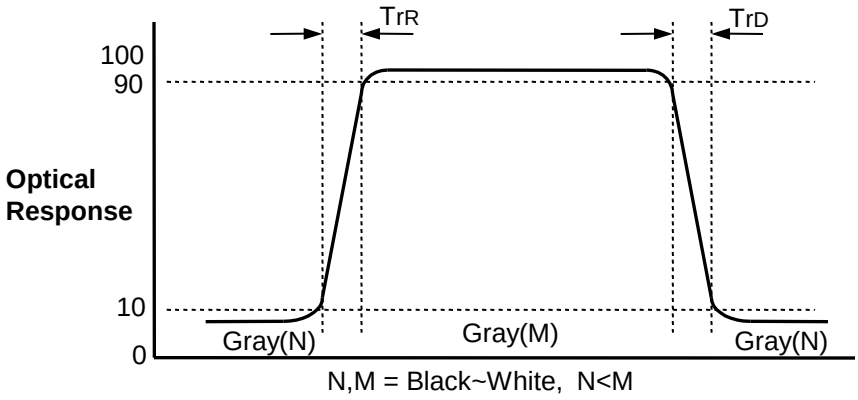

FIG. 3 Response Time

Dimension of viewing angle range

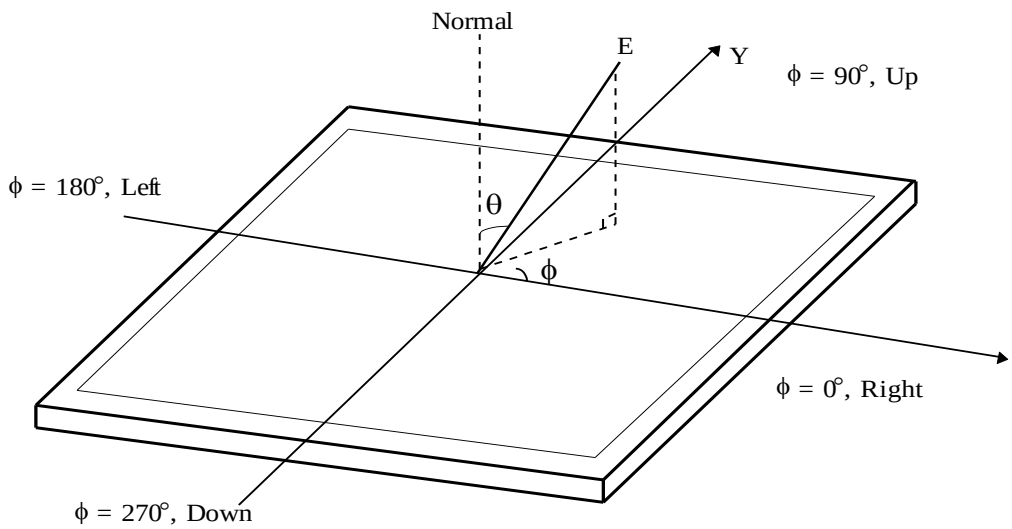

FIG. 4 Viewing Angle

5. Mechanical Characteristics

Table 12 provides general mechanical characteristics.

Table 12. MECHANICAL CHARACTERISTICS

Item	Value	
Outline Dimension	Horizontal	962.0 mm
	Vertical	554.8 mm
	Depth	9.6mm
Bezel Area	Horizontal	946.2mm
	Vertical	534.4mm
Active Display Area	Horizontal	941.184 mm
	Vertical	529.416 mm
Weight	8,500g(Typ., TBD), 9,350g(Max, TBD)	

Note : Please refer to a mechanic drawing in terms of tolerance at the next page.

[FRONT VIEW]

SET : TOP

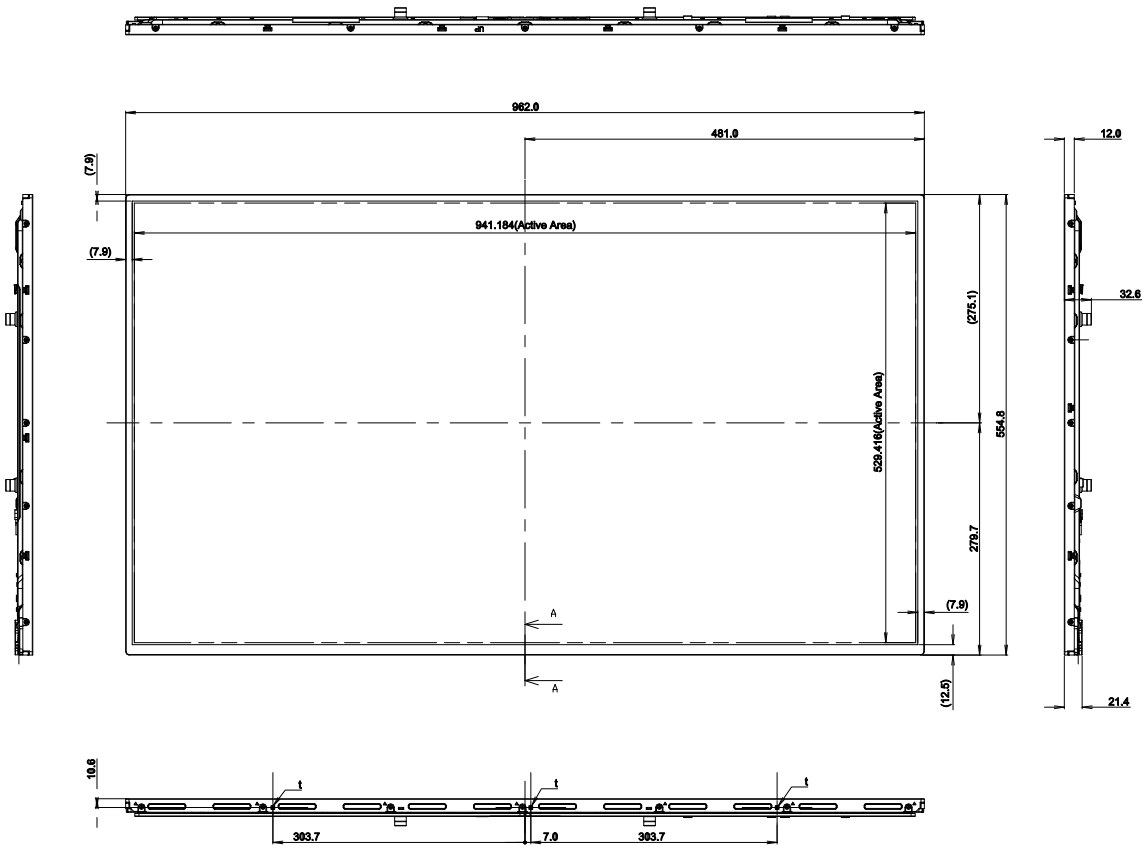

SET : DOWN

Notes
1. Unspecified tolerance is 1.0mm
2. Tilt and partial dispoeition tolerance of display area as following.
 (a) X-Direction : |A-B| ≤ 2.0mm
 (b) Y-Direction : |C-D| ≤ 2.0mm
3. UDM depth&torque : Refer to table.
4. Screw Head max protrusion : 1.0mm
5. The same feature means the same dimension.
6. Designer's approval is required before mass-production.
7. This drawing is only preliminary data amd can be changed.
8. Version (0.1)

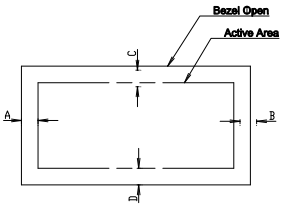

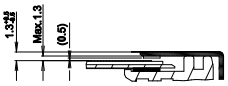

SECTION A-A
SCALE 2/1

Date	Version
2020.01.16	0.0
2020.04.08	0.1

Product Specification

[REAR VIEW]

SET : TOP

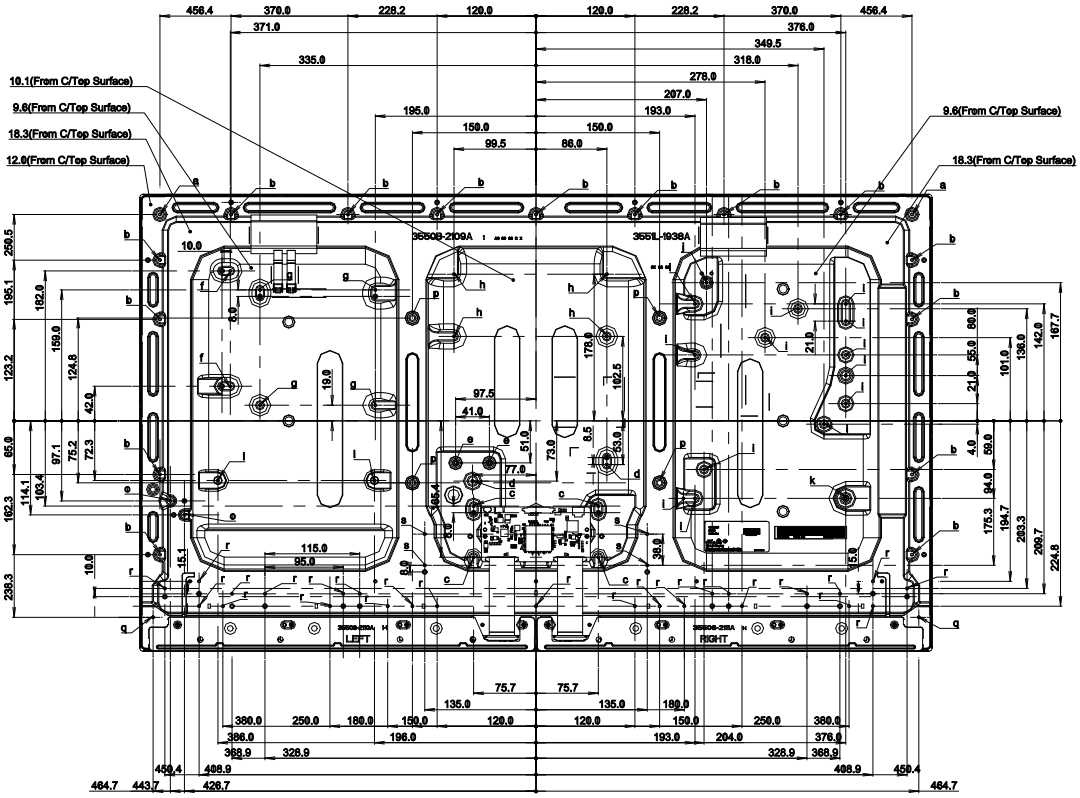

SET : DOWN

Item	UDM Height	Tap	Max Depth (mm)	Max. Torque (kgf. cm)	Notes
a	3. 0	M3. 0	4. 0	8. 0	2ea
b	3. 0	M3. 0	4. 0	8. 0	15ea
c	5. 2	M3. 0	4. 0	8. 0	4ea
d	6. 2	M3. 0	5. 0	8. 0	2ea
e	6. 2	M3. 0	5. 0	8. 0	2ea
f	7. 2	M3. 0	6. 0	8. 0	2ea
g	6. 2	M3. 0	5. 0	8. 0	4ea
h	6. 2	M3. 0	5. 0	8. 0	4ea
i	5. 4	M3. 0	4. 0	8. 0	13ea
j	3. 7	M3. 0	2. 5	8. 0	1ea
k	10. 4	M3. 0	9. 0	8. 0	1ea
l	13. 1	M3. 0	12. 0	8. 0	2ea
o	2. 0	M3. 0	1. 5	8. 0	2ea
p	14. 3	M6. 0	10. 0	15. 0	4ea
q	-	M3. 0	4. 0	8. 0	2ea
r	-	M3. 0	4. 0	8. 0	25ea
s	-	M3. 0	4. 0	8. 0	4ea
t	-	M3. 0	3. 0	8. 0	3ea

6. Reliability

Table 13. ENVIRONMENT TEST CONDITION

No.	Test Item	Condition
1	High temperature storage test	Ta= 60˚C 90% 240h
2	Low temperature storage test	Ta= -20˚C 240h
3	High temperature operation test	Ta= 50˚C 50%RH 500h
4	Low temperature operation test	Ta= 0˚C 500h
5	Humidity condition Operation	Ta= 40 ˚C ,90%RH
6	Altitude operating storage / shipment	0 - 16,400 ft 0 - 40,000 ft

Note : 1. Before and after Reliability test, LCM should be operated with normal function.

7. International Standards

7-1. Safety

a) IEC 62368-1, The International Electro-technical Commission(IEC).
Audio/video, Information and Communication Technology Equipment - Safety - Safety Requirements.
b) EN 62368-1, European Committee for Electro-technical Standardization (CENELEC)
Audio/video, Information and Communication Technology Equipment - Safety Requirements
c) UL 62368-1, UL LLC.
Audio/video, Information and Communication Technology Equipment - Safety Requirements
d) CAN/CSA C22.2 No.62368-1, Canadian Standards Association (CSA).
Audio/video, Information and Communication Technology Equipment - Safety Requirements
e) IEC 60950-1, The International Electro technical Commission (IEC).
Information Technology Equipment - Safety - Part 1 : General Requirements

7-2. Environment

a) RoHS, Commission Delegated Directive (EU) 2015/863 of 31 March 2015 amending Annex II to Directive 2011/65/EU of the European Parliament and of the Council

8. Packing

8-1. Information of LCM Label

a) Lot Mark

A	B	C	D	E	F	G	H	I	J	K	L	M

A,B,C : SIZE(INCH)
E : MONTH
D : YEAR
F ~ M : SERIAL NO.

Note
1. YEAR

Year	2011	2012	2013	2014	2015	2016	2017	2018	2019	2020
Mark	A	B	C	D	E	F	G	H	J	K

2. MONTH

Month	Jan	Feb	Mar	Apr	May	Jun	Jul	Aug	Sep	Oct	Nov	Dec
Mark	1	2	3	4	5	6	7	8	9	A	B	C

b) Location of Lot Mark

Serial NO. is printed on the label. The label is attached to the backside of the LCD module.
This is subject to change without prior notice.

8-2. Packing Form

a) Package quantity in one Pallet : **TBD**

b) Pallet Size : 1300 mm(W) X 1[illegible] (D) X 910 mm(H)

TBD

9. Precautions

Please pay attention to the followings when you use this TFT LCD module.

9-1. Mounting Precautions

(1) You must mount a module using specified mounting holes (Details refer to the drawings).
(2) You should consider the mounting structure so that uneven force (ex. Twisted stress, Concentrated stress) is not applied to the module. And the case on which a module is mounted should have sufficient strength so that external force is not transmitted directly to the module.
(3) Please attach the surface transparent protective film to the surface in order to protect the polarizer. Transparent protective film should have sufficient strength in order to the resist external force.
(4) You should adopt radiation structure to satisfy the temperature specification.
(5) Acetic acid type and chlorine type materials for the cover case are not desirable because the former generates corrosive gas of attacking the polarizer at high temperature and the latter causes circuit break by electro-chemical reaction.
(6) In order to prevent the scratch, do not contact the exposed polarizers with glass, tweezers or anything harder than HB pencil lead. And please do not rub with dust clothes with chemical treatment. Do not touch the surface of polarizer for bare hand or greasy cloth. (Some cosmetics are detrimental to the polarizer.)
(7) When the surface becomes dusty, please wipe gently with absorbent cotton or other soft materials like chamois soaks with petroleum benzine. Normal-hexane is recommended for cleaning the adhesives used to attach front / rear polarizers. Do not use acetone, toluene and alcohol because they cause chemical damage to the polarizer
(8) Wipe off saliva or water drops as soon as possible. Their long time contact with polarizer causes deformations and color fading.
(9) Do not open the case because inside circuits do not have sufficient strength.

9-2. Operating Precautions

(1) Response time depends on the temperature.(In lower temperature, it becomes longer.)
(2) Brightness depends on the temperature. (In lower temperature, it becomes lower.) And in lower temperature, response time(required time that brightness is stable after turned on) becomes longer
(3) Be careful for condensation at sudden temperature change.Condensation makes damage to polarizer or electrical contacted parts. And after fading condensation, smear or spot will occur.
(4) When fixed patterns are displayed for a long time, remnant image is likely to occur.
(5) Module has high frequency circuits. Sufficient suppression to the electromagnetic interference shall be done by system manufacturers. Grounding and shielding methods may be important to minimized the interference.
(6) Please do not give any mechanical and/or acoustical impact to LCM. Otherwise, LCM can't be operated its full characteristics perfectly.
(7) A screw which is fastened up the steels should be a machine screw. (if not, it can causes conductive particles and deal LCM a fatal blow)
(8) Please do not set LCD on its edge.
(9) The conductive material and signal cables are kept away from LED driver inductor to prevent abnormal display, sound noise and temperature rising.

9-3. Electrostatic Discharge Control

Since a module is composed of electronic circuits, it is not strong to electrostatic discharge. Make certain that treatment persons are connected to ground through wrist band etc. And don't touch interface pin directly.

9-4. Precautions for Strong Light Exposure

Strong light exposure causes degradation of polarizer and color filter.

9-5. Storage

When storing modules as spares for a long time, the following precautions are necessary.

(1) Store them in a dark place. Do not expose the module to sunlight or fluorescent light. Keep the temperature between 5˚C and 35˚C at normal humidity.
(2) The polarizer surface should not come in contact with any other object.
It is recommended that they be stored in the container in which they were shipped.
(3) Storage condition is guaranteed under packing conditions.
(4) The phase transition of Liquid Crystal in the condition of the low or high storage temperature will be recovered when the LCD module returns to the normal condition.

9-6. Handling Precautions for Protection Film

(1) The protection film is attached to the bezel with a small masking tape.
When the protection film is peeled off, static electricity is generated between the film and polarizer.
This should be peeled off slowly and carefully by people who are electrically grounded and with well ion-blown equipment or in such a condition, etc.
(2) When the module with protection film attached is stored for a long time, sometimes there remains a very small amount of glue still on the bezel after the protection film is peeled off.
(3) You can remove the glue easily. When the glue remains on the bezel surface or its vestige is recognized, please wipe them off with absorbent cotton waste or other soft material like chamois soaked with normal-hexane.

9-7. Appropriate Condition for Commercial Display

- Generally large-sized LCD modules are designed for consumer applications (TV).
  Accordingly, a long-term display like in Commercial Display application, can cause uneven display including image sticking. To optimize module's lifetime and function, several operating usages are required.

1. Normal operating condition
   - Temperature: 0 ~ 40℃
   - Operating Ambient Humidity : 10 ~ 90 %
   - Display pattern: dynamic pattern (Real display)
   Note) Long-term static display can cause image sticking.

2. Operating usages under abnormal condition
   a. Ambient condition
   - Well-ventilated place is recommended to set up Commercial Display system.
   b. Power and screen save
   - Periodical power-off or screen save is needed after long-term display.

3. Operating usages to protect against image sticking due to long-term static display
   a. Suitable operating time: under 24 hours a day.
   (* The moving picture can be allowed for 24 hours a day)
   b. Static information display recommended to use with moving image.
   - Cycling display between 5 minutes' information(static) display and 10 seconds' moving image.
   c. Background and character (image) color change
   - Use different colors for background and character, respectively.
   - Change colors themselves periodically.
   d. Avoid combination of background and character with large different luminance.
   1) Abnormal condition just means conditions except normal condition.
   2) Black image or moving image is strongly recommended as a screen save.

4. Lifetime in this spec. is guaranteed only when Commercial Display is used according to operating usages.
5. Module should be turned counter-clockwise based on front view when used in portrait mode.

APPENDIX- I

■ Pallet Ass'y

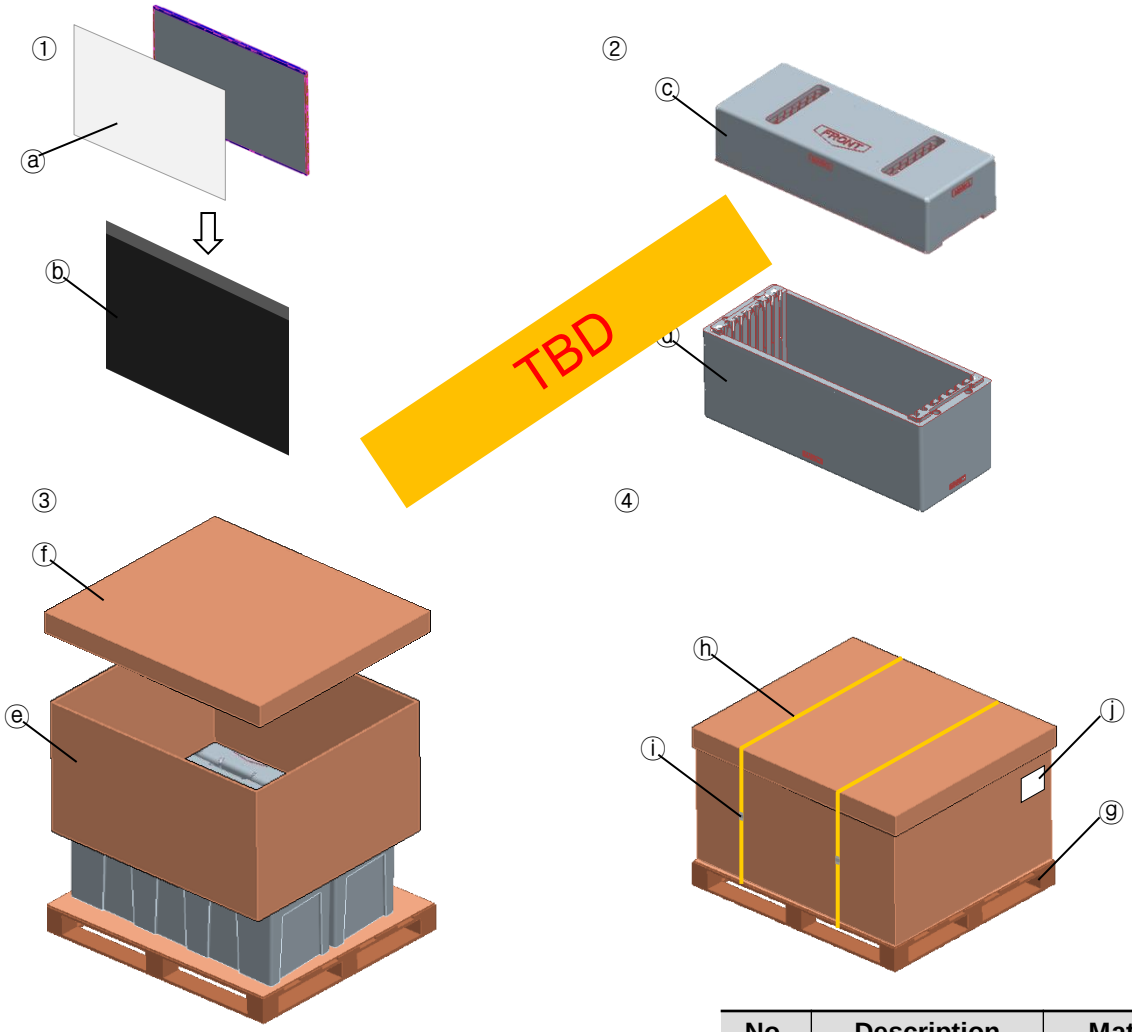

No.	Description	Material
ⓐ	Protect Film	PP+PE
ⓑ	BAG	AL
ⓒ	PackingTop	EPS
ⓓ	Packing,Bottom	EPS
ⓔ	Angle Packing	Single Wall
ⓕ	Angle Cover	Single Wall
ⓖ	Pallet	Plywood
ⓗ	Band	PP
ⓘ	Clip	Steel
Ⓙ	Label	Paper

APPENDIX- II-1

■ LCM Label

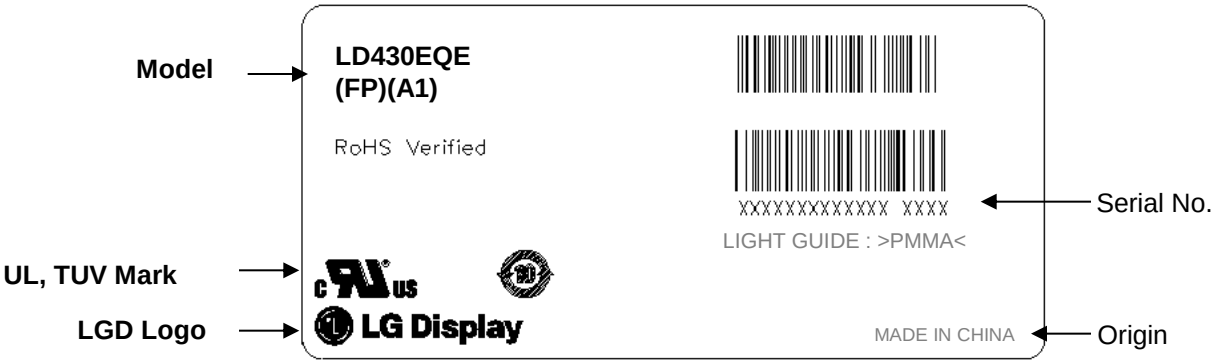

■ Serial No. (See CAS page 24 for more information)

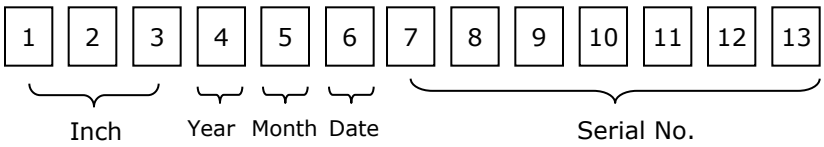

APPENDIX- II-2

■ Pallet Label

APPENDIX- III

■ Required signal assignment for Flat Link (Thine : THCV215) Transmitter

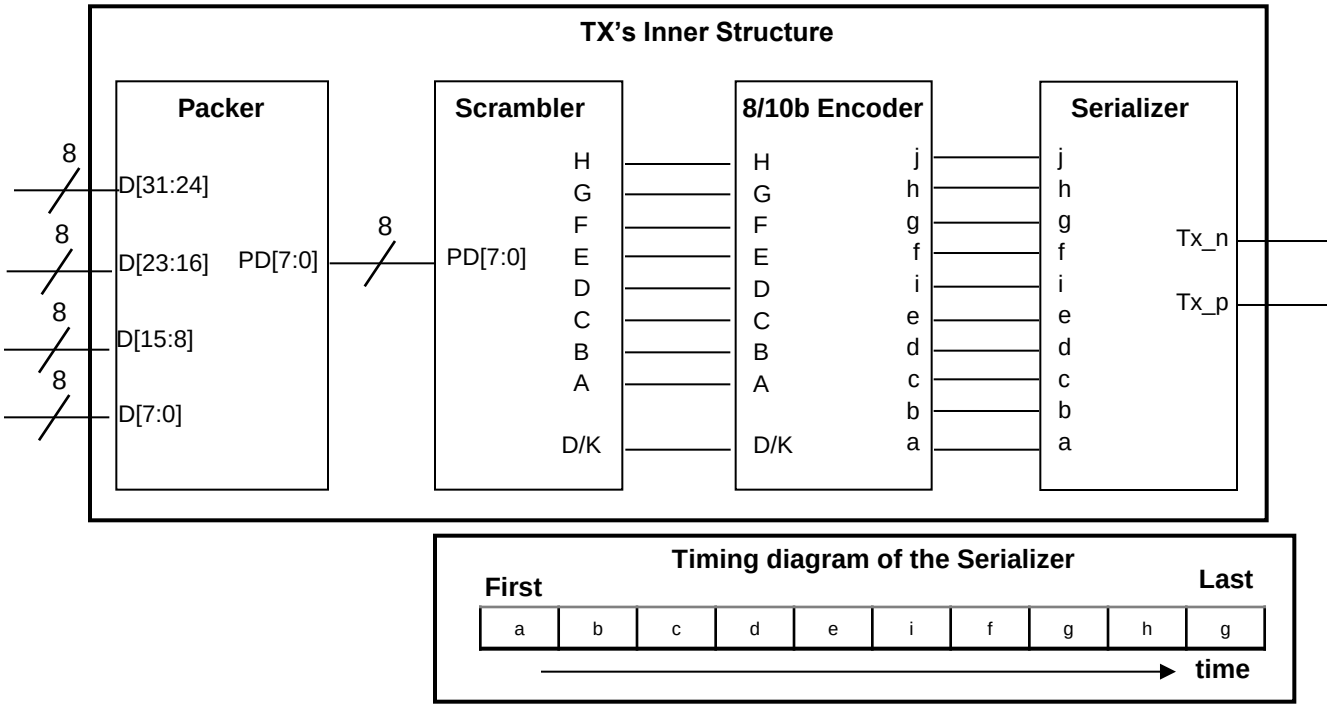

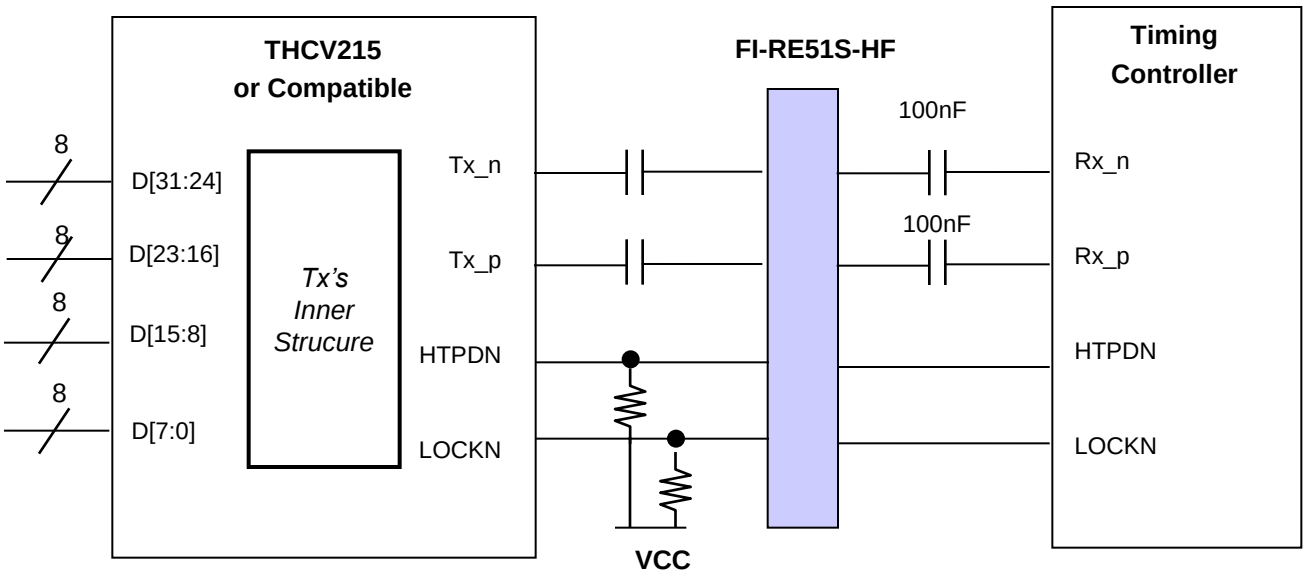

notes: 1. The LCD module uses a 100 nF capacitor on positive and negative lines of each receiver input.
2. Refer to Vx1 Transmitter Data Sheet for detail descriptions. (THCV215 or Compatible)
3. About Module connector pin configuration, Please refer to the Page 8~9.

APPENDIX- IV-1

■ **Option Pin** Circuit Block Diagram

1) Circuit Block Diagram of Data format Selection pin

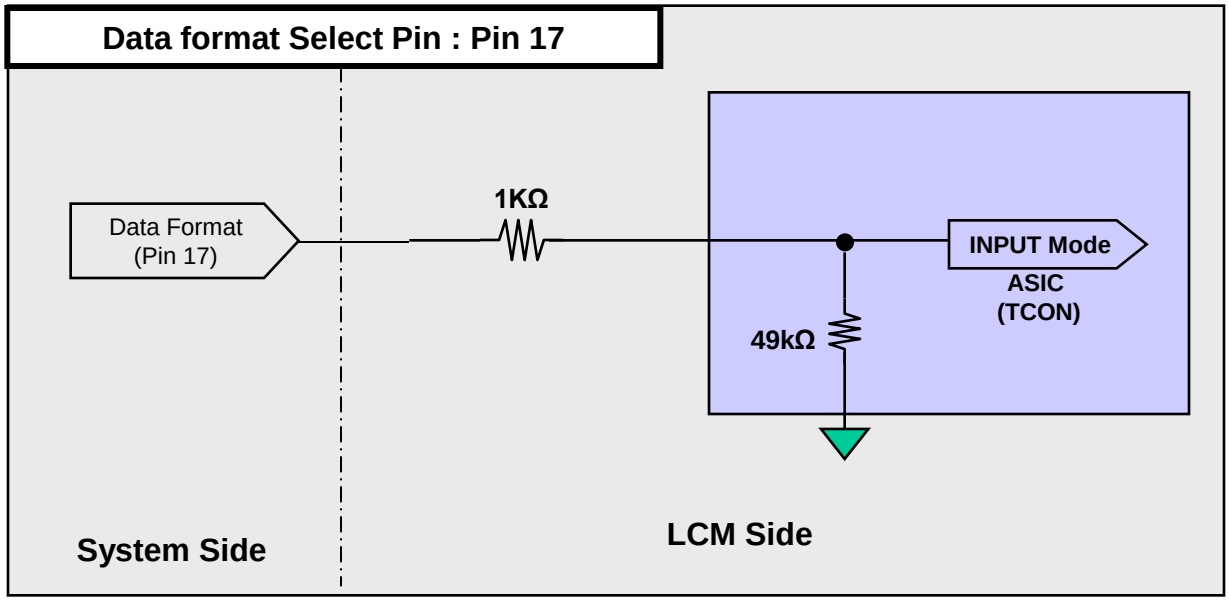

2) Circuit Block Diagram of Bit Selection pin

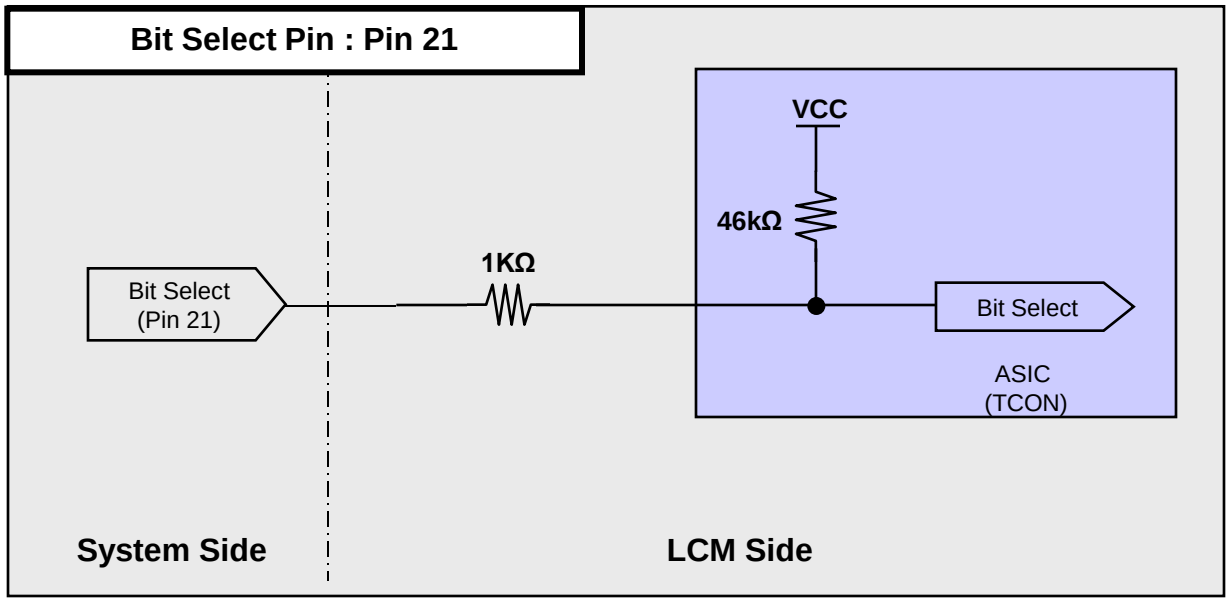

APPENDIX- IV-2

■ **Option Pin** Circuit Block Diagram

3) Circuit Block Diagram of L-Dim Enable pin

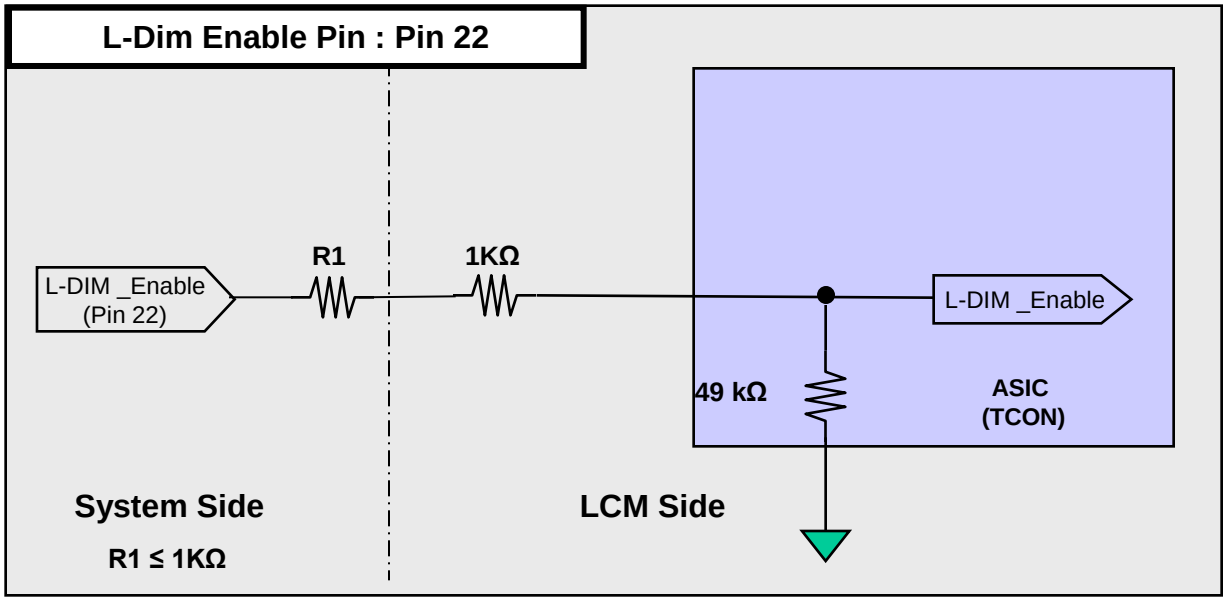

4) Circuit Block Diagram of AGP Selection pin

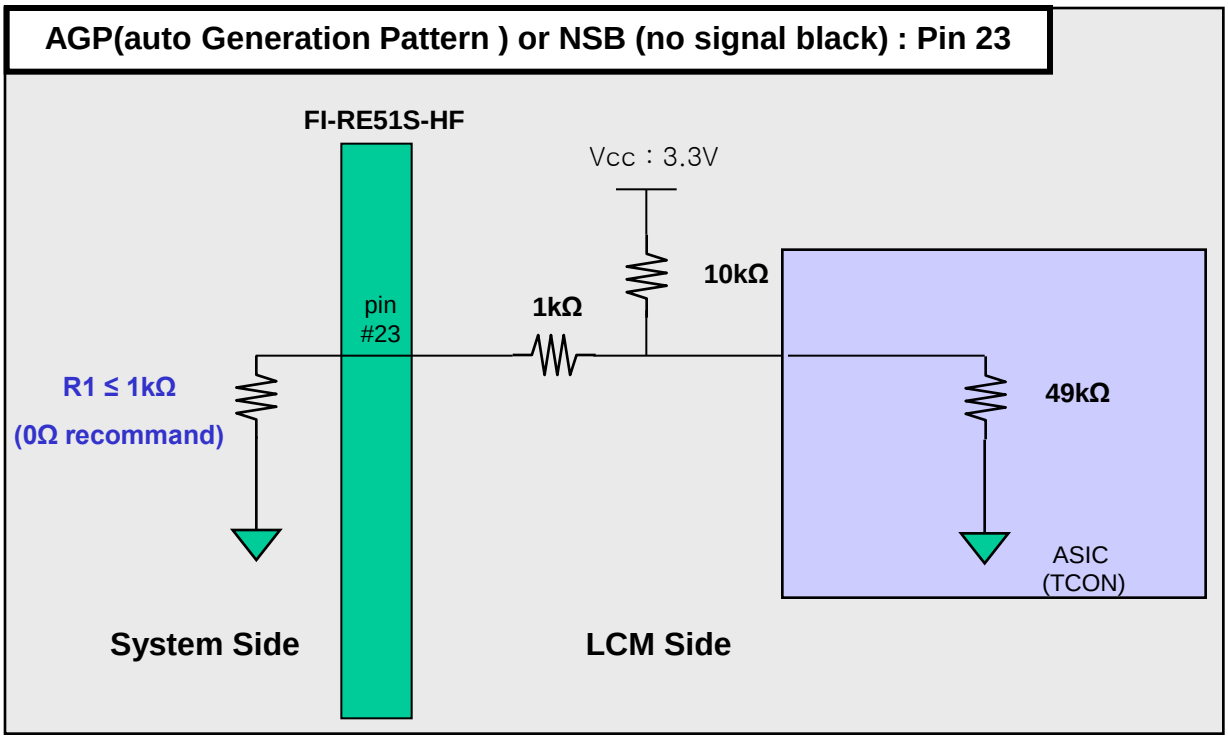

APPENDIX- IV-3

■ **Option Pin** Circuit Block Diagram

5) Circuit Block Diagram of HTPDN/ LOCKN Selection pin

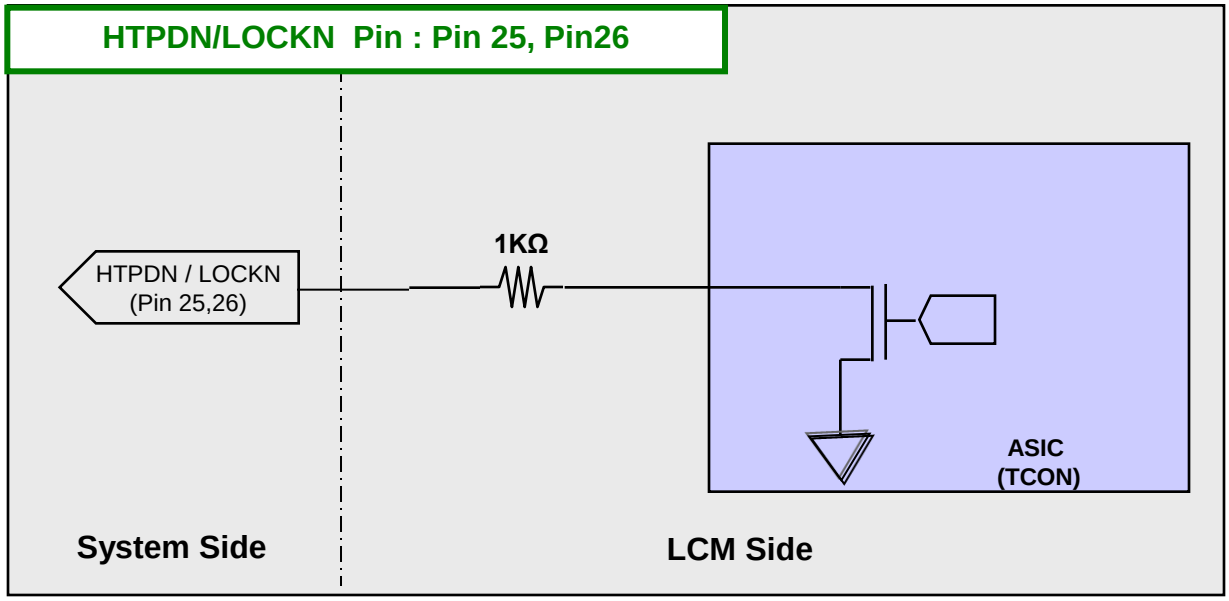

APPENDIX- V

■ LED Array Electrical Spec

Item	Condition	Min	Typ	Max	Uint	Remark
Forward voltage(Vf)	If=75mA [TBD]	75.2 [TBD]	79.7 [TBD]	84.5 [TBD]	V	Ta=25℃
△Vf*1		-	-	1.7	V	

■ Forward Current vs. Forward Voltage

(Ta = 25℃)

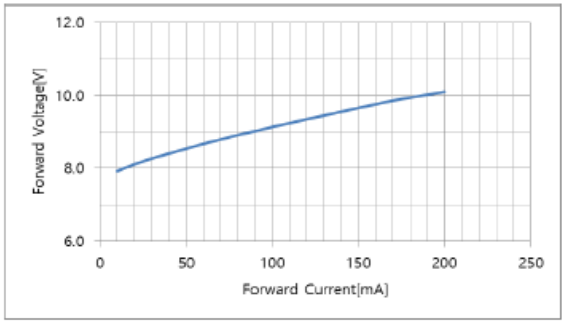

■ Ambient Temperature vs. Forward Voltage

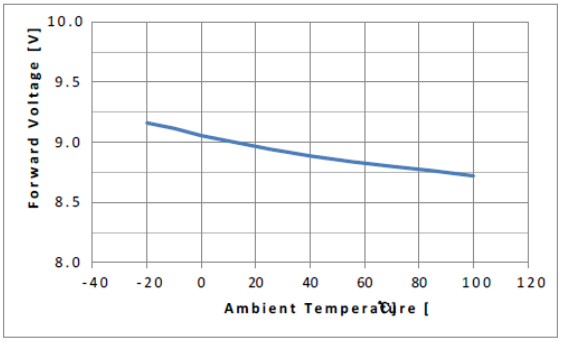

APPENDIX- VI

Gray to Gray Response Time Uniformity

This is only the reference data of G to G and uniformity for LD430EQE-FPA1 model.

1. G to G Response Time :
   Response time is defined as Figure3 and shall be measured by switching the input signal for "Gray (N) " and "Gray(M)".(32Gray Step at 8bit)

2. G to G Uniformity
   The variation of G to G Uniformity , $\delta_{G\ to\ G}$ is defined as :

$$\text{G to G Uniformity} = \frac{Maximum(GtoG) - Typical(GtoG)}{Typical(GtoG)} \leq 1$$

*Maximum (G to G) means maximum value of measured time (N, M = 0 (Black) ~ 1023(White), 128 gray step).

	0Gray	127ray	255Gray	…	895Gray	1023Gray
0Gray		TrR:0G→127G	TrR:0G→255G	…		TrR:0G→1023G
127Gray	TrD:127G→0G		TrR:127G→255G	…	895G	TrR:127G→1023G
255Gray	TrD:255G→0G	TrD:255G→127G			R:255G→895G	TrR:255G→1023G
…	…	…			…	…
895Gray	TrD:895G→0G	TrD:895G→127G		…		TrR:895G→1023G
1023Gray	TrD:1023G→0G	TrD:1023G	255G	…	TrD:1023G→895G	

TBD

3. Sampling Size : 2 pcs

4. Measurement Me … the same rule as optical characteristics measurement.

5. Current Status
   Below table is actual data of production on Apr. 15**. 2012 (LGD RV Event Sample)**

	G to G Response Time [ms]		Uniformity
	Min.	Max.	
# 1	TBD	TBD	TBD
# 2	TBD	TBD	TBD

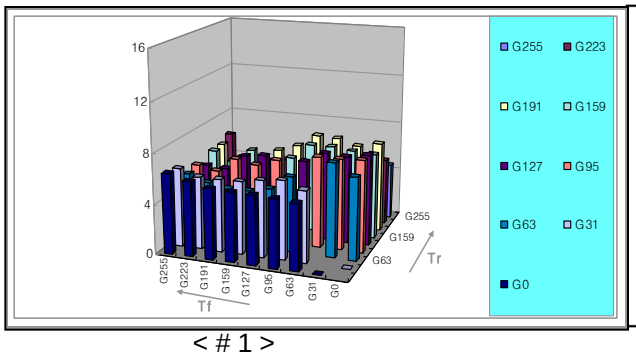

< # 1 >

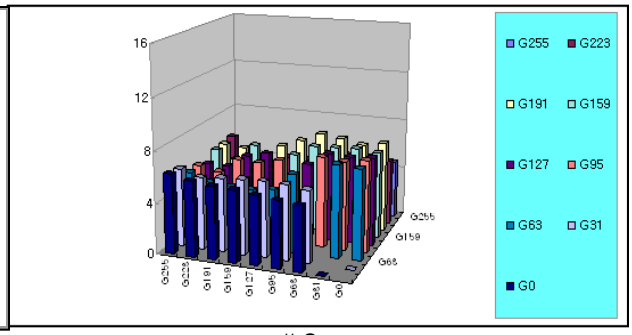

< # 2 >

APPENDIX- VII

■ input mode of pixel data

Mode 1 : Non-Division

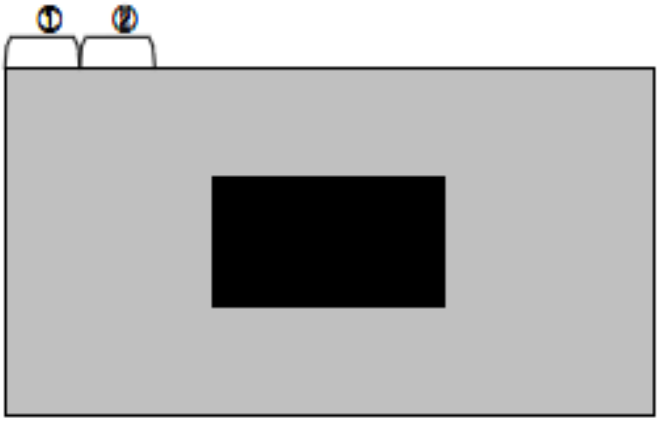

Lane	1st Data	2nd Data	Data#
Lane0	1	9	3833
Lane1	2	10	3834
Lane2	3	11	3835
Lane3	4	12	3836
Lane4	5	13	3837
Lane5	6	14	3838
Lane6	7	15	3839
Lane7	8	16	3840

Mode 2 : 2 Division

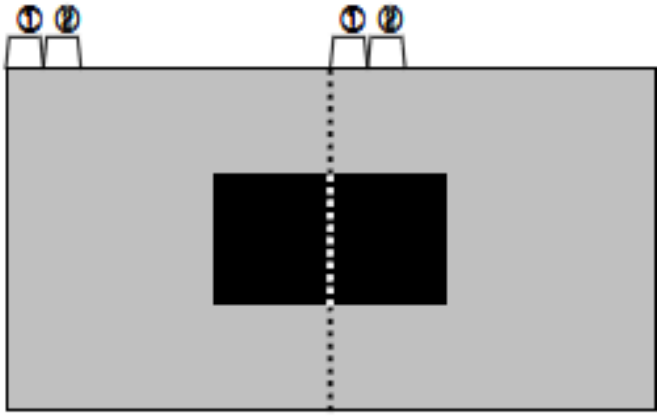

Lane	1st Data	2nd Data	Data#
Lane0	1	5	1917
Lane1	2	6	1918
Lane2	3	7	1919
Lane3	4	8	1920
Lane4	1921	1925	3837
Lane5	1922	1926	3838
Lane6	1923	1927	3839
Lane7	1924	1928	3840

APPENDIX- VIII

■ Vx1 Initialization Characteristics

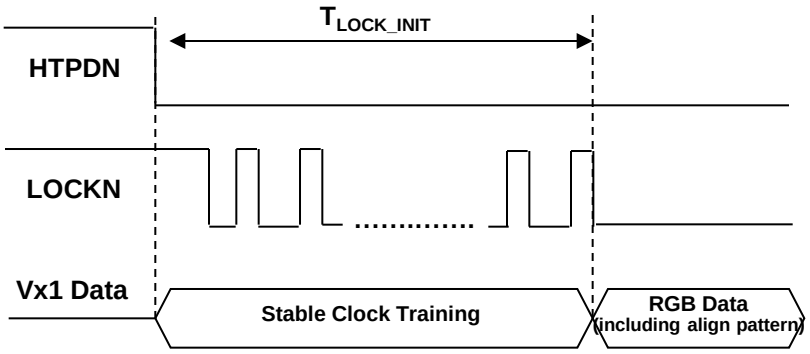

1) UHD60Hz T-Con

Characteristics	Symbol	Min	Typ	Max	Unit
Initial CDR lock time (From Stable CDR training to CDR lock)	T_{LOCK_INT}	0		310	ms

APPENDIX- IX

■ Vx1 Lock Timing In Normal Operation

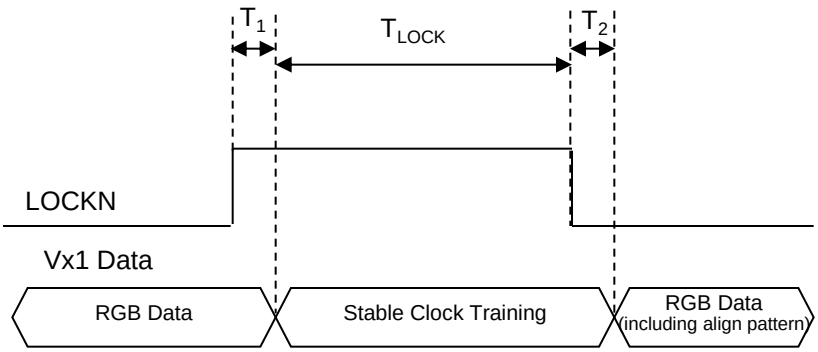

Characteristics	Symbol	Min	Typ	Max	Unit
CDR lock time from stable clock training pattern to LOCKN “Low” in normal operation	T_{LOCK}			2	ms
Latency from LOCKN “High” to clock training pattern	T_1			100	us
Latency from clock “Low” to normal RGB Data	T_2			100	us

※ Vx1 Rx should get clock training pattern in T_1

※ Vx1 Rx should get RGB Data (including align pattern) in T_2

APPENDIX- X

■ The reference method of BL dimming

It is recommended to use synchronous V-sync frequency to prevent waterfall
(Vsync * 2 =P-Dim Frequency)