# SPECIFICATION
# FOR
# APPROVAL

( ) **Preliminary Specification**
(●) **Final Specification**

| Title | **3.2" WqVGA TFT-LCD** |
|---|---|

| BUYER | **Truly** |
|---|---|
| MODEL | |

| SUPPLIER | LG Display Co., Ltd. |
|---|---|
| *MODEL | LH320WQ1 |
| SUFFIX | SH01 |

*When you obtain standard approval,
please use the above model name without suffix

| **SIGNATURE** | **DATE** |
|---|---|
| / | |
| / | |
| / | |

Please return 1 copy for your confirmation with your signature and comments.

| **APPROVED BY** | **DATE** |
|---|---|
| S. D. Jung / Team Leader | |
| **REVIEWED BY** | |
| Y. I. Bang / Part Leader | |
| D. L. Park / Part Leader | |
| **PREPARED BY** | |
| S. H. Kim / Research Engineer | |

**Mobile Panel Design Team.**
**LG Display Co., Ltd.**

## RECORDS OF REVISIONS

| Revision No | Revision Date | Page | DESCRIPTION |
|---|---|---|---|
| Ver. 1.0 | July, 12, 2010 | | Ver. 1.0 was released. |

## 1. General Description

The **LH320WQ1-SH01** model is a Thin Film Transistor- Liquid Crystal Display without polarizer.
The matrix compose a-Si Thin Film Transistor as a active element.
It is a transmissive type display operating in the normally black mode. This TFT-LCD has 3.2 **inch** diagonally measured active display area with WqVGA resolution(240×RGB×400 pixels).
Each pixel is divided into Red, Green and Blue sub-pixels or dots which are arranged in vertical stripes.
The **LH320WQ1-SH01** has been designed to apply the interface method that enables low power.
The **LH320WQ1-SH01** is intended to support applications where thin thickness, low power are critical factors and graphic display are important. In combination with the vertical arrangement of the sub-pixels, the **LH320WQ1-SH01** characteristics provide a high quality display for mobile phone application.

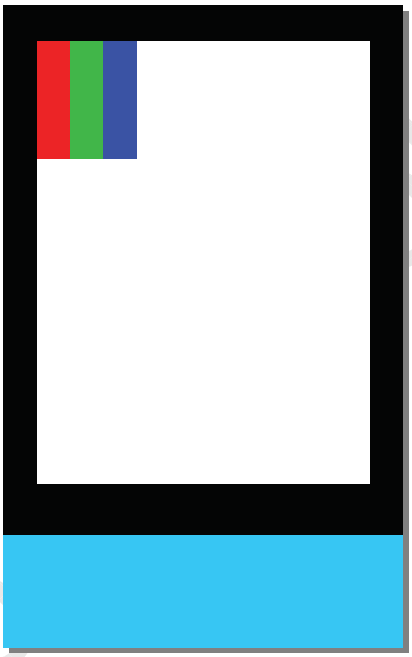

General Features

| | |
|---|---|
| Active Screen Size | 3.2 inch diagonal |
| Outline Dimension | 44.76(H) x 77.40(V) x 0.45(D) mm(Typ.) , Only panel without polarizer |
| Dot Pitch | 0.058mm X 0.174mm |
| Pixel Format | 240×RGB×400 Pixels (RGB Stripes Arrangement) |
| Color Gamut | 72%(Typ.) , Only CF |
| Transmittance (with POL) | 4.8 % |
| Weight (without POL) | 3.6g (Typ.)± 0.36g |
| Rubbing Direction | 80/80/80/80 deg (U/D/L/R @ C/R>10) |
| D-IC | R61509V |
| Display Operating Mode | Transmissive Mode, Normally black |

## 2. Absolute Maximum Ratings

The following are maximum values which, if exceeded, may cause operation or damage to the unit.

**Table 1. ABSOLUTE MAXIMUM RATINGS**

| Parameter | Symbol | Value | | Unit | Notes |
|---|---|---|---|---|---|
| | | Min. | Max. | | |
| LC Operating Voltage *1) | $V_{OP}$ | 4.6 (Typ.) | | V | @ 25±5 ℃ |
| Operating Temperature | $T_{OP}$ | -20 | 70 | ℃ | |
| Storage Temperature | $T_{ST}$ | -30 | 80 | ℃ | |
| Operating Ambient Humidity *2) | $H_{OP}$ | 10 | *3) | %RH | |
| Storage Humidity *2) | $H_{ST}$ | 10 | *4) | %RH | |

Notes:

*1) Liquid Crystal driving voltage.
Due to the characteristics of LC Material, this voltage vary with environmental temperature.

*2) Non-condensation.

*3) Temp. ≤ 60℃ , 90% RH MAX.

*4) Temp. ＞60℃ , Absolute humidity shall be less than 90% RH at 60℃

## 3. Electrical Characteristics

**Table 2. Recommend Parameters for Electrical Characteristics**

@ 25 ± 5°C

| Parameter | Symbol | Value | | | Unit | Notes |
|---|---|---|---|---|---|---|
| | | Min. | Typ. | Max. | | |
| TFT Gate ON Voltage | VGH *1) | 12 | 14 | 16.8 | V | *3) |
| TFT Gate OFF Voltage | VGL *2) | -14 | -11 | -8.4 | V | |
| TFT Common Electrode Amplitude Voltage | Vcom_amp | - | 5.2 | - | V | |
| TFT Kick-Back Voltage | $\Delta V_p$ | 0.2 | - | 0.7 | V | |

Notes:

*1) VGH is TFT Gate On Voltage.

*2) VGL is TFT Gate Off Voltage
The storage capacitance structure of **LH320WQ1-SH01** is Cst (Storage on Common)

*3) Vcom & Vcom offset must be adjusted to optimize display quality: Flicker, Cross-talk, Contrast Ratio and etc.

**We just kindly recommend the setting-voltage as the reference value.**

**In order to get the optimized display quality, the setting-voltage should be changed as based on customer's developing condition.**
**(The display quality could be changed by customer's setting-voltage.)**

## 4. Optical Specification

Optical characteristics are determined after the unit has been 'ON' and stable for approximately 30 minutes in a dark environment at 25 °C. The values specified are at an approximate distance 50 cm from the TFT-LCD surface at a viewing angle of Φ and θ equal to 0 °.

Measurement condition: Refer to next pages (LED back light with 20 mA/1 ea )
*1): with LPL Polarizer
*2): Only Color Filter glass

| Parameter | Symbol | Values | | | Unit | Notes |
|---|---|---|---|---|---|---|
| | | Min | Typ | Max | | |
| *1) Threshold Voltage | Vsat | 4.0 | 4.1 | 4.2 | V | Fig.2 |
| | Vth | 2.0 | 2.1 | 2.2 | V | |
| *1) Transmittance | T(%) | 4.5% | 4.8% | - | % | Fig.1 |
| *1) Contrast Ratio | C/R | 300 | 500 | - | | |
| *1) Response Time | Tr+Tf | - | 35 | 50 | msec | Fig.3, Fig.5 |
| *2) CIE Color Coordinate | Rx | 0.637 | 0.657 | 0.677 | - | |
| | Ry | 0.300 | 0.320 | 0.340 | - | |
| | Gx | 0.267 | 0.287 | 0.307 | - | |
| | Gy | 0.571 | 0.591 | 0.611 | - | |
| | Bx | 0.120 | 0.140 | 0.160 | - | |
| | By | 0.060 | 0.080 | 0.100 | - | |
| | Wx | 0.290 | 0.310 | 0.330 | - | |
| | Wy | 0.307 | 0.327 | 0.347 | - | |
| *1) Viewing Angle | Θl | - | 80 | - | Degree | C/R>10 Fig.4 |
| | Θr | - | 80 | - | | |
| | Θu | - | 80 | - | | |
| | Θd | - | 80 | - | | |

Notes : 1. Contrast Ratio(CR) is defined mathematically as :

$$\text{Contrast Ratio} = \frac{\text{Surface Luminance with all white pixels}}{\text{Surface Luminance with all black pixels}}$$

2. Surface luminance is the center point across the TFT-LCD surface 500 mm from the surface with all pixels displaying white. For more information see FIG 1.

3. Response time is the time required for the display to transition from white to black(Rise Time, Tr) and from black to white(Falling Time, Tf). For additional information see FIG 3.

4. Viewing angle is the angle at which the contrast ratio is greater than 10. The angles are determined for the horizontal or x axis and the vertical or y axis with respect to the z axis which is normal to the TFT-LCD surface. For more information see FIG 4.

5. Optimum contrast is obtained by adjusting the TFT-LCD Threshold voltage(Vth & Vsat)

**FIG. 1 Optical Characteristic Measurement Equipment and Method**

**Pritchard 880 System**

**[Test Equipment Set Up]**

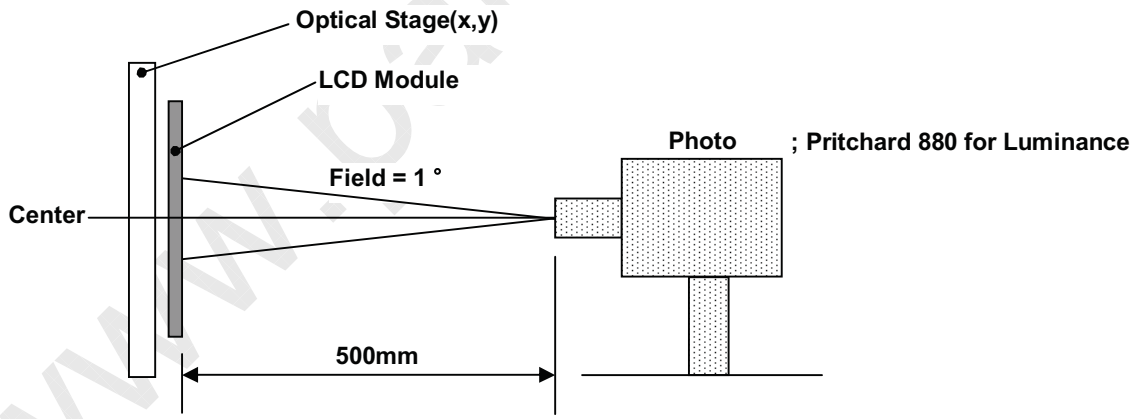


- Measuring Condition ;
  -Measuring surroundings : Dark Room
  -Measuring temperature : $T_a$=25℃
  -Adjust operating voltage to get optimum contrast at the center of the display.
  -Measured value at the center point of LCD panel after more than 30 minutes while backlight turning on.

**FIG. 2 The definition of Vth and Vsat**

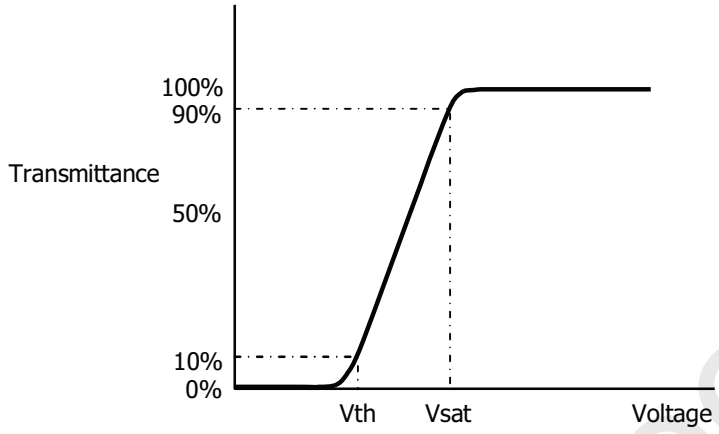


**FIG. 3 The definition of Response Time**

The response time is defined as the following figure and shall be measured by switching the input signal for "black" and "white".

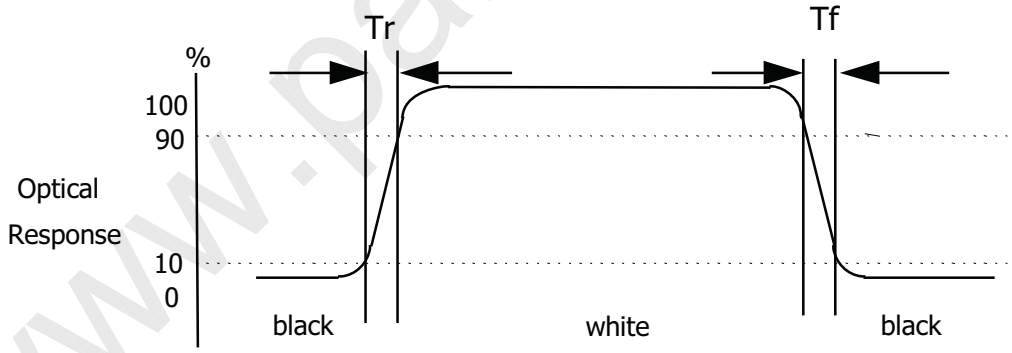


* Voltage conditions for Response time
Vgate : 22V DC
Vdata : 0V~4.5V DC
Vcom : 0V (Ground)

**FIG. 4 The definition of viewing angle**

<dimension of viewing angle range>

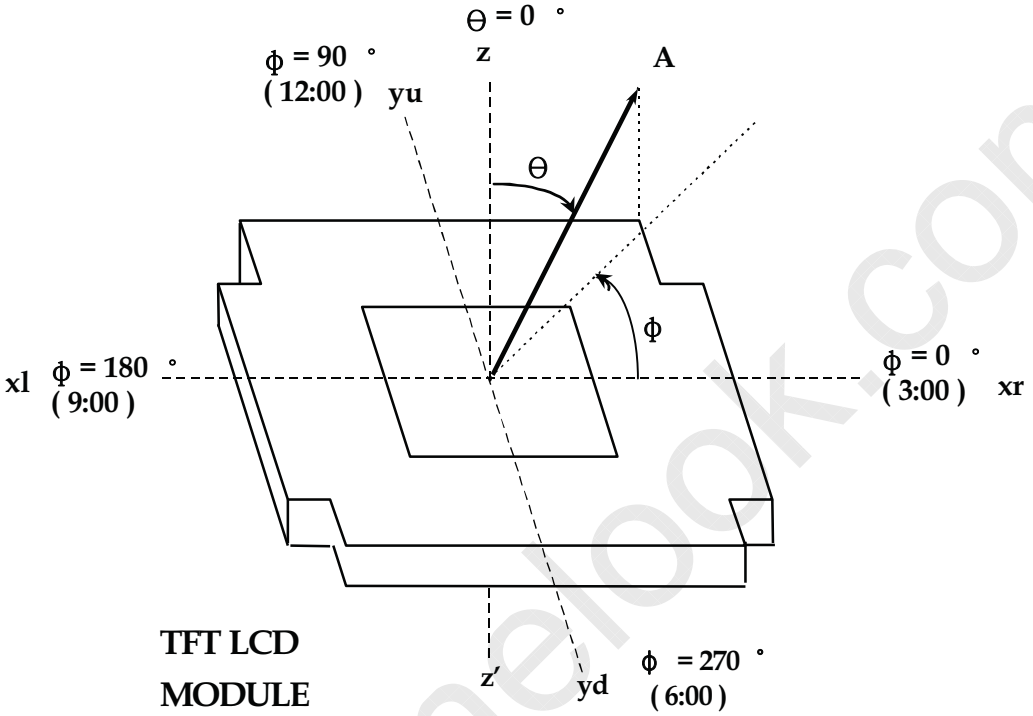


**FIG. 5 Response Time Measurement Equipment and Method**

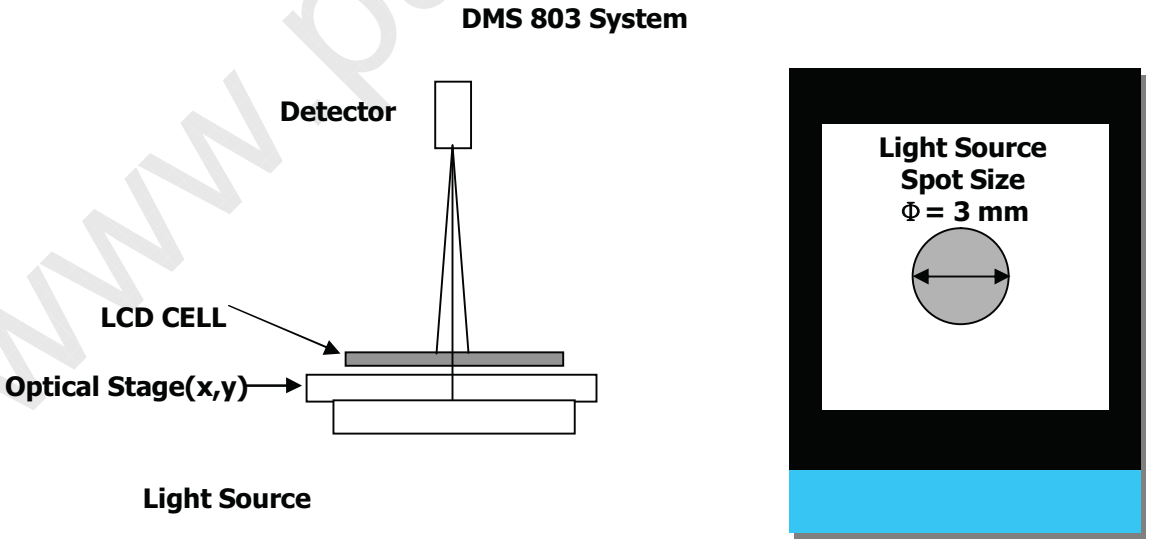


**<Transmissive Mode>**

## 5. Mechanical Characteristics

The contents provide general mechanical characteristics for the model **LH320WQ1-SH01**. In addition the figures in the following page are detailed mechanical drawing of the TFT-LCD.

| Parameter | Symbol | Specification | Unit | Notes |
|---|---|---|---|---|
| Active Area | A | 41.76 | mm | |
| | B | 69.60 | mm | |
| Upper Glass Size | C | 44.76±0.2 | mm | |
| | D | 73.40±0.2 | mm | |
| Bottom Glass Size | E | 44.76±0.2 | mm | |
| | F | 77.40±0.2 | mm | |
| Panel thickness | T | 0.45±0.05 | mm | |
| Cell Margin | G | 1.8±0.1 | mm | |
| | H | 2.0±0.1 | mm | |
| | I | 1.5±0.1 | mm | |
| | J | 1.5±0.1 | mm | |
| COG PAD Area | K | 4.0±0.2 | mm | |
| Upper Glass Edge to D-IC | P | 1.54±0.1 | mm | |
| Bottom Glass Edge to D-IC | O | 1.60±0.1 | mm | |
| D-IC to FPC | Q | 0.674 | mm | R61509V |
| FPC to Glass Edge | R | 0.926±0.1 | mm | |
| FPC LengthZ | U | 19.18 | mm | Center to Center |
| FPC Pad Length(Metal) | V | 0.726 | mm | |
| FPC Pad(metal area) to Glass Edge | W | 0.20±0.1 | mm | |
| Weight | | 3.6±0.36 | g | |

**FIG. 5 Outline Dimension of TFT-LCD Cell**

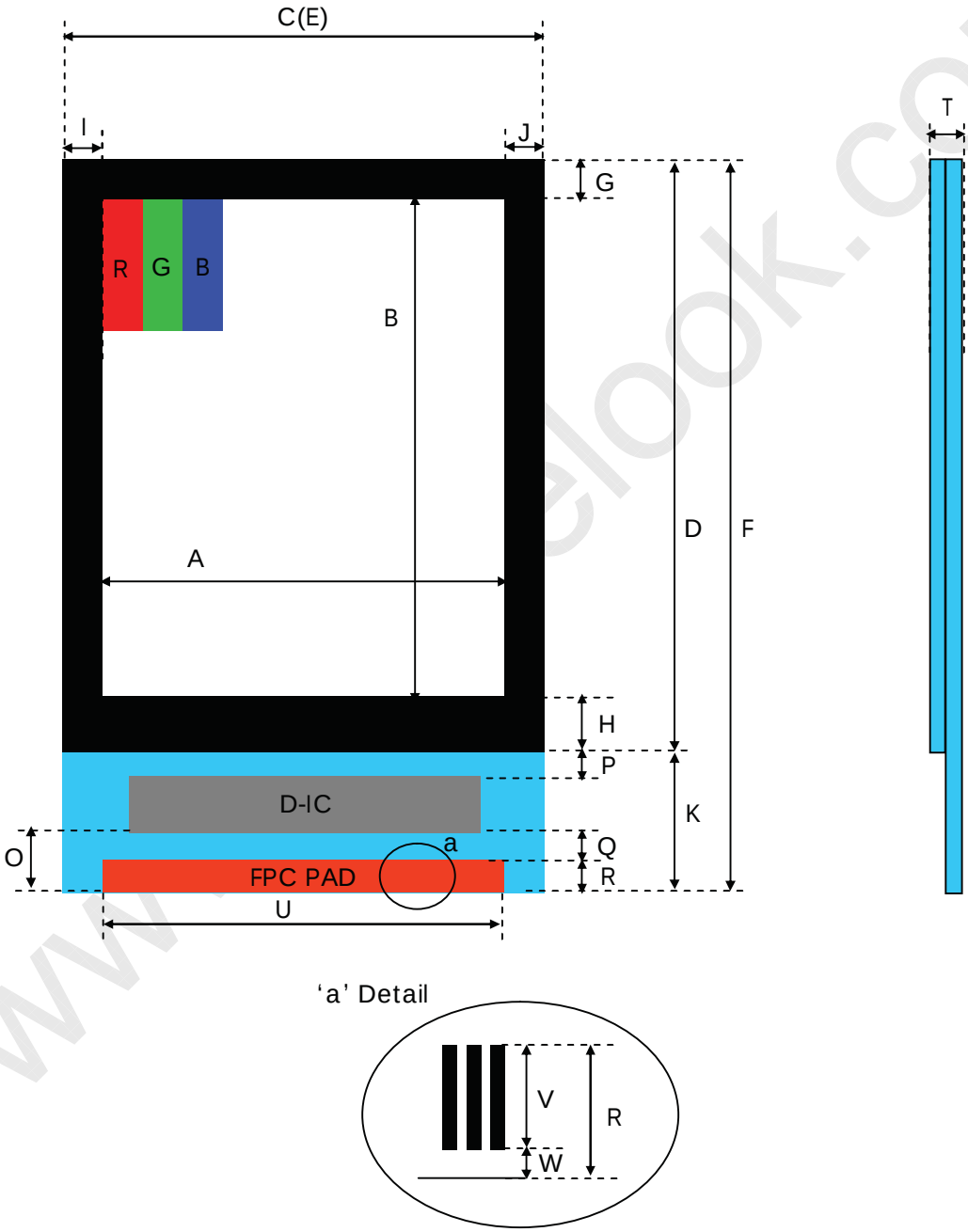

## 6. Reliability Test

Absolute Maximum Conditions

| No. | Parameter | Condition |
|---|---|---|
| 1 | Operating Temperature | -20 ~ 70℃ |
| 2 | Storage Temperature | -30 ~ 80℃ |

Reliability test conditions ( Polarizer characteristics null )

| No. | Test Items | Test Condition | |
|---|---|---|---|
| 1 | High Temperature Storage | T = 80℃ for 240hr | Module (Without Contamination) |
| 2 | Low Temperature Storage | T = -30℃ for 240hr | |
| 3 | High Temperature Operating | T = 70℃ for 240hr | |
| 4 | Low Temperature Operating | T = -20℃ for 240hr *1) | |
| 5 | High Temp. and High Humidity Operating | T = 60℃ /90% for 240hr (But no condensation dew) | |
| 6 | Thermal Shock | -30 ~ 80℃, 100cycle | |
| 7 | Packing Shock | 1coner, 3edge, 6face / 76cmDrop | Packing |
| 8 | Packing Vibration | Random 1.5Grms Z direction 1hr. | |

Notes :

No.1~ No.6 : No guarantee for panel, only for module with the above test conditions.

No.7~ No.8 : Refer to 7-1) Packing Ass'y on page 14.

*1) But no condensation of dew

Result Evaluation Criteria

TFT- LCD Panel should be at room temperature for 2 hours when the display quality test is over. There should be no particular change which might affect the practical display function and the display quality test should be conducted under normal operating condition.

## 7. Packing Form

a) Package quantity in one box : 225 pcs

b) Box Size : 393mm X 339mm X 135mm

### 7-1) PACKING ASS'Y

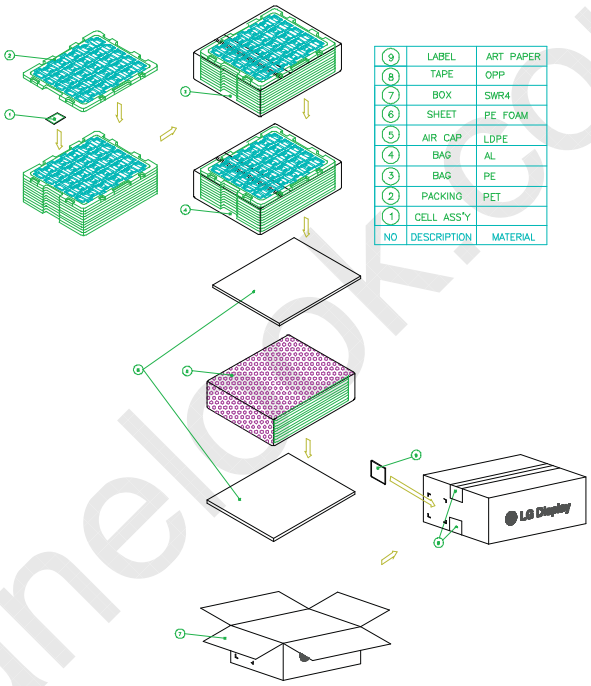

| NO | DESCRIPTION | MATERIAL |
|---|---|---|
| 9 | LABEL | ART PAPER |
| 8 | TAPE | OPP |
| 7 | BOX | SWR4 |
| 6 | SHEET | PE FOAM |
| 5 | AIR CAP | LDPE |
| 4 | BAG | AL |
| 3 | BAG | PE |
| 2 | PACKING | PET |
| 1 | CELL ASS'Y | |

### 7-2) PALLET ASS'Y

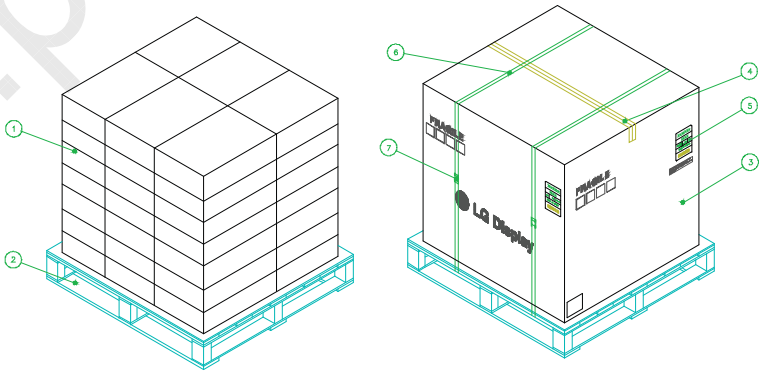

42 BOXES / 1 PALLET

| NO | DESCRIPTION | MATERIAL |
|---|---|---|
| 7 | BAND, CLIP | STEEL |
| 6 | BAND, PACKING | P.P |
| 5 | LABEL | ART PAPER |
| 4 | TAPE | OPP TAPE |
| 3 | ANGLE, PACKING | SW |
| 2 | PALLET | PLYWOOD |
| 1 | PACKING ASS'Y | |

## 8. PRECAUTIONS

Please pay attention to the following when you use this TFT-LCD panel.

### 8-1. MOUNTING PRECAUTIONS

1) When the surface becomes dusty, please wipe gently with absorbent cotton or other soft materials.
2) Since a TFT-LCD Panel is composed of electronic circuits, it is not strong to electrostatic discharge. Make certain that treatment persons are connected to ground through wrist band etc .
3) Do not leave at the high temperature and high humidity in long time.
4) Do not leave the TFT-LCD panel from direct sunlight.
5) Do not contact with water to avoid Metal corrosion.
6) The TFT-LCD Panel shall be installed flat, without twisting or bending

### 8-2. OPERATING PRECAUTIONS

1) The spike noise causes the mis-operation of circuits. It should be lower than following voltage : V=±200mV(Over and under shoot voltage)
2) Response time depends on the temperature.(In lower temperature, it becomes longer.)
3) Brightness depends on the temperature. (In lower temperature, it becomes lower.) And in lower temperature, response time(required time that brightness is stable after turned on) becomes longer.
4) Be careful for condensation at sudden temperature change. Condensation makes damage to polarizer or electrical contacted parts. And after fading condensation, smear or spot will occur.
5) When fixed patterns are displayed for a long time, remnant image is likely to occur.
6) The TFT-LCD shall be operated within the temperature limits specified. when you operate the TFT-LCD panel at below(beyond) the limit specified,It may cause damage or image degradation. This phenomenon may not recover.

### 8-3. ELECTROSTATIC DISCHARGE CONTROL

Since a module is composed of electronic circuits, it is not strong to electrostatic discharge. Make certain that treatment persons are connected to ground through wrist band etc. And don't touch interface pin directly.

## 8-4. PRECAUTIONS FOR STRONG LIGHT EXPOSURE

Strong light exposure causes degradation of color filter. It may not recover

## 8-5. STORAGE

When storing TFT-LCD panel as spares for a long time, the following precautions are necessary.

1) Store them in a dark place. Do not expose to sunlight or fluorescent light. Keep the temperature between 5°C and 35°C at normal humidity.
2) The TFT-LCD glass surface should not come in contact with any other object. It is recommended that they be stored in the container in which they were shipped.
3) As TFT-LCD panels are packed in a vacuum with PE bag and Al bag in Nitrogen gas environment ,

**Customer is required to keep the product under a good condition(25 degree, 50%) to prevent any of unwanted damage from the moisture, and chemicals, etc. And recommended to use it in a short-time period, after it's unpacked.**

## 8-6. HANDLING PRECAUTIONS FOR TFT-LCD Glass

Be careful when TFT-LCD panel is broken.(TFT-LCD is made of glass)