SPECIFICATION
FOR
APPROVAL

( ) Preliminary Specification
(●) Final Specification

Title	**5.5" QHD TFT-LCD**

BUYER	
MODEL	

SUPPLIER	LG Display Co., Ltd.
*MODEL	LH550QH2
SUFFIX	SH02

*When you obtain standard approval,
please use the above model name without suffix

SIGNATURE	**DATE**
_____/_____	_____
_____/_____	_____
_____/_____	_____

Please return 1 copy for your confirmation with your signature and comments.

APPROVED BY	**DATE**
S.D. Kim / Team Leader	9/21
REVIEWED BY	
J.L. Song / Part Leader	9/21
PREPARED BY	
S.J. Choi / Research Engineer	9/21

Mobile Panel Design Team.
LG Display Co., Ltd.

Product Specification

No.	ITEM	Page
-	COVER	1
-	CONTENTS	2
-	RECORD OF REVISIONS	3
1	GENERAL DESCRIPTION	4
2	ABSOLUTE MAXIMUM RATINGS	5
3	ELECTRICAL SPECIFICATIONS	6
4	OPTICAL SPECIFICATIONS	7
5	MECHANICAL CHARACTERISTICS	12
6	RELIABILITY TEST	16
7	FPC Pin Assignment	18
8	Recommended FPC Schematic	20
9	PACKING FORM	21
10	MIPI Register Values	22
11	PRECAUTIONS	30

RECORDS OF REVISIONS

Revision No	Revision Date	Page	Description
Ver. 0.0		-	Release

Product Specification

1. General Description

The **LH550QH2-SH02** model is a Thin Film Transistor- Liquid Crystal Display without polarizer.
The matrix compose LTPS (Low Temperature Poly-Silicon) Thin Film Transistor as a active element.
It is a transmissive type display operating in the normally black mode. This TFT-LCD has 5.46 inch diagonally measured active display area with QHD resolution (1440 X RGB X 2560 pixels).
Each pixel is divided into Red, Green and Blue sub-pixels or dots which are arranged in vertical stripes.
The LH550QH2-SH02 has been designed to apply the interface method that enables low power.
The LH550QH2-SH02 is intended to support applications where thin thickness, low power are critical factors and graphic display are important. In combination with the vertical arrangement of the sub-pixels, the LH550QH2-SH02 characteristics provide a high quality display for mobile phone application.

No	Item	Specification	Remark
1	Display Method	Active Matrix TFT	
2	Display Mode	Transmissive Type	
3	Outline Dimensions [mm]	69.94 (H) x 127.72(V) x 0.3(D)	w/o Polarizer
4	Active Area [mm]	68.04 (H) x 120.96 (V)	
5	Display Resolution	1440(H) X RGB X 2560(V)	
6	Pixel Pitch [mm]	0.01575 × RGB(H) × 0.04725(V)	538 PPI
7	Pixel Arrangement	RGB Vertical stripes	
8	Panel Transmittance	4.5%	w/ APCF Polarizer
9	Color Gamut	70%(typ.), only C/F	CIE standard C light source is used
10	Inversion Type	Column inversion	
11	Interface	MIPI DSI 4-lanes	
12	Driver IC	R69007	
13	Weight [g]	6.5g±10%	w/o Polarizer

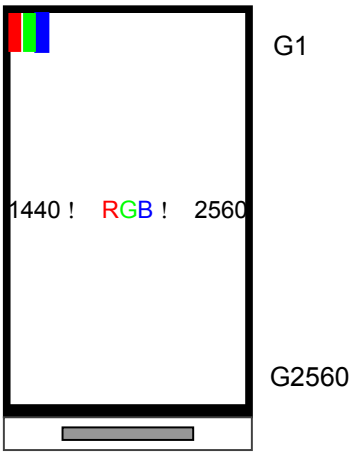

Fig 3.1. Block Diagram of LH550QH2-SH02

2. Absolute Maximum Ratings

The following are maximum values which, if exceeded, may cause operation or damage to the unit.

Item	Symbol	Min.	Max.	Unit	Remark
LC Operating Voltage	V_{OP}	5.2 (Typ.)		V	Note 1)
Storage Humidity	H_{STG}	10	90	%RH	Note 2), 3)
Storage Temperature	T_{STG}	-30	80	°C	Note 2), 3)
Operating Ambient Humidity	H_{OP}	10	90	%RH	Note 2), 3)
Operating Ambient Temperature	T_{OP}	-20	70	°C	Note 2), 3)

Note 1) Liquid Crystal (LC) driving voltage.
Due to the characteristics of LC materials, this voltage vary with environmental temperature.
The typical value is the LC driving voltage at the room temperature, 25±5℃.

Note 2) Temp. ≤ 60℃, 90% RH MAX.
Temp. > 60℃, Absolute humidity shall be less than 90% RH at 60℃.

Note 3) The diagram below indicates the peripheral environment of the module.
The wet bulb temperature should be kept under 39 °C and there should be no compensation.
If the LSI is used above these absolute maximum ratings, it may become permanently damaged.

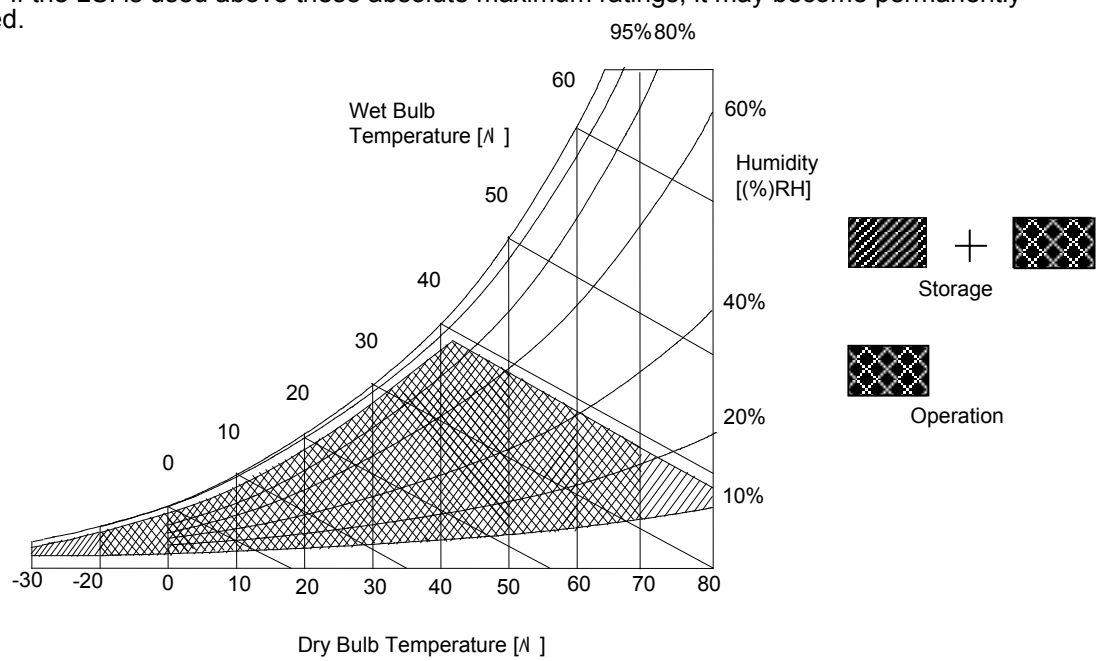

3. Electrical Specifications

T_a = 25˚±5C

Item	Symbol	Min.	Typ.	Max.	Unit	Note
TFT Gate ON Voltage	VGH	8	9	10	V	Note 1)
TFT Gate OFF Voltage	VGL	-10	-9	-8	V	Note 2)
TFT Common Electrode Voltage	VCOM	-0.618	-0.418	-0.218	V	Note 3)
Frame Frequency	Ff	60			Hz	-

Note 1) VGH is TFT Gate operating voltage.

Note 2) VGL is TFT Gate off voltage.

TFT Gate ON / OFF Voltage (*Note1),2)) is based on VSP 5.5V, VSN -5.5V.

And the Voltage can be guaranteed according to recommended initial code in LGD CAS.

Note 3) VCOM must be adjusted to optimize display quality: Cross-talk, Contrast Ratio and etc.

In order to get the optimized display quality, the setting-voltage should be changed as based on customer's developing condition.

(The display quality could be changed by customer's setting-voltage.)

We just kindly recommend the setting-voltage as the reference value.

In order to get the optimized display quality, the setting-voltage should be changed as based on customer's developing condition.
(The display quality could be changed by customer's setting-voltage.)

4. Optical Specification

Optical characteristics are determined after the unit has been 'ON' and stable for approximately 30 minutes in a dark environment at 25 °C. The values specified are at an approximate distance 50 cm from the TFT-LCD surface at a viewing angle of ! and ! equal to 0 °.

Measurement condition: Refer to next pages (LED back light with 20 mA/1 ea)

*1): with LGD Polarizer base on C light spectrum
(Top: 0-RT + HC)
(Bottom : 0-RT + APF + Diffuser50%)

*2): Only Color Filter glass base on C light spectrum

Parameter	Symbol	Values			Unit	Notes
		Min	Typ	Max		
*1) Threshold Voltage	Vsat	3.9	4.1	4.3	V	Fig.2
	Vth	1.9	2.1	2.3	V	
*1) Transmittance	T(%)	3.9	4.5	-	%	Fig.1,Note2
*1) Contrast Ratio	C/R	1000	1500	-		
*1) Response Time	Tr+Tf	-	-	35	msec	Fig.3
*2) CIE Color Coordinate	Rx	0.637	0.652	0.667	-	
	Ry	0.298	0.313	0.328	-	
	Gx	0.246	0.261	0.276	-	
	Gy	0.548	0.563	0.578	-	
	Bx	0.126	0.141	0.156	-	
	By	0.070	0.085	0.100	-	
	Wx	0.277	0.292	0.307	-	
	Wy	0.293	0.308	0.323	-	
*1) Viewing Angle	Θl	70	80	-	Degree	C/R>10 Fig.4
	Θr	70	80	-		
	Θu	70	80	-		
	Θd	70	80	-		
*1) Cross Talk	C/T	-	3	5	%	Fig. 7

Note1) Optical Specifications are depended on the Initial Code.

Note2) LGD Recommend AVEE/AVDD = ± 5.5V and Vop = ± 5.2 V (refer to page 5) in order to meet above transmittance

Notes : 1. Contrast Ratio(CR) is defined mathematically as :

$$\text{Contrast Ratio} = \frac{\text{Surface Luminance with all white pixels}}{\text{Surface Luminance with all black pixels}}$$

2. Surface luminance is the center point across the TFT-LCD surface 240 mm from the surface with all pixels displaying white. For more information see FIG 1.

3. Response time is the time required for the display to transition from black to white(Rise Time, Tr) and from white to black(Falling Time, Tf). For additional information see FIG 3.

4. Viewing angle is the angle at which the contrast ratio is greater than 10. The angles are determined for the horizontal or x axis and the vertical or y axis with respect to the z axis which is normal to the TFT-LCD surface. For more information see FIG 4.

5. Optimum contrast is obtained by adjusting the TFT-LCD Threshold voltage(Vth & Vsat)

FIG. 1 Optical Characteristic Measurement Equipment and Method

Pritchard 880 System

[Test Equipment Set Up]

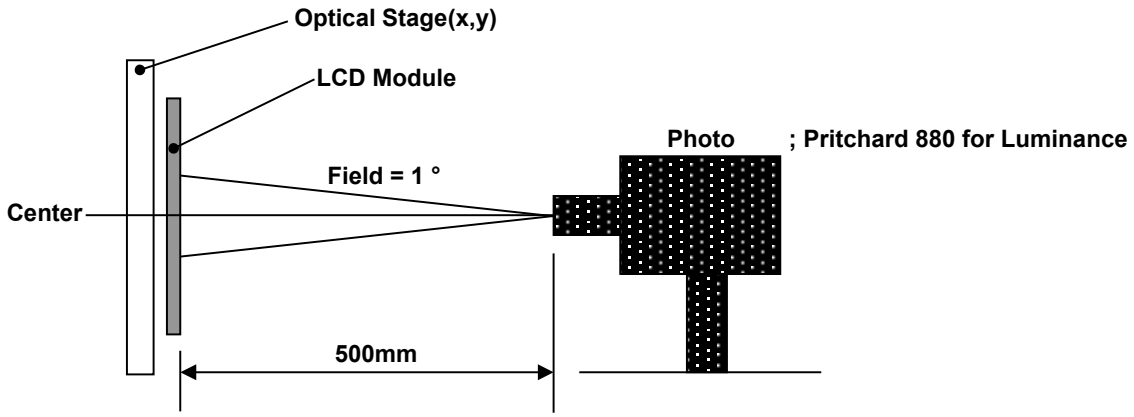

- Measuring Condition ;
  -Measuring surroundings : Dark Room
  -Measuring temperature : T_a=25|
  -Adjust operating voltage to get optimum contrast at the center of the display.
  -Measured value at the center point of LCD panel after more than 30 minutes while backlight turning on.

FIG. 2 The definition of Vth and Vsat

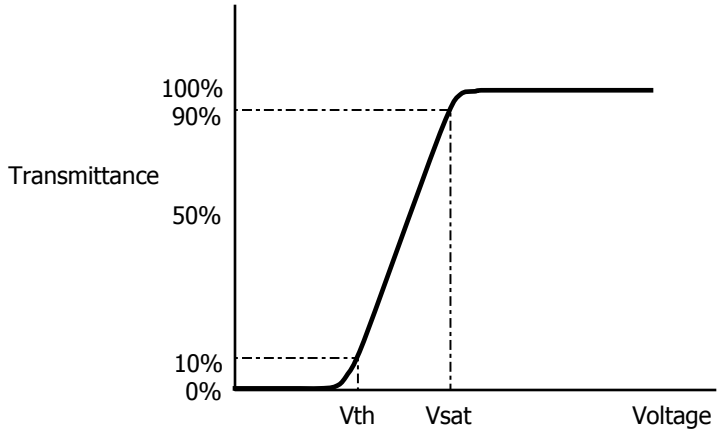

FIG. 3 The definition of Response Time

The response time is defined as the following figure and shall be measured by switching the input signal for "black" and "white".

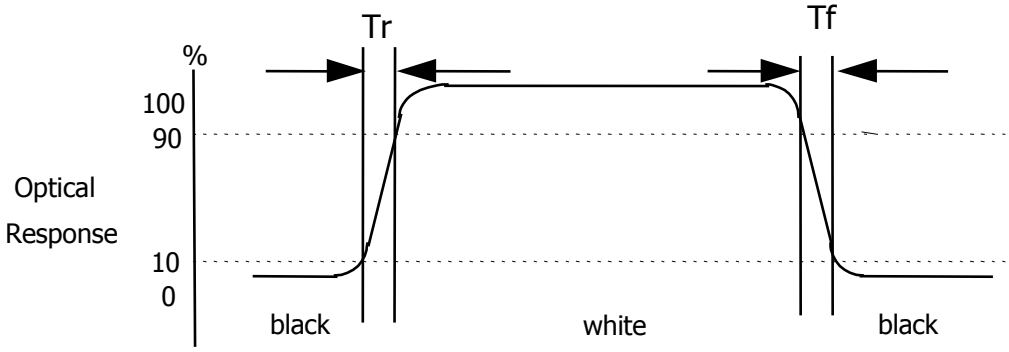

* Voltage conditions for Response time at room temp. (25℃)

Vgate : 9V DC
Vdata : 0V~5V DC
Vcom : 0V (Ground)

FIG. 4 The definition of viewing angle

<dimension of viewing angle range>

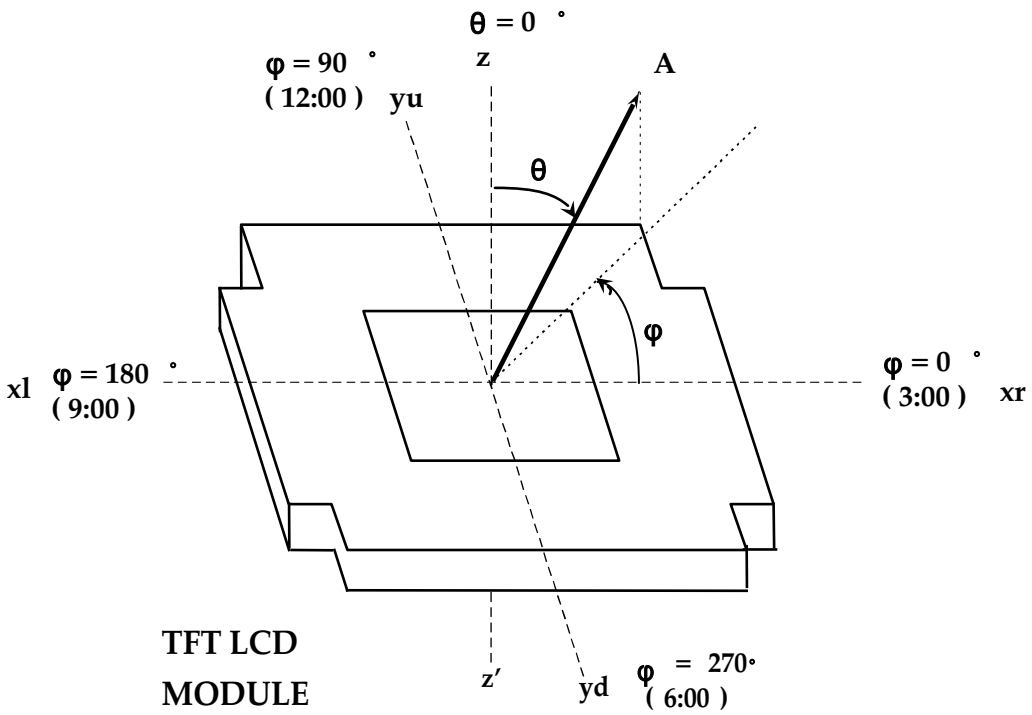

FIG. 5 Response Time Measurement Equipment and Method

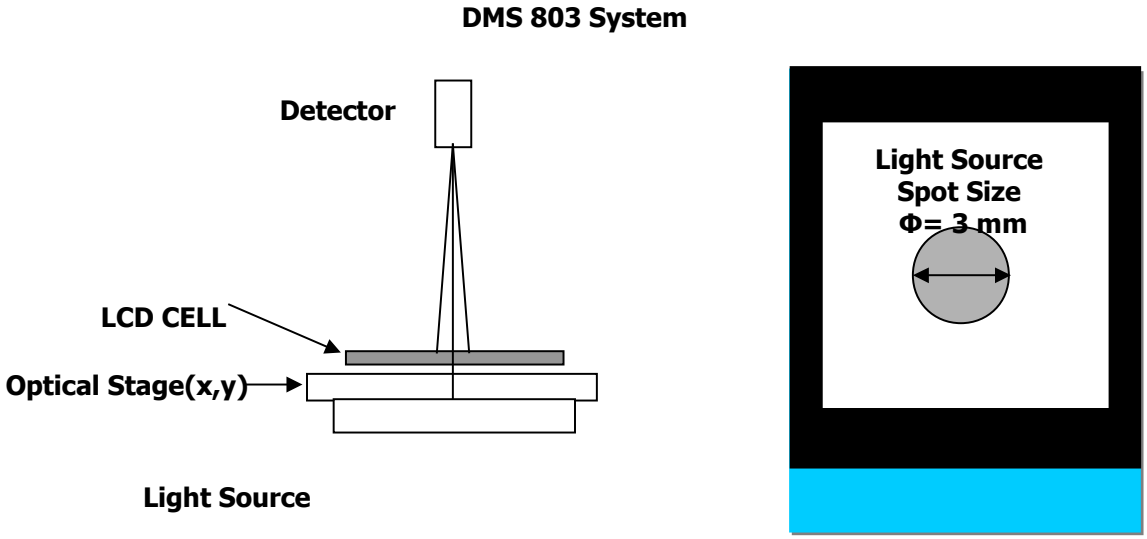

<Transmissive Mode>

Fig. 6 Flicker Measurement Equipment and Pattern

The flicker level should be measured with One pixel vertical gray/black stripes. The flicker is essentially a ratio of the powers in the frequency spectrum at 30 Hz (PX) and 0 Hz (P0- DC level).

(ЧFlicker Measurement Equipment : Konica Minolta CA-210)

$$F = 10 \text{ Log } (P_X / P_0)$$

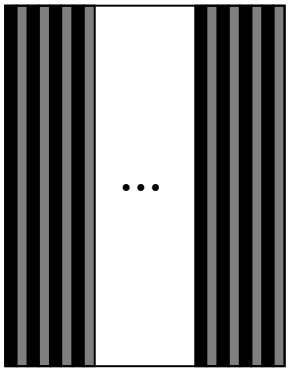

Fig. 7 The Definition of Cross Talk

A: Luminance for A1 ~ A2 with all 127gray pixels

B: Luminance for B1 ~ B2 with 127gray pixels when the 1/3 white box is applied

$$\text{Crosstalk [\%]} = \text{Maximum}\left[\text{Absolute}\left(\frac{A - B}{A}\right)\right]$$

[Test Equipment Set Up]

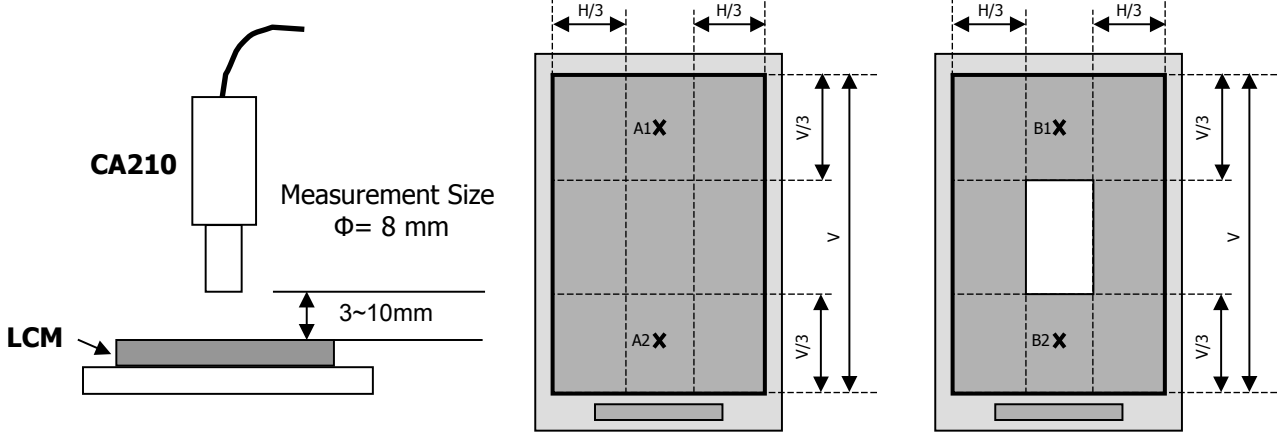

Gray 127 **1/3 white C/T**

- Measuring Condition ;
  - BLU turn "ON", Wait until the luminance becomes stable.
  - Measurement sequence are "A1 → PTN Change → B1" & "A2 → PTN Change → B2".

5. Mechanical Characteristics

The contents provide general mechanical characteristics for the model **LH550QH2-SH02**. In addition the figures in the following page are detailed mechanical drawing of the TFT-LCD. (R69007)

Parameter	Symbol	Specification	Unit	Notes
Active Area	A	68.04	㎜	
	B	120.96	㎜	
Upper Glass Size	C	69.94±0.15	㎜	
	D	124.11±0.15	㎜	
Bottom Glass Size	E	69.94±0.15	㎜	
	F	127.72±0.15	㎜	
Panel thickness	T	0.3±0.05	㎜	
Cell Margin	G	0.95±0.1	㎜	
	H	2.2±0.1	㎜	
	I	0.95±0.1	㎜	
	J	0.95±0.1	㎜	
COG PAD Area	K	3.61±0.2	㎜	
Upper Glass Edge to D-IC	P	0.50±0.1	㎜	
Bottom Glass Edge to D-IC	O	1.65±0.1	㎜	
D-IC to FPC	Q	0.4	㎜	
FPC to Glass Edge	R	1.25±0.1	㎜	
FPC Length	U	33.895	㎜	
FPC Pad Length(Metal)	V	0.6	㎜	
FPC Pad(metal area) to Glass Edge	W	0.65±0.1	㎜	
Ag Dotting PAD Size	X	3.0X1.4	㎜	
Bottom Glass Edge to Ag Dotting PAD	Y	1.6±0.1	㎜	
	Z	2.210±0.1	㎜	
Weight		6.5	g	

Note) This panel apply temperature compensation. Please be noted.

FIG. 8 Outline Dimension of TFT-LCD Cell

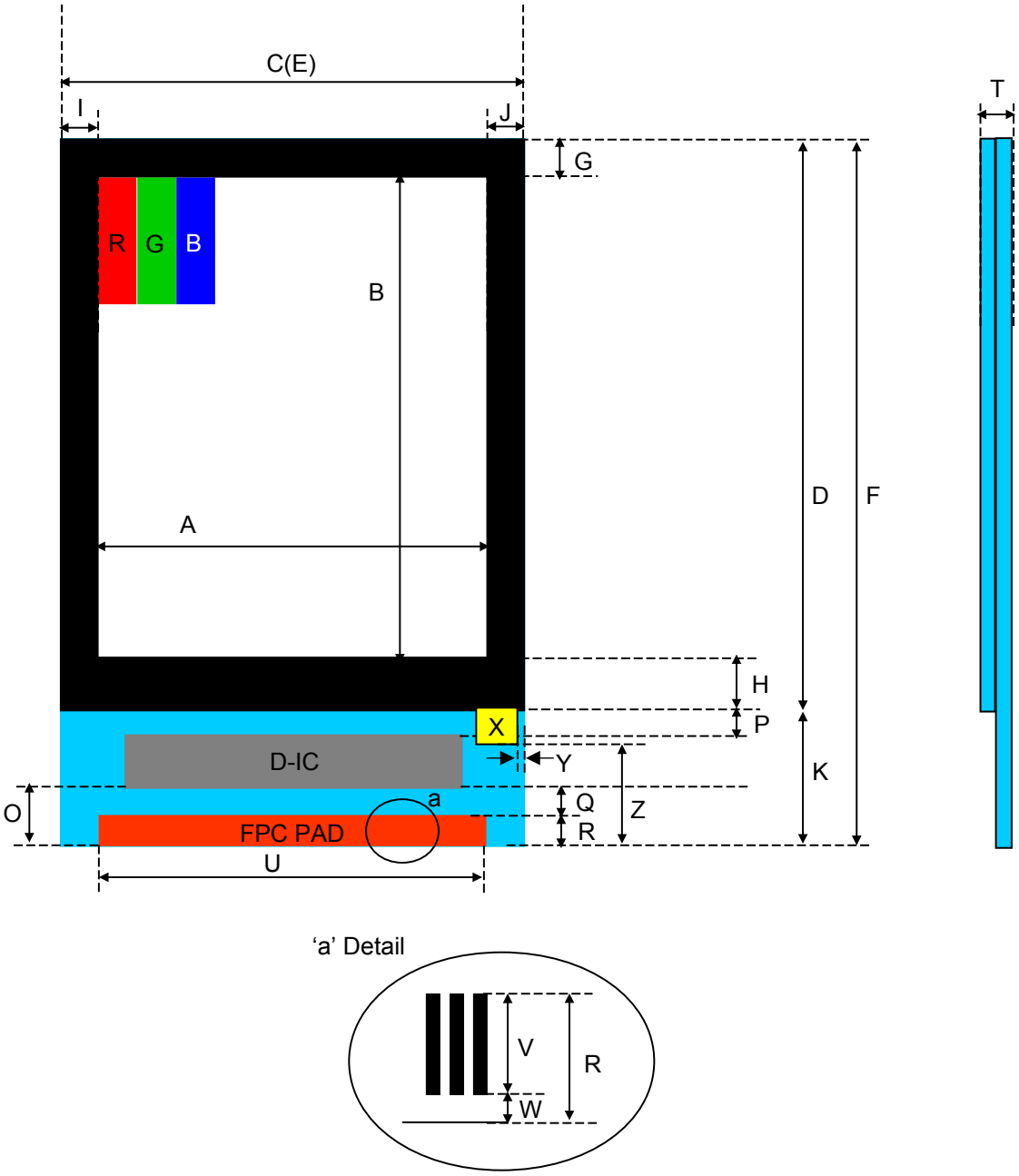

FIG. 9 Detail Dimension of TFT-LCD Cell

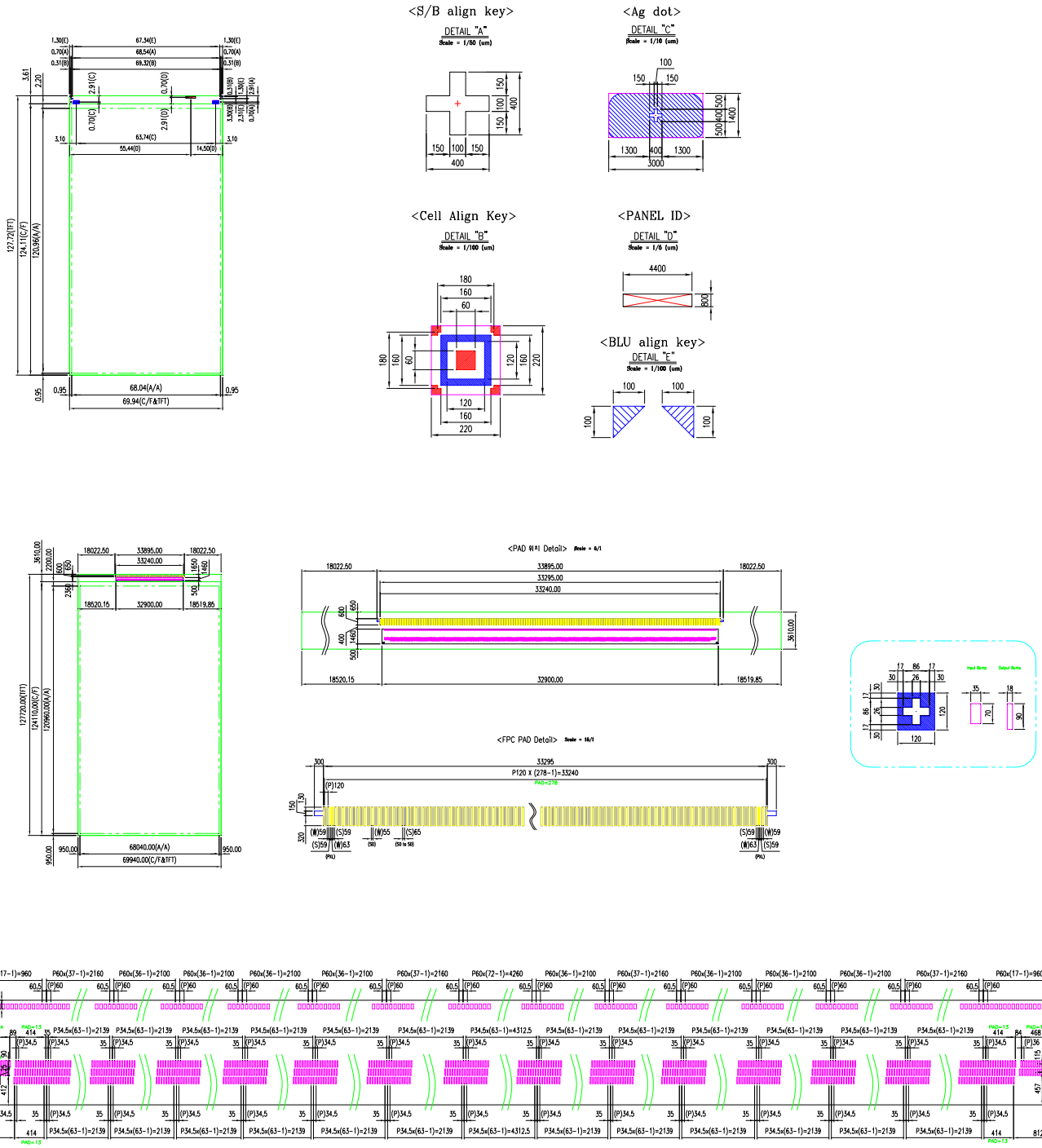

Product Specification

FIG. 10 Auto-Probe Pad Dimension of TFT-LCD Cell

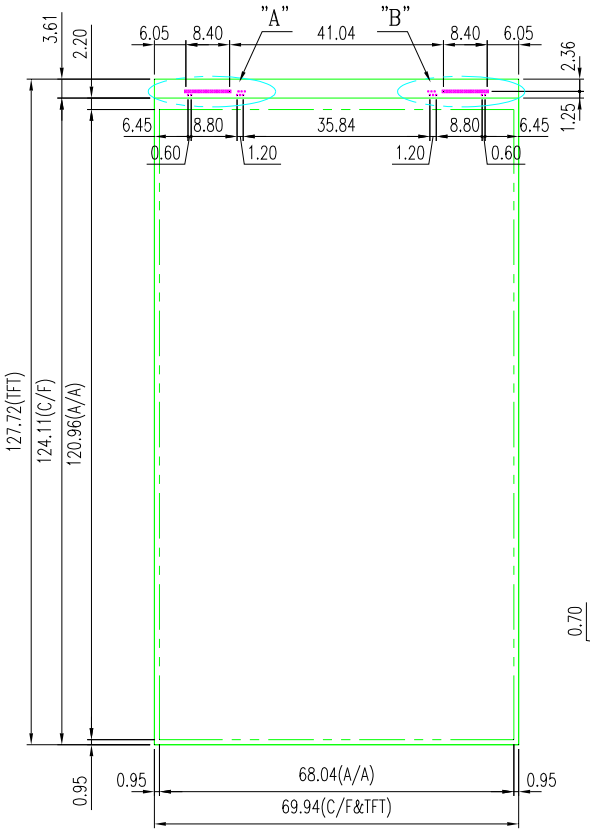

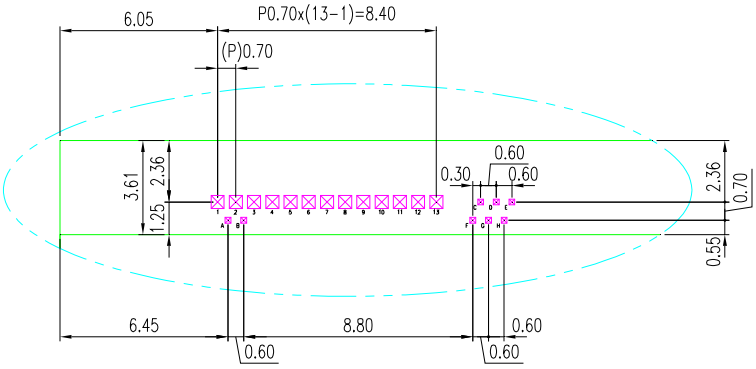

Detail of "A"
Scale = 5/1

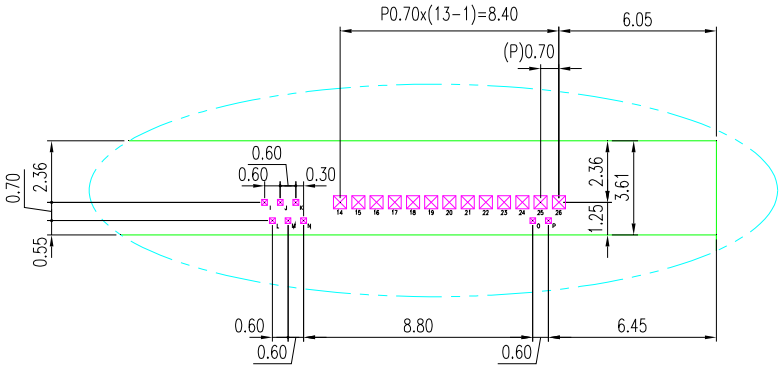

Detail of "B"
Scale = 5/1

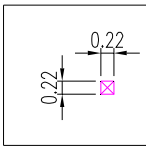

NO.	NAME	NO.	NAME
A	gout_d2u_l	I	vswt_r
B	gout_u2d_l	J	mux3
C	mux5	K	mux2
D	mux6	L	S1439
E	vswt_l	M	T576
F	mux4	N	mux1
G	T1	O	gout_u2d_r
H	S1	P	gout_d2u_r

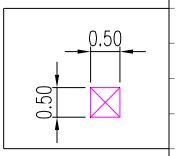

NO.	NAME	NO.	NAME
1	vcom_odd	14	gvst1_r
2	vcom_even	15	gclk1_r
3	data_b2	16	gclk3_r
4	data_g1	17	gclk5_r
5	data_r1	18	gclk7_r
6	d2u	19	vend1
7	vgl	20	vgh
8	vend2	21	u2d
9	gclk8_l	22	data_r1
10	gclk6_l	23	data_g1
11	gclk4_l	24	data_b1
12	gclk2_l	25	vcom_odd
13	gvst1_l	26	vcom_even

6. Reliability Test

Reliability test conditions (Polarizer characteristics null)

No.	Test Items	Test Condition	Notes
1	High Temperature Storage	T = 80| for 240hr	LGD FOG Ass'y (Without Contamination *2)
2	Low Temperature Storage	T = -30| for 240hr	
3	High Temperature Operating	T = 70| for 240hr	
4	Low Temperature Operating	T = -20| for 240hr *1)	
5	High Temp. and High Humidity Operating	T = 60| /90% for 240hr (But no condensation dew)	
6	Thermal Shock	-30| (30min) ~ 80| (30min), 24cycles Transfer time : 5minute	
7	Packing Shock	1coner, 3edge, 6face / 76cm Drop	Packing
8	Packing Vibration	Random 1.5Grms Z direction 1hr.	

Notes :

No.1~ No.5 : No guarantee for panel, only for FOG Ass'y with the above test conditions.

No.6~ No.7 : Refer to 9-1) Packing Ass'y on page 20.

*1) But no condensation of dew
*2) During module process, there should not be any contamination.

Result Evaluation Criteria

TFT- LCD Panel should be at room temperature for 2 hours when the display quality test is over. There should be no particular change which might affect the practical display function and the display quality test should be conducted under normal operating condition.

Product Specification

No.	Test Items	Test Condition	Notes
1	LCD 4 Point Bending	Spec: 90Mpa @10% failure probability	
2	Image sticking	At room temperature (@ 25|) Keep on the "Checker" pattern for 1hours Change into 127 gray pattern.	8 x 6 checker
3	Flicker	20% max. (@25|) (Center)	Fig. 6 (Page 11)
4	Cell corner push	Spec: 1.5kgf	

7. FPC Pin Assignment (R69007)

No.	Symbol	Description	No.	Symbol	Description
1~2	Dummy	GND	97	MOSI	MOSI
3~4	Dummy	NC	98	NSS	NSS
5~7	GVDDDR	GVDDDR	99	VREFD	NC
8~11	GVSSDR	GVSSDR	100	VREF	NC
12	RXBT3	NC	101	VREFC	NC
13	RXBT4	NC	102	TESTE	GND
14~19	RXGND	GND	103~105	GND	GND
20~22	RXVSP	VSP	106~109	VDD	VDD
23~25	RXGND	GND	110~111	D3N_B	D3P_A
26~28	RXVSP	VSP	112~113	D3P_B	D3N_A
29	VTEST2R	NC	114	DPHYGND	GND
30~32	VSN	VSN	115~116	D0N_B	D2P_A
33~35	RXGNDRF	GND	117~118	D0P_B	D2N_A
36~38	RXVSPRF	VSP	119	DPHYGND	GND
39~41	VDD	VDD	120~121	CLKN_B	CLKP_A
42~44	GND	GND	112~113	CLKP_B	CLKN_A
45~47	VCHG	VCHG	124	DPHYGND	GND
48	VTEST1R	NC	125~126	D1N_B	D1P_A
49~51	GVSSDR	GVSSDR	127~128	D1P_B	D1N_A
52~53	GVSS	GVSS	129	DPHYGND	GND
54~56	VGL	VGL	130~131	D2N_B	D0P_A
57~58	C31M	C31M	132~133	D2P_B	D0N_A
59~60	C31P	C31P	134~136	DPHYVCC	IOVCC
61~63	VSN	VSN	137~139	VDDLP	VDDLP
64~66	AGND	GND	140~143	DPHYGND	GND
67~69	VSP	VSP	144~145	D2P_A	D3P_B
70~72	GND	GND	146~147	D2N_A	D3N_B
73~75	IOVCC	IOVCC	148	DPHYGND	GND
76	GPIO2	NC	149~150	D1P_A	D2P_B
77	GPIO	DSV_ENM	151~152	D1N_A	D2N_B
78	PN2PTX	GND	153	DPHYGND	GND
79	PNSLV	IOVCC	154~155	CLKP_A	CLKP_B
80	PNMRX	IOVCC	156~157	CLKN_A	CLKN_B
81	TCP_RESX	MCU_RESX	158	DPHYGND	GND
82	LEDPWM	LEDPWM	159~160	D0P_A	D1P_B
83	TE	TE	161~162	D0N_A	D1N_B
84	TOUCH_EN	TOUCH_EN	163	DPHYGND	GND
85	WAKE_UP	WAKE_UP	164~165	D3P_A	D0P_B
86	RESCTL	GND	166~167	D3N_A	D0N_B
87	RESX	RESX	168~170	GND	GND
88	LNSW<1>	GND	171~173	VDD	VDD
89	LNS<0>	GND	174~182	IOVCC	IOVCC
90	PNSW	IOVCC	183~184	IOVCCRF	IOVCC
91	DBIST	GND	185~186	VGS	GND
92~95	MISO	MISO	187~188	GNDRF	GND
96	SCK	SCK	189~190	VSNRF	VSN

Product Specification

No.	Symbol	Description	No.	Symbol	Description
191~192	AGNDRF	GND	236	VTEST1L	NC
193~194	VSPRF	VSP	237~239	GND	GND
195~197	VSN	VSN	240~242	VDD	VDD
198~200	AGND	GND	243~244	RXVSPRF	VSP
201~203	VSP	VSP	245~246	RXGNDRF	GND
204~206	AVDDL	AVDDL	247~250	VSN	VSN
207~209	VCOM	VCOM	251	VTEST2L	NC
210~214	VCOM1	VCOM1	252~254	RXVSP	VSP
215~216	VCOM2	VCOM2	255~257	RXGND	GND
217~218	VCL	VCL	258~260	RXVSP	VSP
219~220	VSN	VSN	261~264	RXGND	GND
221~222	AGND	GND	265	RXBT2	NC
223~224	VSP	VSP	266	RXBT1	NC
225~226	C21M	C21M	267~269	GVSSDR	GVSSDR
227~228	C21P	C21P	270~272	GVDDDR	GVDDDR
229~230	VGH	VGH	273~276	DUMMY	NC
231~232	GVDD	GVDD	277~278	DUMMY	GND
233~235	GVDDDR	GVDDDR			

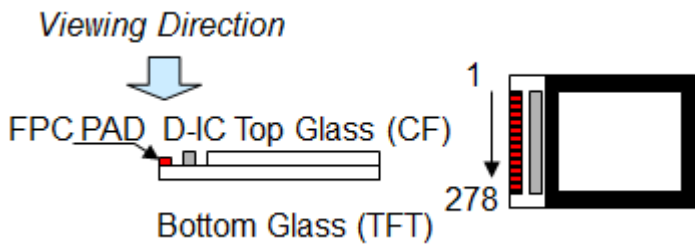

8. Recommended FPC Schematic

The following schematic is one of the recommendation for the optimized performance of this LCD.

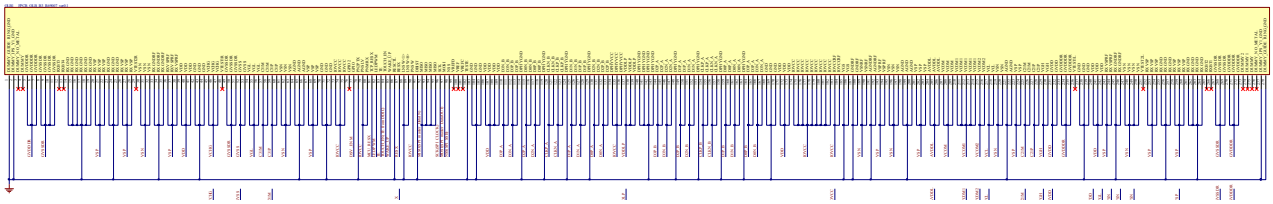

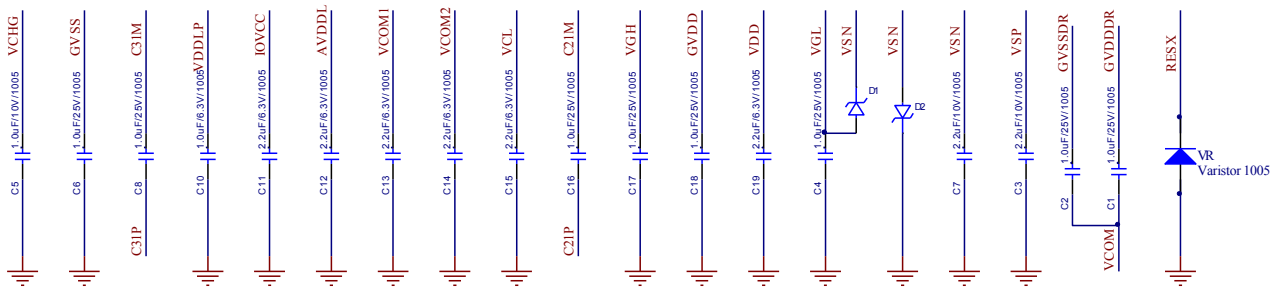

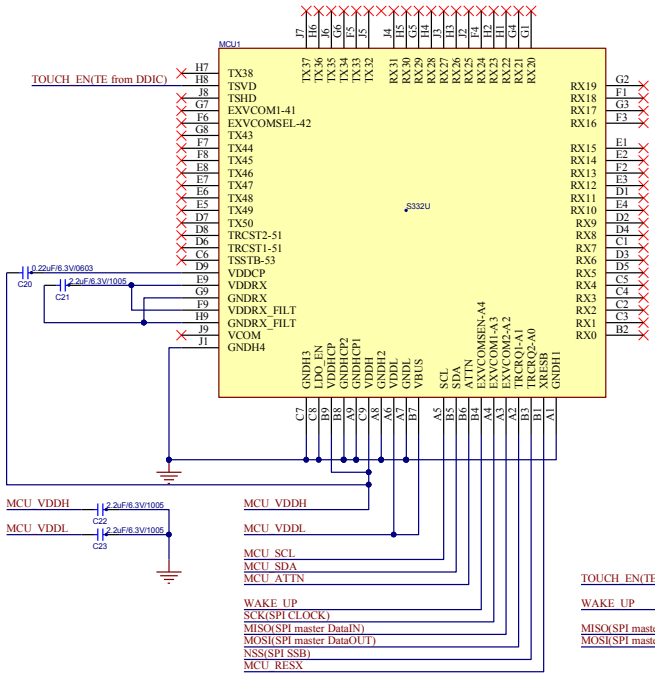

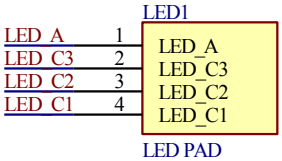

9. Packing Form

a) Package quantity in one box : 90 pcs

b) Box Size : 393mm X 339mm X 135mm

9-1) PACKING ASS'Y

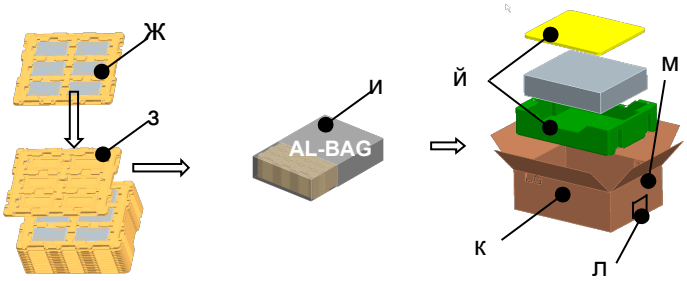

NO.	Description	Material
1	Cell	
2	Packing Tray	PET
3	Bag	AL
4	Packing	EPS
5	Carton Box	SW
6	Tape	OPP 70MMx300m
7	Label	YUPO Paper 100x70

9-2) PALLET ASS'Y

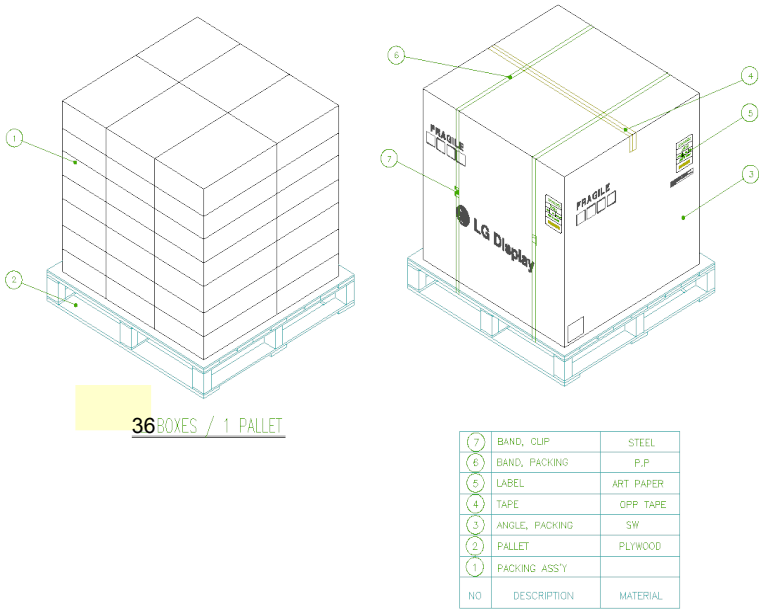

10. MIPI Register Values

10.1. Software flowchart

The following schematic is one of the recommendation for the optimized performance of this LCD.

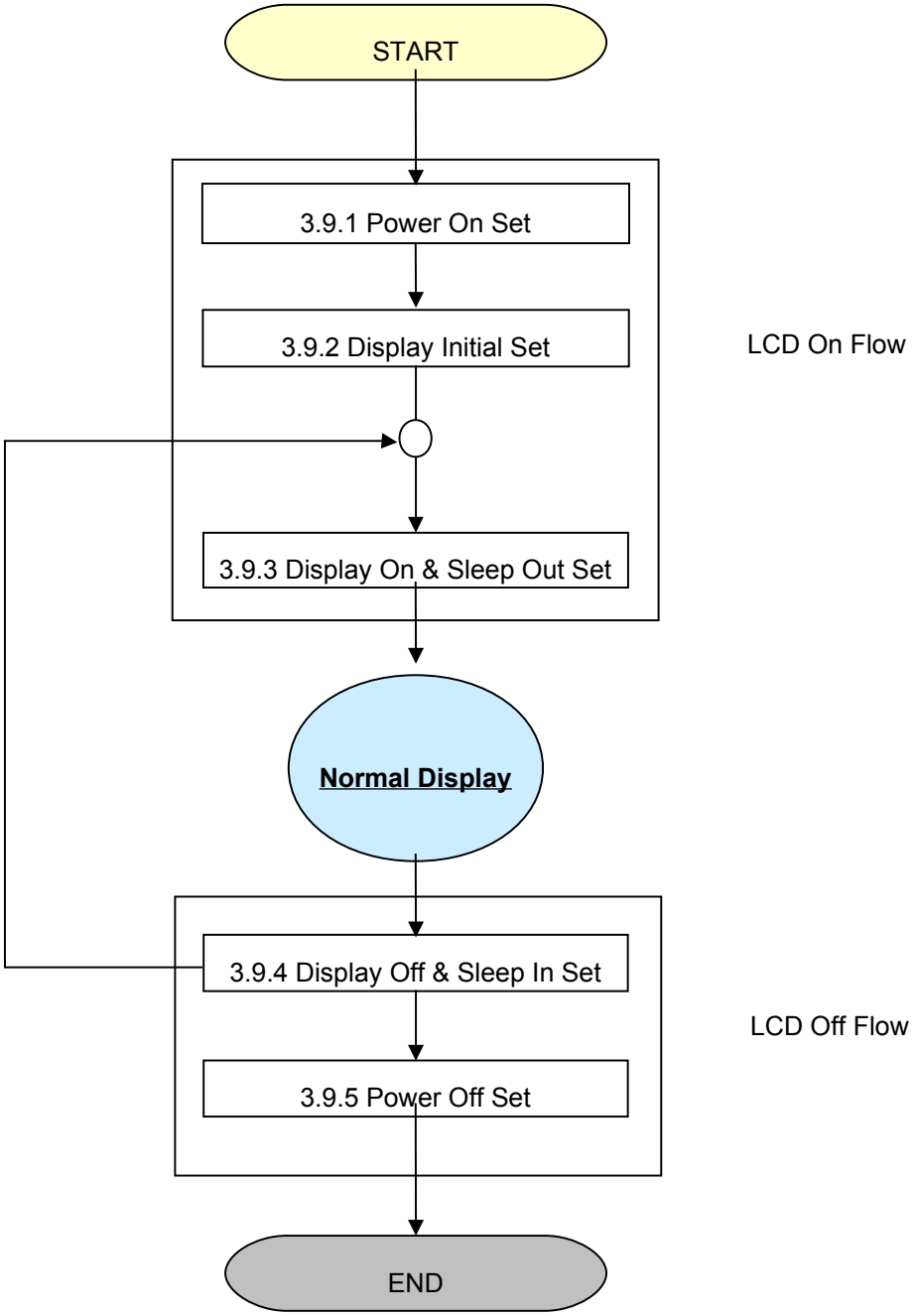

Product Specification

10.2 Power On Set

Step	REGISTER FUNCTION	INDEX/DATA	HEX
1	/RES = LOW		
2	Power (IOVCC, VSP, VSN) ON IOVCC ON		
3	10ms or more		
4	VSP ON		
5	10ms or more		
6	VSN ON		
7	10ms or more		
8	/RES = HIGH		
9	10ms or more		

Fig. 10-2.1. Power on/Off Timing

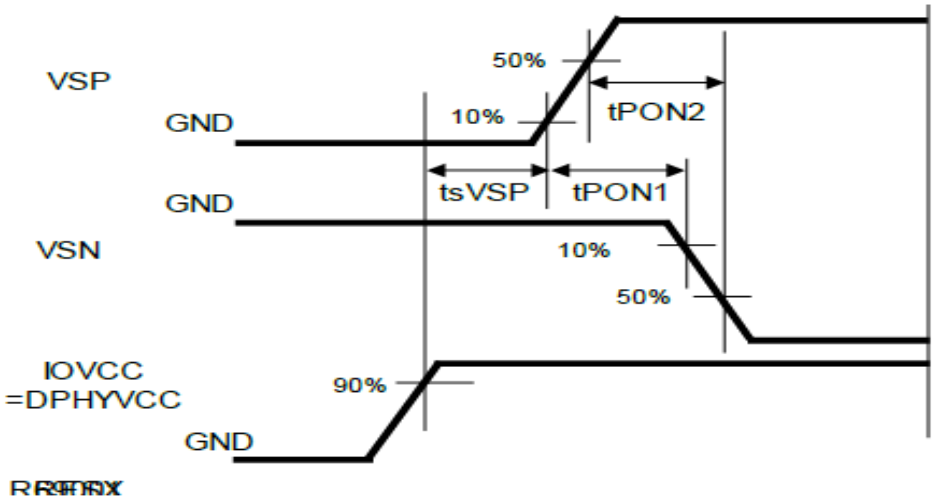

Item	Symbol	Unit	Test Condition	Min	Max
VSP-VSN delay time (10% to 10%)	tPON1	us	Power On	0	–
VSP-VSN delay time (50% to 50%)	tPON2	us	Power On	0	–
System power on to VSP ON time	tsVSP	ms	Power On	1	–

10.3 Display Initial Set

Data Type	REGISTER FUNCTION	Step	INDEX(HEX)	DATA(HEX)
0x23	Manufacturer Command Access Protect	1	0xB0	0x00
0x29	Number of Source Output and Pixel Format	2	0xB3	0x04 0x00 0x00
0x29	DSI Control	3	0xB6	0x3B 0xD3 0x00
0x29	#Display Setting1 (GSWAP Setting)	4	0xC1	0x80 0x08 0x11 0x1F 0xFC
				0xF2 0xC9 0x1F 0x5F 0x98
				0xB3 0xFE 0xFF 0xF7 0xFF
				0xFF 0xD7 0x31 0xF1 0xCB
				0x3F 0x3F 0xFD 0xEF 0x03
				0x24 0x69 0x18 0xAA 0x40
				0x01 0x42 0x02 0x08 0x00
				0x01 0x00 0x01 0x00
0x29	Display setting2	5	0xC2	0x01 0xFA 0x00 0x04 0x64
				0x08 0x00 0x60 0x00 0x38
				0x70 0x00 0x00 0x00
0x29	Display Setting 3 Active - V	6	0xC3	0x07 0x01 0x08 0x01 0x00
				0x00 0x00 0x00
0x29	Source Timing Setting & Sout Equalize Setting	7	0xC4	0x70 0x00 0x00 0x00 0x02
				0x00 0x00 0x00 0x00 0x02
				0x01 0x00 0x01 0x01 0x00
				0x00 0x00

10.3 Display Initial Set

Data Type	REGISTER FUNCTION	Step	INDEX(HEX)	DATA(HEX)
0x29	LTPS Timing Setting	8	0xC6	0x3C 0x00 0x3C 0x02 0x37
				0x01 0x0E 0x01 0x02 0x01
				0x02 0x03 0x0F 0x04 0x3C
				0x46
0x29	Gamma Setting Common Set	9	0xC7	0x00 0x16 0x22 0x2C 0x3B
				0x48 0x51 0x5D 0x40 0x47
				0x53 0x61 0x6A 0x71 0x78
				0x00 0x16 0x22 0x2C 0x3B
				0x48 0x51 0x5D 0x40 0x47
				0x53 0x61 0x6A 0x71 0x78
0x29	Digital Gamma Setting	10	0xC8	0x00 0x00 0x00 0x00 0x00
				0xFC 0x00 0x00 0x00 0x00
				0x00 0xFC 0x00 0x00 0x00
				0x00 0x00 0xFC 0x00
0x29	Digital Gamma Setting	11	0xC9	0x00 0x00 0x00 0x00 0x00
				0xFC 0x00 0x00 0x00 0x00
				0x00 0xFC 0x00 0x00 0x00
				0x00 0x00 0xFC 0x00
0x29	Panel PIN Control	12	0xCB	0xAA 0x1E 0xE3 0x55 0xF1
				0xFF 0x00 0x00 0x00 0x00
				0x00 0x00 0x00 0x00 0x00
				0x00 0x00 0x00 0x00

10.3 Display Initial Set

Data Type	REGISTER FUNCTION	Step	INDEX(HEX)	DATA(HEX)
0x29	Panel IF Control	13	0xCC	0x07
0x29	V Black Control	14	0xCD	0x3A 0x86 0x3A 0x86 0x8D
				0x8D 0x04 0x04 0x00 0x00
0x29	Power Setting	15	0xD0	0x2A 0x01 0x91 0x6A 0xDC
				0x59 0x19 0x00 0x00 0x00
				0x19 0x99 0x04 0x00 0x00
				0x00
0x29	Power Setting for Internal Power	16	0xD3	0x1B 0x3B 0xBB 0x77 0x77
				0x77 0xBB 0xB3 0x33 0x00
				0x80 0xA7 0xAF 0x5B 0x5B
				0x33 0x33 0x33 0xC0 0x00
				0xF2 0x0F 0x7D 0x7C 0xFF
				0x0F 0x99 0x00 0x33 0x00
				0xFF 0xFF
0x29	Driving Option and Touch Setting	17	0xD4	0x57 0x33 0x07 0x00 0xF4
0x29	Vcom Setting	18	0xD5	0x66 0x00 0x00 0x01 0x3D
				0x01 0x3D 0x00 0x38 0x00
				0x38

10.3 Display Initial Set

0x29	Sequencer Timing Control for Pon	19	0xD7	0x04 0xFF 0x23 0x15 0x75
				0xA4 0xC3 0x1F 0xC3 0x1F
				0xD9 0x07 0x1C 0x1F 0x30
				0x8E 0x87 0xC7 0xE3 0xF1
				0xCC 0xF0 0x1F 0xF0 0x0D
				0x70 0x00 0x2A 0x00 0x7E
				0x1D 0x07 0x00
0x29	Sequencer Test Control	20	0xD6	0x01

10.4 Sleep Out & Display On Set

Data Type	REGISTER FUNCTION	Step	INDEX(HEX)	DATA(HEX)
Host display data transfer start (HS)				
0x05	Display On	1	0x29	
0x05	Sleep Out	2	0x11	
73ms or more				

10.5 . Display Off & Sleep In Set

Data Type	REGISTER FUNCTION	Step	INDEX(HEX)	DATA(HEX)
0x29	Sequencer Timing Control for Pon	1	0xD7	0x04 0xFF 0x23 0x15 0x75
				0xA4 0xC3 0x1F 0xC3 0x1F
				0xD9 0x07 0x1C 0x1F 0x30
				0x8E 0x87 0xC7 0xE3 0xF1
				0xCC 0xF0 0x1F 0xF0 0x0D
				0x70 0x00 0x7A 0x00 0x7E
				0x1D 0x07 0x00
0x29	Power Setting for Internal Power	2	0xD3	0x1B 0x3B 0xBB 0x77 0x77
				0x77 0xBB 0xB3 0x33 0x00
				0x80 0xA7 0xAC 0x5B 0x5B
				0x33 0x33 0x33 0xC0 0x00
				0xF2 0x3F 0x7D 0x7C 0xFF
				0x0F 0x99 0x00 0x33 0x00
				0xFF 0xFF
0x05	Display Off	3	0x28	
0x05	Sleep In	4	0x10	
70ms or more				

Product Specification

10.6 Power Off Set

Step	REGISTER FUNCTION	INDEX/DATA	HEX
1	Host display data transfer stop (HS)		
2	VSN off		
3	10ms or more		
4	VSP Off		
5	10ms or more		
6	/RES = LOW , IOVCC Off		

Fig. 10-2.1. Power on/Off Timing

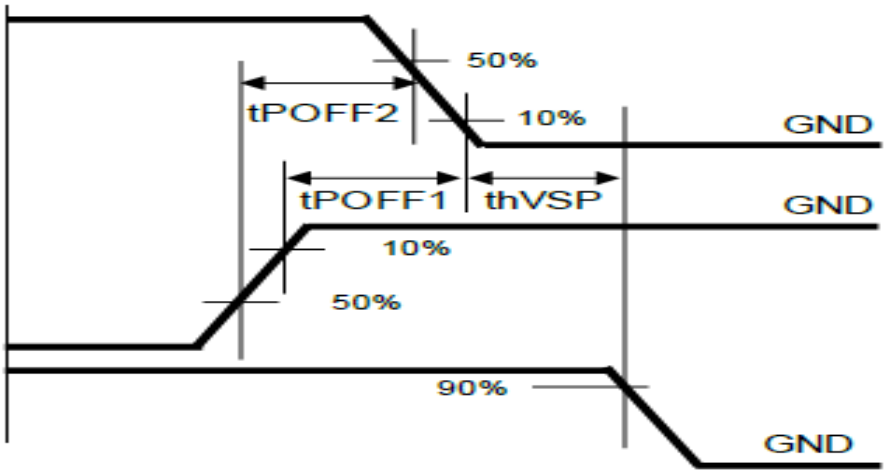

Item	Symbol	Unit	Test Condition	Min	Max
VSN-VSP delay time (10% to 10%)	tPOFF1	us	Power Off	0	–
VSN-VSP delay time (50% to 50%)	tPOFF2	us	Power Off	0	–
VSP OFF to system power off time	thVSP	us	Power Off	0	–

11. PRECAUTIONS

Please pay attention to the following when you use this TFT-LCD panel.

11-1. MOUNTING PRECAUTIONS

1) When the surface becomes dusty, please wipe gently with absorbent cotton or other soft materials.
2) Since a TFT-LCD Panel is composed of electronic circuits, it is not strong to electrostatic discharge. Make certain that treatment persons are connected to ground through wrist band etc .
3) Do not leave at the high temperature and high humidity in long time.
4) Do not leave the TFT-LCD panel from direct sunlight.
5) Do not contact with water to avoid Metal corrosion.
6) The TFT-LCD Panel shall be installed flat, without twisting or bending

11-2. OPERATING PRECAUTIONS

1) The spike noise causes the mis-operation of circuits. It should be lower than following voltage : V=±200mV(Over and under shoot voltage)
2) Response time depends on the temperature.(In lower temperature, it becomes longer.)
3) Brightness depends on the temperature. (In lower temperature, it becomes lower.) And in lower temperature, response time(required time that brightness is stable after turned on) becomes longer.
4) Be careful for condensation at sudden temperature change. Condensation makes damage to polarizer or electrical contacted parts. And after fading condensation, smear or spot will occur.
5) When fixed patterns are displayed for a long time, remnant image is likely to occur.
6) The TFT-LCD shall be operated within the temperature limits specified. when you operate the TFT-LCD panel at below(beyond) the limit specified,It may cause damage or image degradation. This phenomenon may not recover.

11-3. ELECTROSTATIC DISCHARGE CONTROL

Since a module is composed of electronic circuits, it is not strong to electrostatic discharge. Make certain that treatment persons are connected to ground through wrist band etc. And don’t touch interface pin directly.

11-4. PRECAUTIONS FOR STRONG LIGHT EXPOSURE

Strong light exposure causes degradation of color filter. It may not recover

11-5. STORAGE

When storing TFT-LCD panel as spares for a long time, the following precautions are necessary.

1) Store them in a dark place. Do not expose to sunlight or fluorescent light. Keep the temperature between 5°C and 35°C at normal humidity.
2) The TFT-LCD glass surface should not come in contact with any other object. It is recommended that they be stored in the container in which they were shipped.
3) Warranty period 6month which are only LCDs packed with AL bag package.
4) No warranty about corrosion after it's unpacked.
5) As TFT-LCD panels are packed in a vacuum with PE bag and Al bag in Nitrogen gas environment ,

Customer is required to keep the product under a good condition(25 degree, 50%) to prevent any of unwanted damage from the moisture, and chemicals, etc. And the LCD should be input to Module line as soon as it's unpacked to prevent panel corrosion because this gate material is consisted of Alnd/Mo which is weak in moisture, and chemicals, etc.

11-6. HANDLING PRECAUTIONS FOR TFT-LCD Glass

Be careful when TFT-LCD panel is broken.(TFT-LCD is made of glass)