Specification Approval Sheet

( ) Preliminary Specification

(●) Final Specification

Customer	
Model	IM220DBN2A
Supplier	LG INNOTEK CO., LTD

Approved by LGE		Proposed by LG Innotek	
APPROVED BY	SIGNATURE	APPROVED BY	SIGNATURE
		S.H.KIM	
DESIGNED BY	SIGNATURE	DESIGNED BY	SIGNATURE
		J.S.JEONG	

VER.0.7	4th April. 2007

Revision History

(A sheet refers to the sheet number after revision)

Date	Rev.	Sheet (New)	Item	Old	New	Reason
6/Nov/2006	0.0			-	-	Specification Release
7/Nov/2006	0.1	p.15-20	LCD Init.			Change LCD Init Sequence
1/Dec/2006	0.2	p.26	Drawing			Change Drawing (Add conductive Tape)
11/Dec/2006	0.3	p.15-20	Init. Seq.			Change LCD Init Sequence
12/Dec/2006	0.4	p.8	Luminance	Typ.400	Typ.450	Change Optical Spec'
18/Dec/2006	0.5	p.15,19	Init.	R29h : 0x000d	R29h : 0x000b	Change Init. Sequence
		-	-	-	LED FPCB Pattern 변경 (Tear Drop 포함) BLU White Tape 부착	Change BLU
27/Dec/2006	0.6	p.27	Packing			Change Box Size
4/Apr/2007	0.7	p.8	Optical Specification	-	LED Spec'	Added LED Spec'
		Appendix p.38	Partlist	TDK / MURATA / TAIYO YUDEN/	TDK / MURATA / TAIYO YUDEN/ KYOCERA	Added Cap. Maker (Kyocera)
				- SSC J5 F Rank (NPI)	SSC J5 F Rank (NPI) SSC J5 F Rank (KJP) LGIT Q3 F Rank (KJP)	Added BLU MAKER
		p34-39	APPENDIX	-	-	ADDED APPENDIX

— Table of Contents —

1. General Description

The **IM220DBN2A** model is a Color TFT LCD supplied by LG Innotek.
This Module has a 2.2 inch diagonally measured active display area with 240(RGB)X320 resolution
Each pixel is divided into Red, Green and Blue sub-pixels and dots which are arranged in vertical stripes.

LCD color is determined with 262Kcolors signal for each pixel.
The **IM220DBN2A** has been designed to apply the interface method that enables low power, high speed, and high contrast.
The **IM220DBN2A** is intended to support applications where thin thickness, wide viewing angle and low power are critical factors and graphic displays are important.

2. General Features

Item	Main Display	Remark
Display Mode	Normally Black, Transmissive LCD	
Driving Method	TFT Active Matrix	
Input Signals	16 / 16+2 / 8 / 6+6+6 Bit, CPU I/F Parallel	
Outside Dimensions	40.5mm(W) x 69.7mm(H) x 1.7mm(D) (Typ.)	
Active Area	33.84mm(W) X 45.12mm(H)	
Number of Pixels	240×RGB×320 Pixels	Note 1)
Pixel Pitch	0.141(H) X 0.141mm(W)	Note 1)
Pixel Arrangement	RGB Vertical stripes	Note 1)
LCD Driver IC	R61505U	

Note 1)

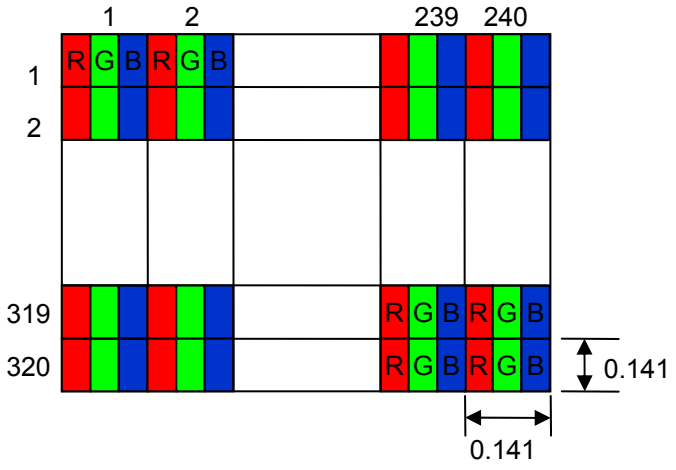

3. Absolute Maximum Ratings

The following are maximum values which, if exceeded, may cause operation or damage to the unit

ITEM	Symbol	Min.	Typ.	Max.	Unit	Remark
Supply Voltage 1	Vcc	-0.3	2.8	4.0	V	
Supply Voltage 2	Vddio	-0.3	2.8	4.0	V	
Driving Voltage	Vbat	2.8	3.7	5.0	V	
LED Forward Current	I_F	-	-	25	mA	Per piece of LED
LED Reverse Voltage	V_R	-	-	5	V	Per piece of LED
LED Permissible Loss	P_D	-	-	120	mW	Per piece of LED
Storage Humidity	Hstg	10	-	90	%RH	1), 2)
Storage Temperature	T_{STG}	-30	-	80	°C	1) ,2)
Operating Ambient Humidity	H_{OP}	10	-	90	°C	1) ,2)
Operating Ambient Temperature	T_{OP}	-20	-	70	%RH	1) ,2)

Note 1) Temp. ≤ 60℃ , 90% RH MAX.

Temp. ＞60℃ , Absolute humidity shall be less than 90% RH at 60℃

Note 2) The diagram below indicates the peripheral environment of the module.

The wet bulb temperature should be kept under 39 °C and there should be no compensation

If the LSI is used above these absolute maximum ratings, it may become permanently damaged.

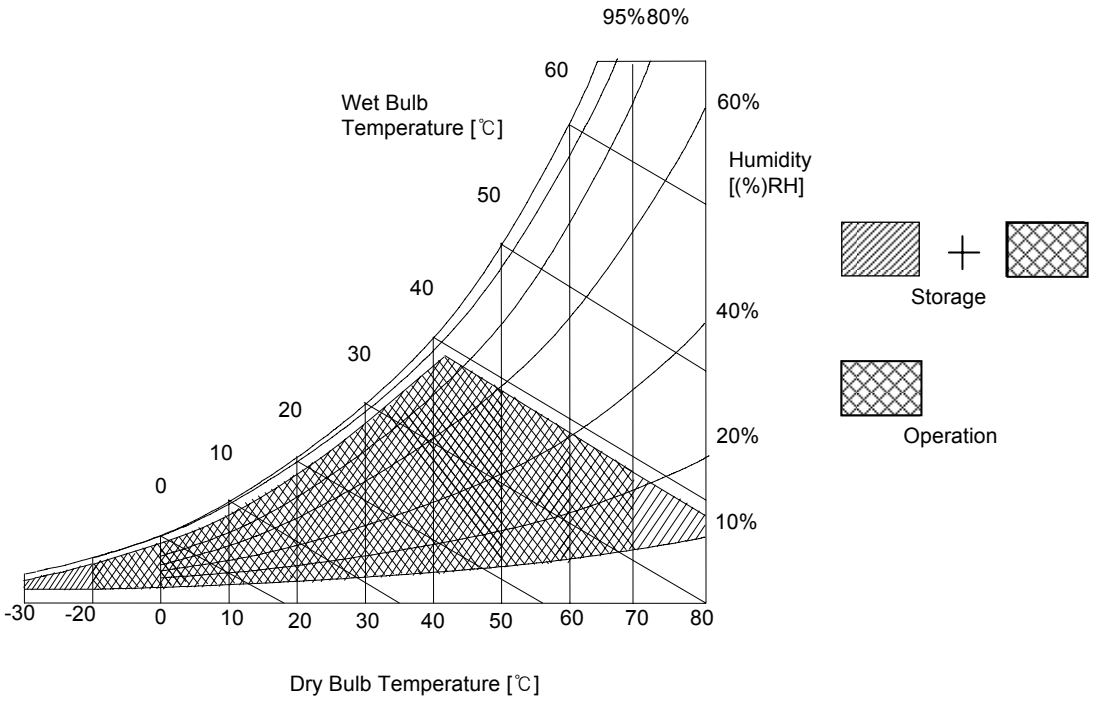

4. Electrical Specification 1)

4.1 Main Window Display (TFT LCD)

[Ta=25℃]

Properties		Sym.	Min	Typ.	Max	Unit	Note
Power Supply Battery Voltage		Vbat	3.2	3.7	4.2	V	1)
Supply Voltage 1		Vddio	1.6	2.8	3.6	V	1)
Supply Voltage 2		Vcc	2.7	2.8	2.9	V	1)
Logic Signal Input Voltage		VIdL	0.8Vdd	-	-	V	Logic Signal Input Voltage
		VIdH	-	-	0.2Vdd	V	
Current Consumption	Logic	Icc	-	10	13	mA	3)
	LED Driving	Ibat	-	100	-	mA	
	Standby Mode	ISTY	-	0.1	-	mA	3)

Note :

1) The recommended operating conditions refers to a range in which operation of this product is guaranteed. Should this range is exceeded, the operation cannot be guaranteed even if the values may be within the absolute maximum ratings.
Accordingly, please make sure that the module is used within this range.
And these current values are measured under the condition that all device are stopped, each component is stable and Logic signal is input.

2) All the unused input terminals have to be connected to Vdd or Vss. Please select appropriate one which meet the function required by unused terminal.

3) Power Consumption

(1) Display IC standstills while LCD is in the standby mode.
The standby mode means Vdd is supplied and then oscillator off .
And these values are not peak current but constant current.

(2) In standby mode, display operation is completely halted and Vdd is ON (Vbat is OFF)

(3) In standby mode, power consumption measurement is based on 2.8V logic voltage.

(4) Input Vcc voltage : 2.8V ± 0.1V
- Test Equipment : Oscilloscope TDS5104 (Maker : Tektronix)

(5) Measure the current after set up a current meter on Vcc Line.
- Test Equipment : Multi-tester 85Ⅲ (Maker : FLUKE)
- Display Tester : J600
- Resolving Power : 1/100 mA

(6) Measure Power consumption of the display pattern, the “Color-Bar”.

1. White
2. Yellow
3. Cyan
4. Green
5. Magenta
6. Red
7. Blue
8. Black

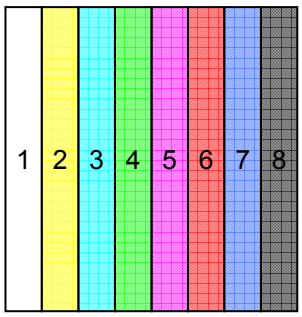

5. Optical Specification

Optical characteristics are determined after the unit has been 'ON' and stable for approximately 30 minutes in a dark environment at 25 °C. The values specified are at an approximate distance 500mm from the LCD surface at a viewing angle of Φ and θ equal to 0 °.

5.1 Main LCD (TFT)

Ta = 25℃ (Ambient temperature)

Spec	Parameter	Symbol	Condition	Values			Unit	Notes
				Min	Typ	Max		
With Backlight LED ON	Contrast Ratio	C/R	θ =0˚	300	400	-		Fig.1
	Luminance	BP	θ=0˚	350	450	-	cd/m²	Fig.2
	Luminance Uniformity	ΔL	θ =0˚	80	85	-	%	Fig.2
	Response Time	Tr+Tf	θ =0˚	-	35	40	ms	Fig.3
	Viewing Angle	Φ=180˚	CR>10	70	80	-	˚	Fig.4
		Φ=0˚		70	80	-	˚	
		Φ=90˚		70	80	-	˚	
		Φ=270˚		70	80	-	˚	
	CIE Color Coordinate 1931	Wx	θ =0˚	0.264	0.304	0.344		Fig.1
		Wy		0.295	0.335	0.375		
		Rx	θ =0˚	0.556	0.596	0.636		
		Ry		0.309	0.349	0.389		
		Gx	θ =0˚	0.289	0.329	0.369		
		Gy		0.547	0.587	0.627		
		Bx	θ =0˚	0.106	0.146	0.186		
		By		0.068	0.108	0.148		
CCT			θ =0˚	6300	-	8000	K	Fig.1
Color Gamut			θ =0˚	50	55	-	%	

* LED Products Name : KWTS907 (SSC, J5, F Rank) – NPI
LED Products Name : LEWWS47 (LGIT,Q3, F Rank) – KJP
LED Products Name : KWTS907 (SSC, J5, F Rank) – KJP
LED current value = 20mA (per chip)

◈ Measurement System

Notes :

1. Contrast Ratio(CR) is defined mathematically as :

$$\text{Contrast Ratio} = \frac{\text{Surface Luminance with all white pixels}}{\text{Surface Luminance with all black pixels}}$$

2. Surface luminance is the center point across the LCD surface 500mm from the surface with all pixels displaying white. For more information see FIG 1.

3. Response time is the time required for the display to transition from white to black (Rising Time, Tr) and from black to white (Falling Time, Tf). For additional information see FIG 3.

4. Viewing angle is the angle at which the contrast ratio is greater than 10. The angles are determined for the horizontal or x axis and the vertical or y axis with respect to the z axis which is normal to the LCD surface. For more information see FIG 4.

FIG. 1. Optical Characteristic Measurement Equipment and Method

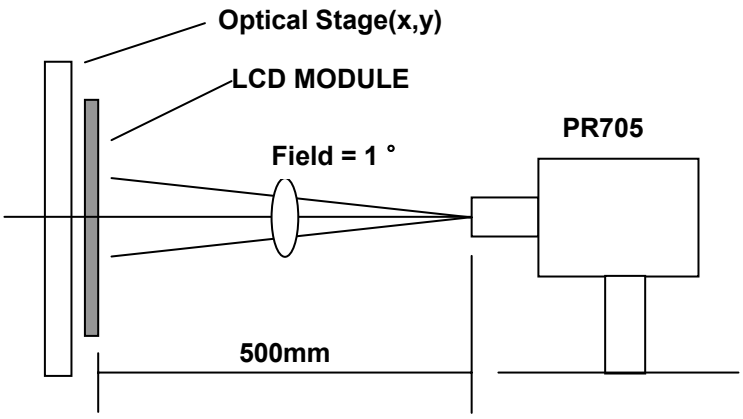

<Transmissive Mode>

- Measurement System (Test Procedure) With backlight turned on
- Measuring Instrument: PR705 made by PHOTO RESEARCH
- Measuring Field : 1°
- Environment: Inside a darkroom

FIG. 2. Measurement Points for Luminance

▶ Luminance Uniformity
Using FIG.1 Measurement System with the backlight turned on, the
luminance uniformity should be obtained from the next expression, when white raster (white : gradation level L63) is displayed: (* LED Current = 20mA)

Luminance Uniformity = Lmin / Lmax X100 (%)

, Lmin = Minimum luminance point
Lmax = Maximum luminance point

▶ Luminance
Use FIG.1(Test Procedure) under Measurement System with the backlight turned on to measure the luminance when white raster (white: Gradation level L63) is displayed.

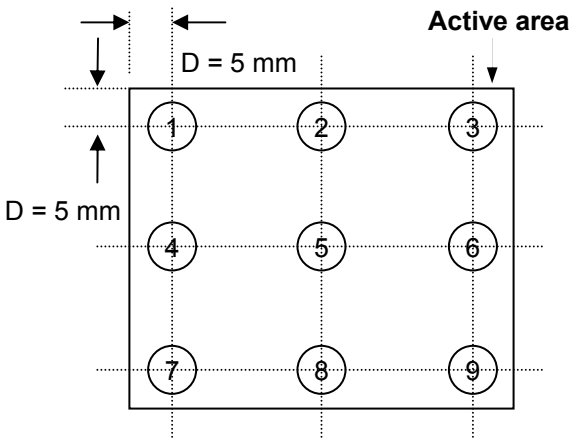

<Measuring point for luminance uniformity>

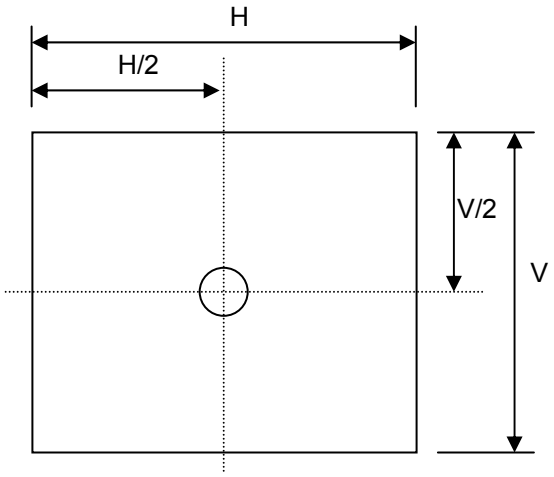

<Measuring point for luminance>

FIG. 3. The definition of Response Time

The response time is defined as the following figure and shall be measured by switching the input signal for “black” and “white”.

Response Time = Rising Time (Tr) + Falling Time (Tf)
, Rising Time(Tr) : Full White 90% → Full White 10% Transmittance.
Falling Time(Tf) : Full White 10% → Full White 90% Transmittance.

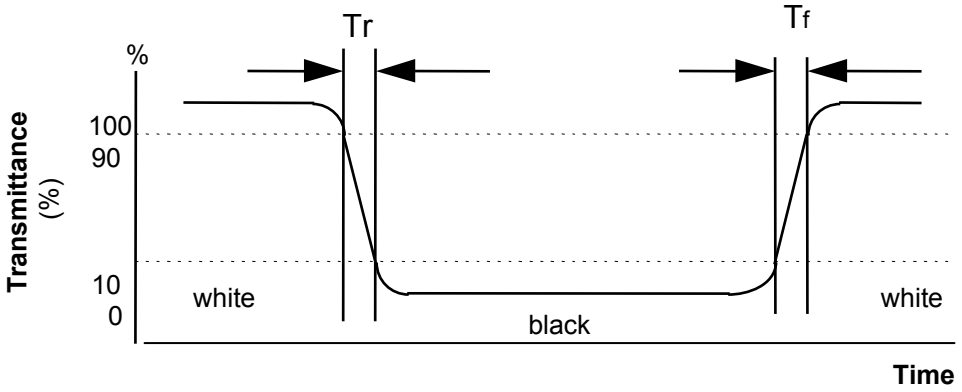

FIG. 4. The definition of Viewing Angle

Use Fig. 1(Test Procedure) under Measurement System to measure the contrast from the measuring direction specified by the conditions as the following figure.
The definition of viewing angle range is that the contrast ratio is higher than CR 10.(CR >10)

<dimension of viewing angle range>

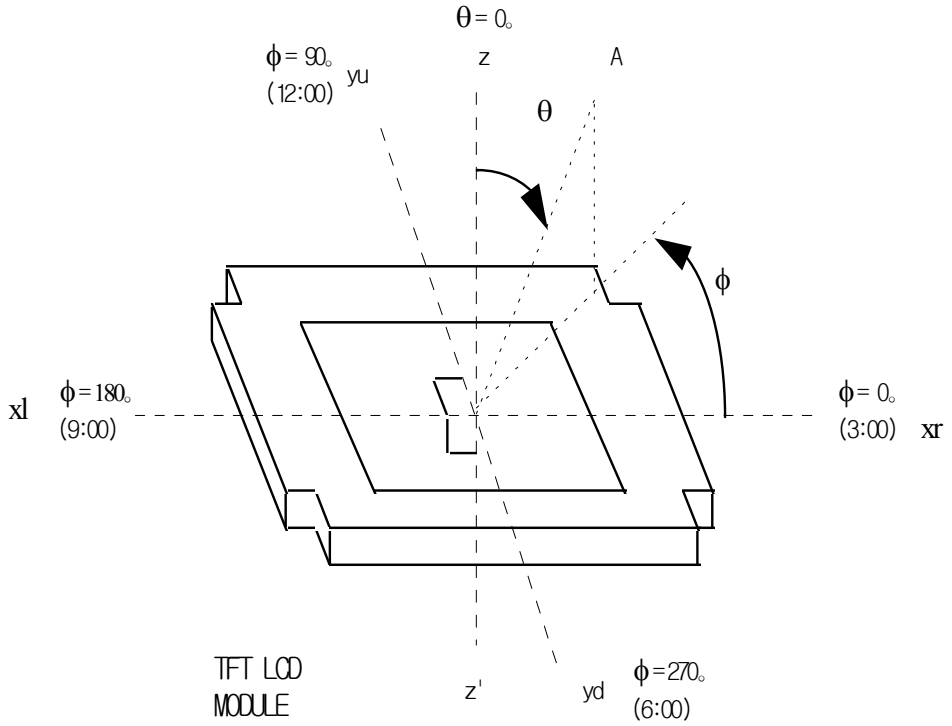

6. Block Diagram

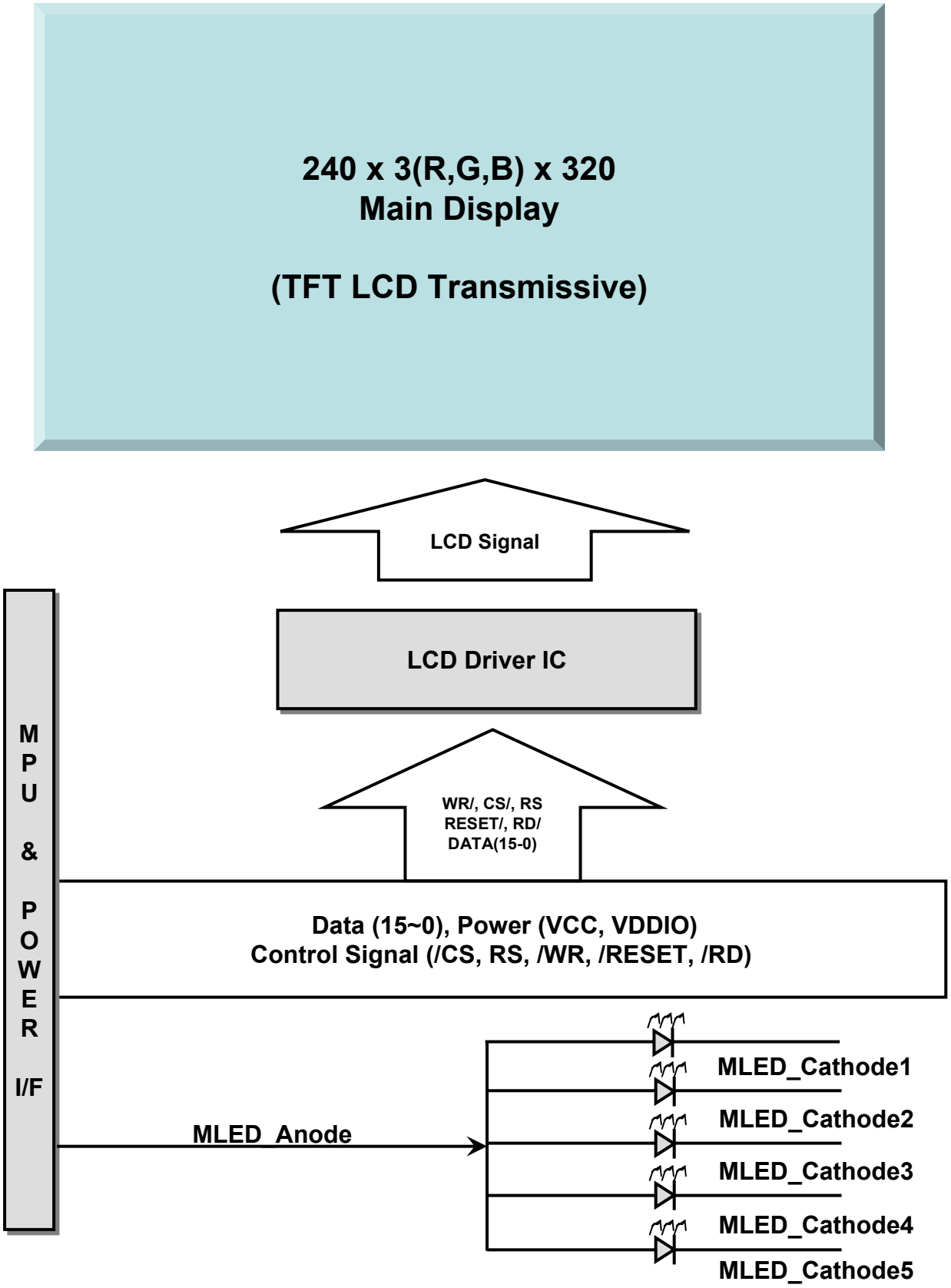

7. Pin Description

7.1. Input Signal and Power : Pin Description (Input Pin : 40Pin B-to-B Connector)

No.	Symbol	Description
1	VCC(2.8V)	Power Supply2
2	VDDIO(2.8V)	Power Supply1
3	GND	GND
4	MAKER_ID	MAKER_ID (Low)
5	D0	DATA BUS 0
6	D1	DATA BUS 1
7	D2	DATA BUS 2
8	D3	DATA BUS 3
9	D4	DATA BUS 4
10	D5	DATA BUS 5
11	D6	DATA BUS 6
12	D7	DATA BUS 7
13	D8	DATA BUS 8
14	D9	DATA BUS 9
15	D10	DATA BUS 10
16	D11	DATA BUS 11
17	D12	DATA BUS 12
18	D13	DATA BUS 13
19	D14	DATA BUS 14
20	D15	DATA BUS 15
21	GND	GND
22	/RESET	LCD RESET PIN
23	/WR	WRITE DATA
24	/RD	READ DATA
25	/CS	CHIP SELECT
26	RS	REGISTER SELECT
27	IFMODE	I/F MODE SETTING
28	GND	GND
29	VSYNC_OUT	VSYNC_OUT
30	MLED_CATHODE(5)	LED5 CATHODE CONNECTION
31	MLED_CATHODE(4)	LED4 CATHODE CONNECTION
32	MLED_CATHODE(3)	LED3 CATHODE CONNECTION
33	MLED_CATHODE(2)	LED2 CATHODE CONNECTION
34	MLED_CATHODE(1)	LED1 CATHODE CONNECTION
35	MLED_ANODE	LED COMMON ANODE CONNECTION

7.2. Relation Between Input Signal and Color

COLOR	DISPLAY	DATA SIGNAL																		GRAY SCALE LEVEL
		RED						GREEN						BLUE						
		R5	R4	R3	R2	R1	R0	G5	G4	G3	G2	G1	G0	B5	B4	B3	B2	B1	B0	
BASIC COLOR	BLACK	0	0	0	0	0	0	0	0	0	0	0	0	0	0	0	0	0	0	-
	BLUE	0	0	0	0	0	0	0	0	0	0	0	0	1	1	1	1	1	1	-
	GREEN	0	0	0	0	0	0	1	1	1	1	1	1	0	0	0	0	0	0	-
	CYAN	0	0	0	0	0	0	1	1	1	1	1	1	1	1	1	1	1	1	-
	RED	1	1	1	1	1	1	0	0	0	0	0	0	0	0	0	0	0	0	-
	MAGENTA	1	1	1	1	1	1	0	0	0	0	0	0	1	1	1	1	1	1	-
	YELLOW	1	1	1	1	1	1	1	1	1	1	1	1	0	0	0	0	0	0	-
	WHITE	1	1	1	1	1	1	1	1	1	1	1	1	1	1	1	1	1	1	-
GRAY SCALE OF RED	BLACK	0	0	0	0	0	0	0	0	0	0	0	0	0	0	0	0	0	0	R0
	DARK	0	0	0	0	0	1	0	0	0	0	0	0	0	0	0	0	0	0	R1
	.	0	0	0	0	1	0	0	0	0	0	0	0	0	0	0	0	0	0	R2
	.	:	:	:	:	:	:	:	:	:	:	:	:	:	:	:	:	:	:	R3~R60
	.	:	:	:	:	:	:	:	:	:	:	:	:	:	:	:	:	:	:	
	LIGHT	1	1	1	1	0	1	0	0	0	0	0	0	0	0	0	0	0	0	R61
		1	1	1	1	1	0	0	0	0	0	0	0	0	0	0	0	0	0	R62
	RED	1	1	1	1	1	1	0	0	0	0	0	0	0	0	0	0	0	0	R63
GRAY SCALE OF GREEN	BLACK	0	0	0	0	0	0	0	0	0	0	0	0	0	0	0	0	0	0	G0
	DARK	0	0	0	0	0	0	0	0	0	0	0	1	0	0	0	0	0	0	G1
	.	0	0	0	0	0	0	0	0	0	0	1	0	0	0	0	0	0	0	G2
	.	:	:	:	:	:	:	:	:	:	:	:	:	:	:	:	:	:	:	G3~G60
	.	:	:	:	:	:	:	:	:	:	:	:	:	:	:	:	:	:	:	
	LIGHT	0	0	0	0	0	0	1	1	1	1	0	1	0	0	0	0	0	0	G61
		0	0	0	0	0	0	1	1	1	1	1	0	0	0	0	0	0	0	G62
	GREEN	0	0	0	0	0	0	1	1	1	1	1	1	0	0	0	0	0	0	G63
GRAY SCALE OF BLUE	BLACK	0	0	0	0	0	0	0	0	0	0	0	0	0	0	0	0	0	0	B0
	DARK	0	0	0	0	0	0	0	0	0	0	0	0	0	0	0	0	0	1	B1
	.	0	0	0	0	0	0	0	0	0	0	0	0	0	0	0	0	1	0	B2
	.	:	:	:	:	:	:	:	:	:	:	:	:	:	:	:	:	:	:	B3~B60
	.	:	:	:	:	:	:	:	:	:	:	:	:	:	:	:	:	:	:	
	LIGHT	0	0	0	0	0	0	0	0	0	0	0	0	1	1	1	1	0	1	B61
		0	0	0	0	0	0	0	0	0	0	0	0	1	1	1	1	1	0	B62
	BLUE	0	0	0	0	0	0	0	0	0	0	0	0	1	1	1	1	1	1	B63

Note) Gray definition

Rn : RED Gray, Gn : GREEN Gray, Bn : BLUE Gray (n = Gray Level)

Input Signal : 0 = Low level voltage, 1 = High level voltage

8. LCD Initializing Sequence

8.1. LCD Initial Setting

Register Function	RS	Index/Data	Hex
Initial Condition (DB0-15, RS, /CS,/ WR,/ RD ="High', RESET = "Low")			
VCI, IOVCC Power ON			
Hardware reset release (/RESET "Low" → "High")			
I/F Mode Setting (IF_MODE = "Low" : 16bit, "High" : 8 bit)			
Wait min. 0.01ms			
Display Control 1	L	Index	0x0007
	H	Data	0x0000
Power Control 3	L	Index	0x0012
	H	Data	0x0000
Wait min. 2ms			
Transfer Synchronization	L	Index	0x0000
	L	Index	0x0000
	L	Index	0x0000
	L	Index	0x0000
Wait 1ms			
Calibration Control	L	Index	0x00A4
	H	Data	0x0001
Driver Output Control	L	Index	0x0060
	H	Data	0x2700
Display Control 2	L	Index	0x0008
	H	Data	0x0503
GAMMA SETTING (Page.3)			
Display Control 1	L	Index	0x0007
	H	Data	0x0001
Power Control 5	L	Index	0x0017
	H	Data	0x0001
Power Control 1	L	Index	0x0010
	H	Data	0x10B0
Power Control 2	L	Index	0x0011
	H	Data	0x0117
Power Control 3	L	Index	0x0012
	H	Data	0x011A
Power Control 4	L	Index	0x0013
	H	Data	0x0A00
VCOM High Voltage	L	Index	0x0029
	H	Data	0x000b
Power Control 3	L	Index	0x0012
	H	Data	0x013A
USER DISPLAY MODE SETTING (Page.4)			
RAM Address Set (Horizontal)	L	Index	0x0020
	H	Data	0x0000
RAM Address Set (Vertical)	L	Index	0x0021
	H	Data	0x0000
Write to GRAM	L	Index	0x0022
	H	Image Data	-
DISPLAY ON SEQUENCE (Page.5)			

8.2. Gamma Setting

Register Function	RS	Index/Data	Hex
Gamma Control 1	L	Index	0x0030
	H	Data	0x0700
Gamma Control 2	L	Index	0x0031
	H	Data	0x0200
Gamma Control 3	L	Index	0x0032
	H	Data	0x0202
Gamma Control 4	L	Index	0x0033
	H	Data	0x0003
Gamma Control 5	L	Index	0x0034
	H	Data	0x0303
Gamma Control 6	L	Index	0x0035
	H	Data	0x0707
Gamma Control 7	L	Index	0x0036
	H	Data	0x1F1F
Gamma Control 8	L	Index	0x0037
	H	Data	0x0506
Gamma Control 9	L	Index	0x0038
	H	Data	0x0202
Gamma Control 10	L	Index	0x0039
	H	Data	0x0202
Gamma Control 11	L	Index	0x003A
	H	Data	0x0103
Gamma Control 12	L	Index	0x003B
	H	Data	0x0303
Gamma Control 13	L	Index	0x003C
	H	Data	0x0703
Gamma Control 14	L	Index	0x003D
	H	Data	0x1F1F

8.3. User Display Mode Setting

Register Function	RS	Index/Data	Hex
Driver Output Control	L	Index	0x0001
	H	Data	0x0500
LCD Driver Waveform Control	L	Index	0x0002
	H	Data	0x0700
Entry Mode	L	Index	0x0003
	H	Data	0x1030
Resize Control	L	Index	0x0004
	H	Data	0x0000
Display Control 3	L	Index	0x0009
	H	Data	0x0001
Display Control 4	L	Index	0x000A
	H	Data	0x0008
Horizontal Start Address	L	Index	0x0050
	H	Data	0x0000
Horizontal End Address	L	Index	0x0051
	H	Data	0x00EF
Vertical Start Address	L	Index	0x0052
	H	Data	0x0000
Vertical End Address	L	Index	0x0053
	H	Data	0x013F
Base Image Display Control	L	Index	0x0061
	H	Data	0x0000
Panel Interface Control 1	L	Index	0x0090
	H	Data	0x0019
Panel Interface Control 2	L	Index	0x0092
	H	Data	0x0100
Panel Interface Control 3	L	Index	0x0093
	H	Data	0x0002

8.4. Display ON SEQUENCE

Register Function	RS	Index/Data	Hex
Display Control 1	L	Index	0x0007
	H	Data	0x0021
Wait min. 1ms			
Display Control 1	L	Index	0x0007
	H	Data	0x0061
Wait min. 30ms			
Display Control 1	L	Index	0x0007
	H	Data	0x0173

8.5. Display OFF SEQUENCE

Register Function	RS	Index/Data	Hex
Horizontal Start Address	L	Index	0x0007
	H	Data	0x0072
Wait min. 30ms			
Display Control 1	L	Index	0x0007
	H	Data	0x0001
Wait min. 1ms			
Display Control 1	L	Index	0x0007
	H	Data	0x0000

8.6. POWER OFF SEQUENCE

Register Function	RS	Index/Data	Hex
Power Control 1	L	Index	0x0010
	H	Data	0x00A0
Power Control 2	L	Index	0x0011
	H	Data	0x0067
Power Control 3	L	Index	0x0012
	H	Data	0x0128
Power Control 1	L	Index	0x0010
	H	Data	0x0020
VCI → IOVCC Power OFF			

8.7. SLEEP MODE ON SEQUENCE

Register Function	RS	Index/Data	Hex
Display Control 1	L	Index	0x0007
	H	Data	0x0072
Wait min. 40ms			
Display Control 1	L	Index	0x0007
	H	Data	0x0001
Wait min. 1ms			
Display Control 1	L	Index	0x0007
	H	Data	0x0000
Power Control 1	L	Index	0x0010
	H	Data	0x0080
Power Control 2	L	Index	0x0011
	H	Data	0x0167
Power Control 3	L	Index	0x0012
	H	Data	0x010A
Wait min. 16 ms			
Power Control 1	L	Index	0x0010
	H	Data	0x0000
Power Control 1	L	Index	0x0010
	H	Data	0x0002

8. 8. WAKE UP SEQUENCE (SLEEP → NORMAL DISPLAY)

Register Function	RS	Index/Data	Hex
Power Control 1	L	Index	0x0010
	H	Data	0x0000
Wait min. 1 ms			
Display Control 1	L	Index	0x0007
	H	Data	0x0001
Power Control 5	L	Index	0x0017
	H	Data	0x0001
Power Control 1	L	Index	0x0010
	H	Data	0x10B0
Power Control 2	L	Index	0x0011
	H	Data	0x0117
Power Control 3	L	Index	0x0012
	H	Data	0x011A
Power Control 4	L	Index	0x0013
	H	Data	0x0A00
VCOM High Voltage	L	Index	0x0029
	H	Data	0x000b
Power Control 3	L	Index	0x0012
	H	Data	0x013A
Wait min. 1 ms			
DISPLAY ON SEQUENCE (Note*)			

8.9. DEEP STNADBY MODE ON SEQUENCE

Register Function	RS	Index/Data	Hex
Display Control 1	L	Index	0x0007
	H	Data	0x0072
Wait min. 1ms			
Display Control 1	L	Index	0x0007
	H	Data	0x0001
Wait min. 30ms			
Display Control 1	L	Index	0x0007
	H	Data	0x0000
Power Control 1	L	Index	0x0010
	H	Data	0x10B4

1. Only LCD Initial Sequence have to be transferred when LCD Display start.
2. In sleep mode, the internal display operation except RC oscillation is halted to reduce power consumption. No change to the GRAM data and instruction setting is accepted and the GRAM data and the instruction setting are maintained in sleep mode.
3. In deep standby mode, the internal logic power supply is turned off to reduce power consumption. The GRAM data and instruction setting are not maintained when the LCM enters the deep standby mode, and they must be reset after exiting deep standby mode.
4. The LCM, supports data transfer synchronization function to reset the counters for upper and lower 8-bit / 16+2 bus transfer mode. When a mismatch occurs in upper and lower data transfers due to noise and so on, the 00H instruction is written four times consecutively to reset the upper and lower counters in order to restart the data transfer from upper 8 bits. The data transfer synchronization, hen executed periodically, can help the display system recover from runaway. Make sure to execute data transfer synchronization after reset operation before transferring instruction.

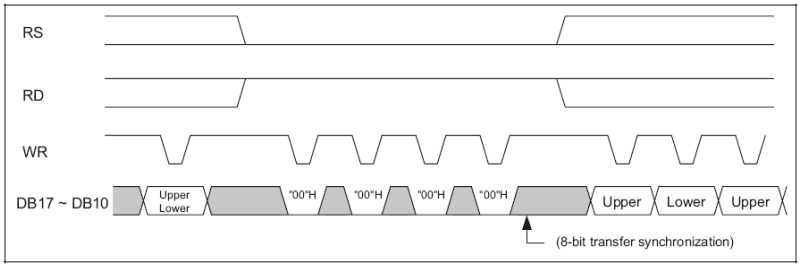

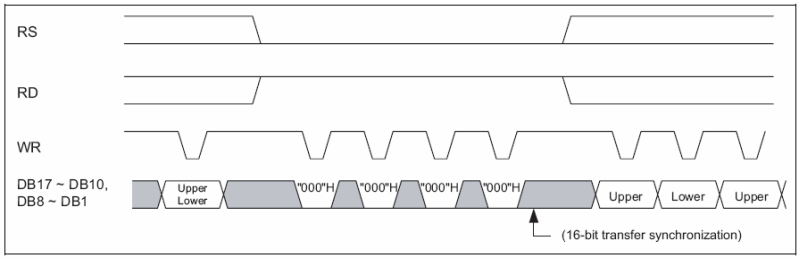

9. Timing Characteristics

9.1 Timing Diagram of 80-system Bus Interface Operation

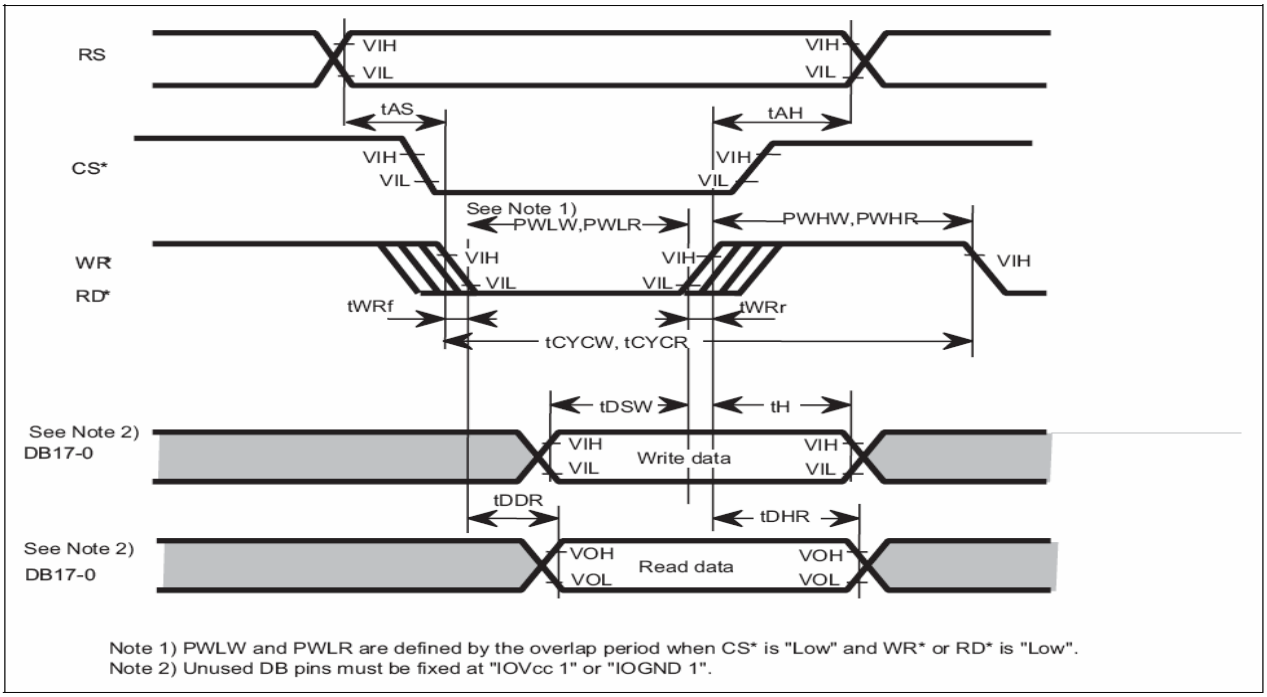

9.2. Timing Characteristics

Parameter		Unit	Symbol	16 Bit Interface		
				Min	Typ.	Max
Bus cycle time Write	Write	ns	t_{CYCW}	125	-	-
Address setup time	Read	ns	t_{CYCR}	450	-	-
Write low-level pulse width		ns	PW_{LW}	45	-	-
Read low-level pulse width		ns	PW_{LR}	170	-	-
Write high-level pulse width		ns	PW_{HW}	70	-	-
Read high-level pulse width		ns	PW_{HR}	250	-	-
Write/Read rise / fall time		ns	tWRr, WRf	-	-	25
Setup time	Write	ns	t_{AS}	0	-	-
	Read	ns		10	-	-
Address hold time		ns	t_{AH}	2	-	-
Write data setup time		ns	t_{DSW}	25	-	-
Write data hold time		ns	t_H	10	-	-
Read data delay time		ns	t_{DDR}	-	-	150
Read data hold time		ns	t_{DHR}	5	-	-

9.3. RESET Operation

(VCC = 2.8V, Ta=25℃)

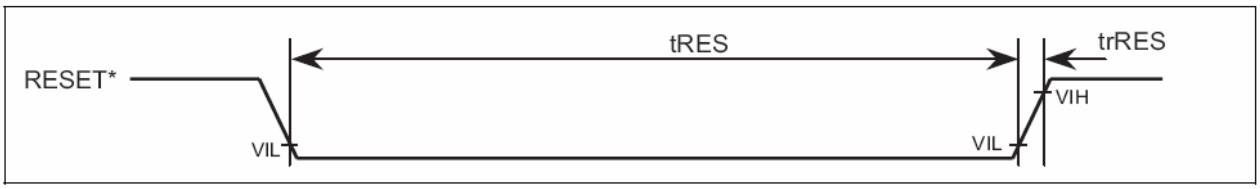

Parameter	Symbol	Unit	Min	Typ.	Max	Note
Reset low-level width	T_{res}	us	1	-	-	
Reset rise time	t_{rRES}	us	-	-	10	

10. Reliability and Inspection Standard

10.1 Reliability Testing Condition

No	Test Item	Test Conditions	Remark
1	High Temperature Operation	70℃ , 96 Hr	
2	Low Temperature Operation	-20℃, 96 Hr	
3	High Temperature and High Humidity Operation	60℃, 90% RH, 96 Hr	
4	High Temperature and High Humidity Storage	60℃, 90% RH, 96 Hr	
5	Low Temperature Storage	-30℃, 96 Hr	
6	Thermal Shock	-30℃, 80℃(30Min) 20clcye	
7	Temperature Humidity Cycle	-30℃ → 25℃/65% → 60℃/90% 5 cycle	4Hr
8	Vibration Test	10~55Hz, x/y/z 방향, 각 40분(Total 2시간) (10~22Hz/5s → 22Hz/15s → 22~48Hz/5s → 48Hz/15s→ 48~55Hz/5s→ 55Hz/15s) 10 ~ 55 ~ 10 → 1Cycle	2Hr
9	Drop Test	76cm / 8Corners / 6Faces, 1cycle	Packaged in a box
10	Electrostatic Withstanding Voltage	Air : 0Ohm 200pF ± 200V	
		Contact : 0Ohm 200pF ± 200V	

10.2 Fault Judgment Criteria

After Completing the reliability tests, leave the samples under the room temperature (25℃,40%RH) for 2 hours and check for the following inspection items.

(1) No clearly visible defects or deterioration of display quality allowed.
(2) Contrast ratio should be at least 50% of initial value.
(3) No function-related abnormalities.
(4) Current consumption must not exceed 2 times of initial value.
(5) R, G and B color area must be at least 70% of initial value.

10.3 Inspection Standard

10.3.1 Inspection Standard for Main LCD

No	Item	Criterion for Defects	Defect type
1	Non Lighting	Nothing	Major
2	Irregular Operation	Nothing	Major
3	Short	Nothing	Major
4	Open	Nothing	Major

<table>
<tr><th>No</th><th>Item</th><th>Criterion for Defects</th><th>Defect type</th></tr>
<tr><td>5</td><td>Dot Defect</td><td>
<table>
<tr><th>Item</th><th>Bright Dot</th><th>Dark Dot</th></tr>
<tr><td>Acceptable No.</td><td>0</td><td>(Note1)</td></tr>
</table>
Note 1) Case of Dot defect is below
① Bright Dot (whit spot) : “0”
② Dark Dot (black spot) : “0” (In case of Dark Dot on Main TFT LCD)
- NG if there’s full Dot defect.
- Damaged less than half size of sub-pixel is not counted as defect
- Dots darker than half size of sub-pixel are not defined as bright dot defect
</td><td>Minor</td></tr>
<tr><td>6</td><td>Black/White Spot</td><td>
<table>
<tr><th></th><th>Size Φ (mm)</th><th>Acceptable number</th></tr>
<tr><td>Circle</td><td>Φ ≤ 0.10
0.10 < Φ ≤ 0.20</td><td>Ignore (note1)
1</td></tr>
</table>
</td><td></td></tr>
<tr><td>7</td><td>Black/White Line</td><td>
<table>
<tr><th>Length (mm)</th><th>Width (mm)</th><th>Acceptable number</th></tr>
<tr><td>Linear
L≤2.0</td><td>W ≤0.03
0.03 < W ≤0.05</td><td>Ignore(note 2)
1</td></tr>
</table>
</td><td>Minor</td></tr>
<tr><td>8</td><td>Back Light</td><td>
① No light is rejectable
② Flickering and abnormal lighting are rejectable

※ In case of the model with back light
(E/L, LED)
</td><td>Major</td></tr>
<tr><td>9</td><td>Display Pattern</td><td>
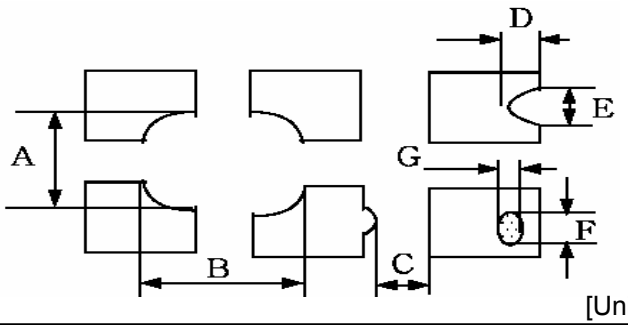

[Unit : mm]
<table>
<tr><td>A+B / 2 ≤ 0.30</td><td>0 < C</td><td>D+E / 2 ≤ 0.25</td><td>F+G / 2 ≤ 0.25</td></tr>
</table>
Note : 1) Acceptable up to 3 damages
2) NG if there’re two or more pinholes per dot
</td><td>Minor</td></tr>
<tr><td>10</td><td>Blemish & Foreign matters Size : Φ=(A+B)/2</td><td>
<table>
<tr><th>Size Φ (mm)</th><th>Acceptable number</th></tr>
<tr><td>Φ ≤ 0.10
0.10 < Φ ≤ 0.20
0.20 < Φ</td><td>Ignore
1
0</td></tr>
</table>
</td><td>Minor</td></tr>
</table>

No	Test Item	Criterion for Defects	Remark
11	Scratch on Polarizer 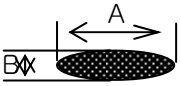	Width (mm) / Length (mm) / Acceptable number W ≤ 0.03 / Ignore / Ignore 0.03 < W ≤ 0.05 / L ≤ 2.0 / 1 0.05 < W / L>2.0 / 0	Minor
12	Bubble in Polarizer	Size Φ (mm) / Acceptable number Φ ≤ 0.20 / Ignore 0.20 < Φ ≤ 0.50 / 3 0.50 < Φ ≤ 0.80 / 2 0.80 < Φ / 0	Minor
13	Stains on LCD Panel Surface	Stains which cannot be removed even when wiped lightly with a soft cloth or similar cleaning too are rejectable.	Minor
14	Rust in Bezel	Rust which is visible in the bezel is rejectable.	Minor
15	Defect of land surface Contact	Evident crevices which is visible are rejectable.	Minor
16	Parts Mounting	① Failure to mount parts ② Parts not in the specifications are mounted ③ Polarity, for example, is reversed	Major Major Major
17	Parts Alignment	① LSI, IC Lead width is more than 50% beyond pad outline. ② Chip component is off center and more tan 50% of the leads is off the pad outline.	Minor Minor
18	Conductive Foreign matter	① On open space(GND, manual solder) solder ball is allowed up to Φ0.1mm(1EA). ② In case of shield space is allowed up to Φ0.2mm(1EA)	Major
19	Faculty PWB correction	① Due to PWB copper foil pattern burnout, the pattern is connected, using a jumper wire for repair ; 2 or more places are corrected per PWB ② Short circuited part is cut, and no resist coating has been performed.	Minor Minor

11. Outline Dimension

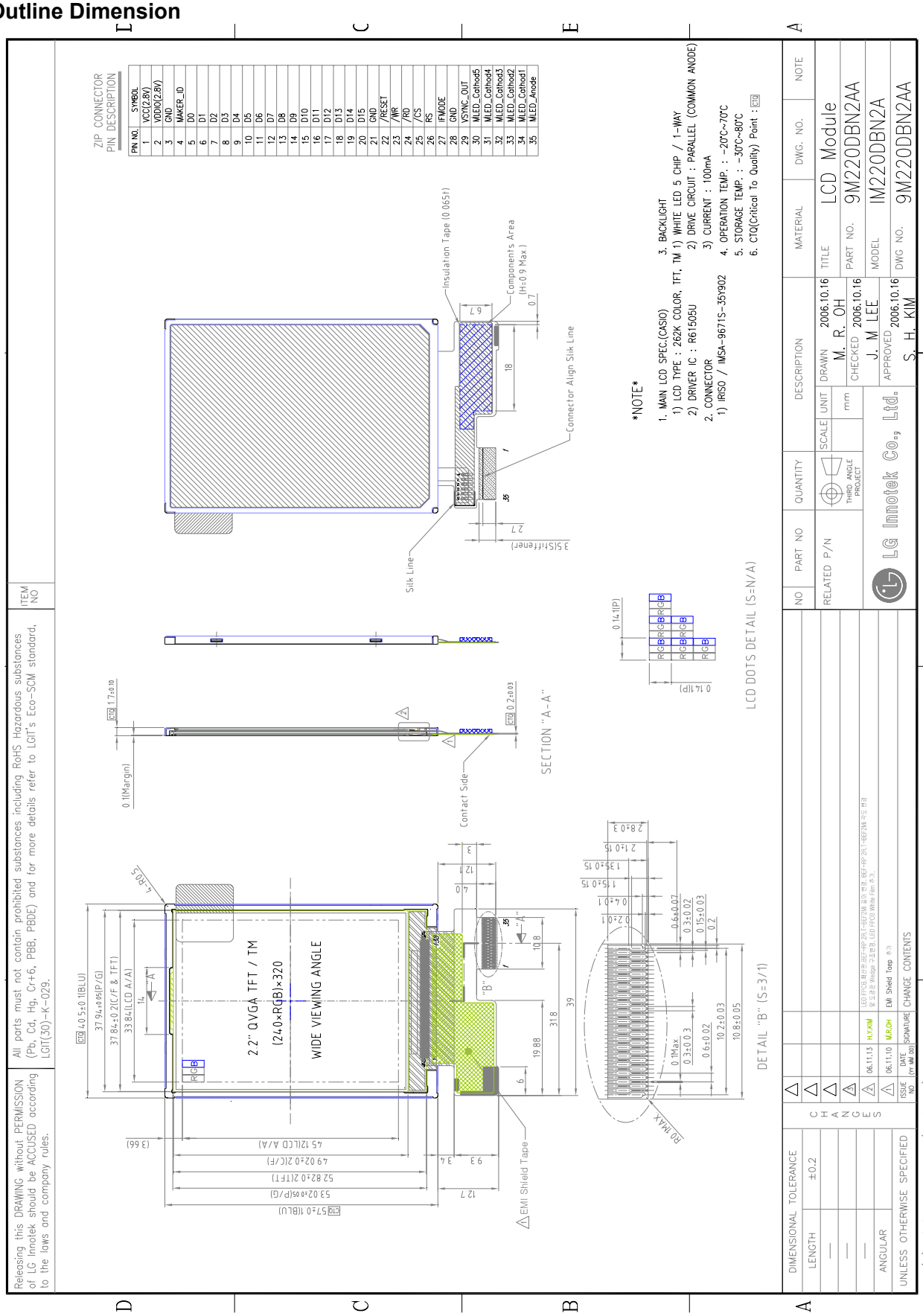

12. Packaging

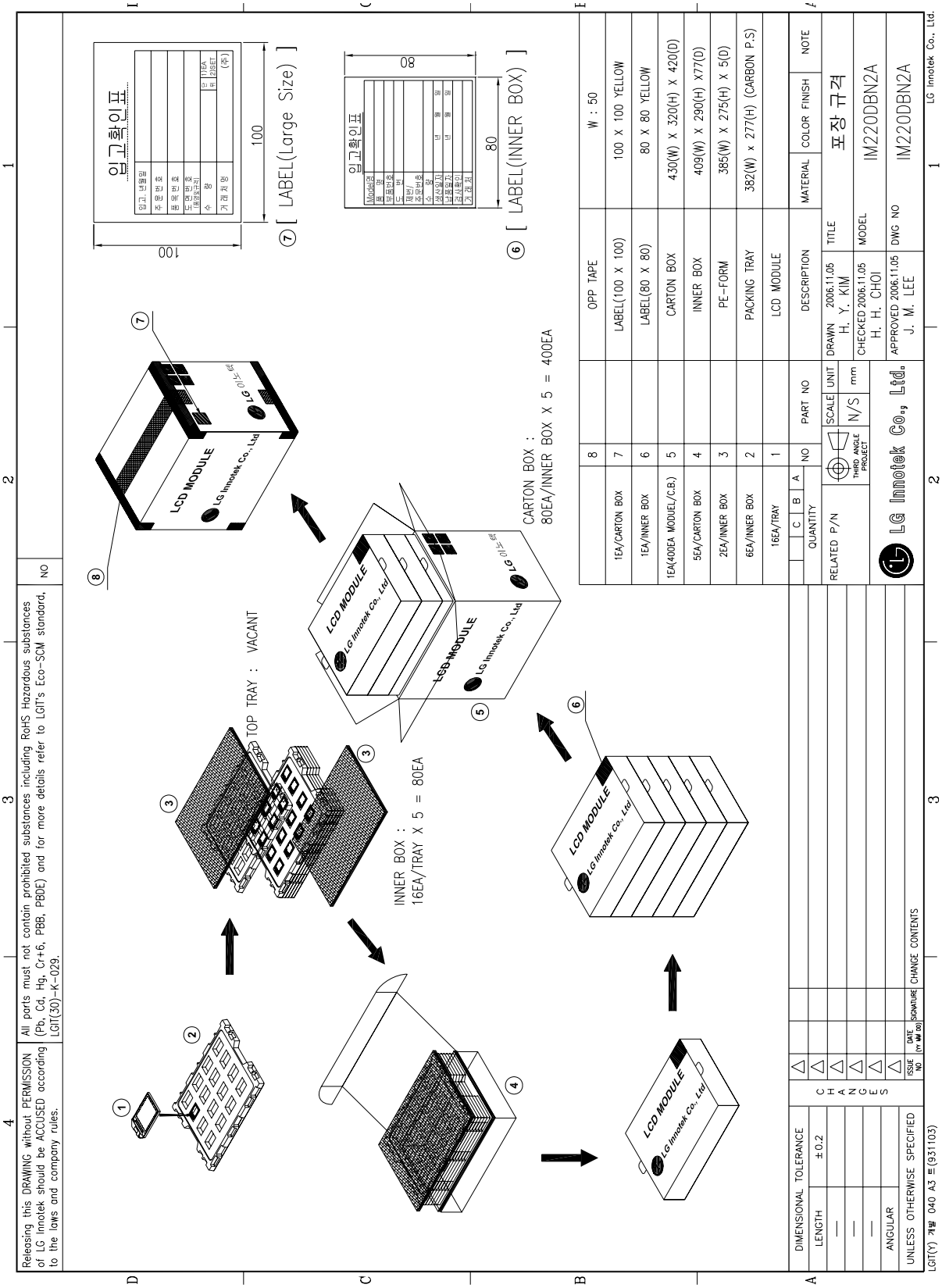

12.2 Designation of Lot Mark

Lot Mark

A	B	C	D	E		F	G	H	I	J

A : Module Maker

LG Innotek : L

B : Production Site

Gumi Factory : G, Yontai Factory : Y, Hoizou Factory :H

Dasol : D, ADTECH : A, KR : B

C: Year

D : Month

E : Date

F G H I J : Serial No. “00001 ~ 99999”

Note:

1. YEAR(A)

YEAR	2003	2004	2005	2006	2007	2008	2009	2010	2011	2012
Mark	3	4	5	6	7	8	9	0	1	2

2. MONTH(B)

MONTH	Jan.	Feb.	Mar.	Apr.	May.	Jun.	Jul.	Aug.	Sep.	Oct.	Nov.	Dec.
Mark	1	2	3	4	5	6	7	8	9	A	B	C

Caution AND Handling Precaution

To avoid causing extended damages such as accidents resulting in injury or death, fire accidents, or social damages or social damages if the LCD module fails, LG Innotek Display Technology is always endeavor to maintain sufficient quality of the LCD module in process of designing and manufacturing.

Please pay attention to the followings when you use this TFT LCD Module.

Safety

1) DISASSEMBLING OR MODIFICATION

Do not disassemble or modify the modules. Sensitive parts inside LCD module may be damaged, and dusts or scratches may mar the displays. Toshiba Matsushita Display Technology does not warrant the modules, if customer disassembled or modified them.

2) BREAKAGE OF LCD PANEL

Do not Ingest liquid crystal material, Do not Inhale this material, and Do not Permit this material to contact the skin, if glass of LCD panel is broken. If liquid crystal material contacts the skin, mouth or clothing, take the following actions immediately.

In case contact to the eye or mouth, rinse with large amount of running water for more than 15 minutes. In case contact to the skin or clothing, wipe it off immediately and wash with soap and large amount of running water for more than 15 minutes. The skin or closing may be damaged if liquid crystal material is left adhered. In case ingestion, rinse out the mouth well with water. After spewing up by drinking large amount of water, get medical treatment.

3) GLASS OF LCD PANEL

Be careful with chips of Grass that may cause injuring fingers or skin, when the glass is broken.

4) ABSOLUTE MAXIMUM RATINGS

Do not exceed the absolute maximum rating values under the worst probable conditions caused by the supply voltage variation, input voltage variation, variation in parts' constants, environmental temperature, etc., otherwise LCD module may be damaged.

5) POWER PROTECTION CIRCUIT

Employ protection circuit for power supply, whenever the specification specifies it.
A suitable protection circuit should be applied, based on each system design.
A fuse is not fitted to this module. Therefore, without a suitable power-supply protection device, dust or partial circuit failure may cause overheating and/or burning , which may lead to injury.

6) DISPOSAL

Always comply with all applicable environmental regulations, when disposing of the LCD.

7) EDGES OF PARTS
Be careful with edges of glass parts and metal frame, it may cause injuring.
For designing the system, give special consideration that the wiring and parts do not touch those edges.

8) RECOMMENDED OPERATING CONDITIONS

Don't exceed “the recommended operation conditions” in this specification. The performance and quality of the LCD module are warranted only when the LCD module is used within “the recommended operation conditions”. To use the LCD module over “the recommended operation conditions” may have bad influence on the characteristics and reliability of the LCD module and may shorten the life of the LCD module.

Therefore, when designing the whole set, not to be over “the recommended operation conditions”, you should fully take care of supply voltage change, characteristic of connection parts, serge of input-and-output line , and surrounding temperature.

Installation in Assembly

1. ESD (ELECTRO-STATIC DISCHARGE) PREVENTION
The circuit used in LCD module is very sensitive to ESD. The following caution should be taken when installing LCD module to an enclosure of the system in order to prevent damage of circuit used in LCD module.

1) HUMIDITY
Ambient humidity of working area is recommended to be higher than 50%(RH) in order to avoid ESD.

2) GROUNDING
- Person handling LCD modules should be grounded with wrist band.
- Tools like soldering iron and screw drivers and working benches should be grounded.
- Grounded electro-conductive mats are recommended to be covered on the floor of working area and surface of working benches.
- The grounding should be done through a resister of 0.5~1Mohms in order to prevent spark of ESD.

3) Be careful with touching metal portion of testing instruments in order to prevent unnecessary ESD.

4) Do not touch the electrode area of PCB and electrical parts like LSI, capacitor, connector pin, etc.

5) IONIZER
Using ionizer (an antistatic blower) is recommended at working area in order to reduce electro-static voltage.

6) REMOVING PROTECTION FILM
When removing protection film from LCD panel, peel off the tag slowly (more than one second) while blowing with ionizer toward the peeling face to minimize ESD which may damage electrical circuit.

2. DUST AND STAIN PREVENTION
1) WORKING AREA
Reduce dust level in working area. Especially the level of metal particle should be decreased, otherwise electrical circuit in LCD module may be damaged due to short circuit by metal particles.

2) FINGER PRINT
Use finger stalls or soft and dust-free gloves in order to keep clean appearance of LCD module when handled for incoming inspection and assembly.

3) PROTECTION FILM
LCD module may be shipped with "protection film" on LCD panel in order to prevent from scratches and dust. It is recommended to remove the film at later process of assembling.

4) WIPING OFF DUST ON THE PANEL
When LCD panel becomes dirty, wipe the panel surface off softly with absorbent cotton or another soft cloth. If necessary, breathe upon the panel surface and then wipe off immediately and softly again. Be careful not to spill organic solvents into the inside of LCD module. The solvents may damage driver IC and PCB area used inside module. The polarizer laminated to LCD panel and adhesives may be damaged by the solvents, so do not use any organic solvents for wiping off LCD panel.

5) ADHESIVE ON LCD PANEL
Be careful not to attach adhesive, grease, etc., on LCD panel, because it is difficult to remove them without any damages on LCD panel.

6) WATER SPOTS ON THE PANEL
Avoid the dewing or water condensation.
Wipe off a spot or spots of water or mist on LCD panel softly with absorbent cotton or another cloth as soon as possible if happened, otherwise discoloration or stain may be caused. And, damage may occur if water penetrates the inside.

3. INSTALLING LCD MODULE TO THE ENCLOSURE
1) INSTALLING LCD MODULE TO THE ENCLOSURE
Do not bend or twist LCD module even momentarily when the LCD module is installed into the system. Bending or twisting the LCD module may cause permanent damage.
When the FPC is bent, the radius of FPC curvature must be more than value of recommendation to prevent bending and twisting forces from affecting the connection of FPC.
Even temporary bending or twisting sometimes causes damage.

2) INTERFACE
Do not fasten screws, with catching interface FPC between LCD module and the enclosure.
This may cause bending of LCD module, or become the cause of a failure by damaging FPC.

4. MECHANICAL FORCES
1) CARRY
Hold the side of the plastic frame when you carry an LCD module by hand. If an LCD is carried using the FPC, it is likely to be damaged and the LCD will then malfunction. If you turn on the LCD with a broken FPC, it may cause smoke or burning.
Protection (eg gloves) for fingers and hands is recommended to avoid injury by broken glass.

2) STRONG MECHANICAL SHOCK
Avoid strong mechanical shock, such as dropping the LCD from the work bench, or knocking it against a hard object.
These may cause the glass panel to crack, or cause other mis-operation.

3) EXCESSIVE FORCE
Avoid applying excessive force, like pushing the surface of LCD panel. This may cause scratches or breakage of the panel, or a failure of the module.

4) SCRATCHES ON THE PANEL

Do not put heavy object such as tools, books, etc., and do not pile up LCD modules.
Be careful not to touch the surface of the polarizer with any hard and sharp object. These parts are so sensitive and can easily be scratched, even if protected by a film.

5)Connector

When inserting or disconnecting the connector into a connector of the LCD module, care should be taken to ensure that no strong external force is applied to the connector on the LCD module side.
A strong external force applied to the connector or the FPC may damage their connections.
When assembling a module into a system, pay extra attention to ensure that no part such as the FPC etc. should be caught between the case of the system and the module. Make sure that the input signal connector of a module is securely and correctly connected to the connector on the system, not skewed, or incompletely connected.
Inputting a signal etc. into the module with connectors incorrectly inserted may cause a circuit component or components to malfunction.

6) FPC

When inserting or disconnecting the connector of the LCD module into a connector of the system, care should be taken to ensure that no strong external force is applied to the FPC on the LCD module side. A strong external force applied to the FPC may damage their connections.
When assembling a module into a system, pay extra attention to ensure that no part such as the FPC etc. should be caught between the case of the system and the module.
Make sure that the input signal connector of a module is securely and correctly connected to the connector on the system, not skewed, or incompletely connected. Inputting a signal etc. into the module with connectors incorrectly inserted may cause a circuit component or components to malfunction. Be careful not to pull or damage the FPC cables, to avoid mechanical damage in FPC and connection part of FPC and cell.

5. OPERATION

1) POWER SUPPLY

Power supplies should always be turned off during the assembly process.
Do not connect or disconnect the power cables and connectors with power applied to LCD module. This may cause damage to the LCD module circuit.
In operating module at the inspection process, and so on, the supply voltage and signals of driving device must satisfy the sequence of power supplies and signals described in this specifications.

2) GAS

Do not expose the LCD module to any gas which is not normally contained in the atmosphere, it may cause mis-operation or defects.

3) USED FOR LONG TERM

When a LCD module is used for a long term, the characteristics of LCD module might be changed and it may be out of the standard of “4.3 Optical Specifications” due to LED discoloration.
LED has the characteristics of shifting optical characteristics by the long term use.

Transportation and Storage

1) TEMPERATURE
Do not store LCD modules in a high temperature and high humidity condition, higher than 35ºC and 70%(RH) for a long term, meaning about one month or more, otherwise this may deteriorate the quality of the display. When you unavoidably store LCD modules for a long time, store between 0 and 35ºC, with a relative humidity 70% or lower.

2) LOW TEMPERATURE
Be careful not to leave it where the temperature is below specified storage temperature because the liquid crystal of the display panel may be damaged.

3) ULTRA VIOLET RAY
Store LCD module without exposure to direct sunlight or fluorescent lamps in order to prevent the module from strong ultra violet ray.

4) CLEANLINESS
Keep the LCD module in clean place, because any dust, hard particle may damage the polarizer, or dust invades the inside of the LCD module.

5) CONDENSATION OF WATER
The modules should be stored under a condition where no condensation of water is allowed. It may cause mis-operation or defects. Be especially careful not to make a module work under the condition that condensation of water appears.

6) PACKAGING
When you must re-package a LCD module after it has been removed from the original packaging, it is recommended to re-pack using the original package box and package material.

APPENDIX

( ) Preliminary Specification

(●) Final Specification

Customer	LG Electronics (KE970, U970)
Model	IM220DBN2A
Supplier	LG INNOTEK CO. LTD

Approved by LGE		Proposed by LG Innotek	
APPROVED BY	SIGNATURE	APPROVED BY	SIGNATURE
		S. H. KIM	
DESIGNED BY	SIGNATURE	DESIGNED BY	SIGNATURE
		J.S.JEONG	

VER.0.3	4th. Apr. 2007

Revision History

(A sheet refers to the sheet number after revision)

Date	Rev.	Sheet (New)	Item	Contents	Reason
2006/11/06	0.0				Specification Release
2006/11/10	0.1	5	Partlist		Added Chassis
2006/12/01	0.2	4,5	Partlist Schematic	Part list Schematic	Add ACF Part No. Add Conductive Tape Add Resistor
2006/12/27	0.3	4	Schematic	Schematic	Correction Errorta.
2007/04/04	0.4	p.38	Partlist	1- Way, 5LED, SSC J5 F Rank (NPI) 1- Way, 5LED, SSC J5 F Rank (KJP) 1- Way, 5LED, LGIT Q3 F Rank (KJP)	Added BLU. Maker
				1.0uF, K, 10V, X5R (1005) TDK / MURATA / TAIYO YUDEN/ KYOCERA	Added Cap. Maker (Kyocera)

— Table of Contents —

Chap 1. SCHEMATIC

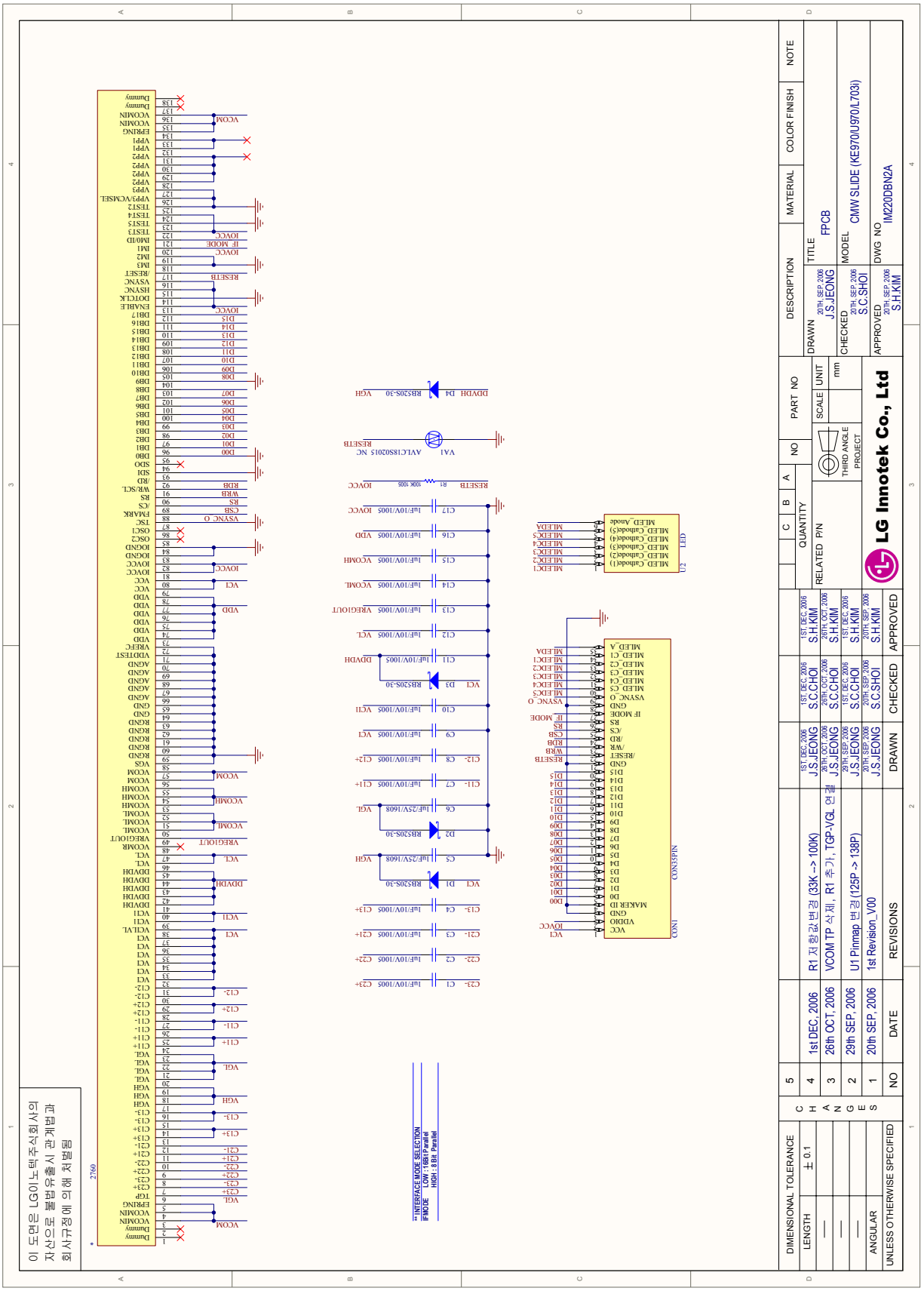

Chap 2. Part List

No	Part Name	Specification	Maker	EA	Note
1	TAPE INSULATOR	HKP-250BS, 38.2*7.8*0.065t	TMK	1	-
2	TAPE REMOVE	#9448HK, 12*12*0.1T	3M (한국뉴텍)	1	-
3	TAPE CONDUCTIVE	DK-EK102(T), 38*12.77*0.08	TMK	1	-
4	TAPE UV-CUT	#850B, 37.34*5.67*0.05T	3M (한국뉴텍)	1	-
5	BLU	1- Way, 5LED, SSC J5 F Rank LED 1- Way, 5LED, SSC J5 F Rank LED 1- Way, 5LED, LGIT Q3 F Rank LED	NPI KJP KJP	1	-
6	CHASSIS	Sus 304, 0.2t	창영전자	1	-
7	ADHESIVE UV	#3736	LOCTITE		COG
8	ADHESIVE UV	#3851	LOCTITE		FOG
9	FPCB	0.15T, 2Layer	ACT	1	-
10	CHIP RESISTOR	100KΩ, J, 1005	ROHM, KAMAYA	1	R1
11	CHIP CAPACITOR	1.0uF, K, 10V, X5R (1005)	TDK / MURATA / TAIYO YUDEN/ KYOCERA	15	C1-C4,C7-C17
12	CHIP CAPACITOR	1.0uF, K, 25V, X5R (1608)	TDK / MURATA / TAIYO YUDEN	2	C5, C6
13	SCHOTTKY DIODE	VR=30V, VF(max)=0.5V@If = 200mA, Io=200mA	DIODES / ROHM	4	D1,D2,D3,D4
14	ACF FOG	CP9731N 1mm	SONY	-	-
15	Main LDI	R61505U	RENESAS	1	-
16	ACF COG	CP8220NI4 2mm CP3420AI4 2mm	SONY	-	-
17	Main Panel	2.2” 240*320 TM-TFT	CASIO	1	With POL

Chap 3. FPCB Layout

3-1. Top Layer

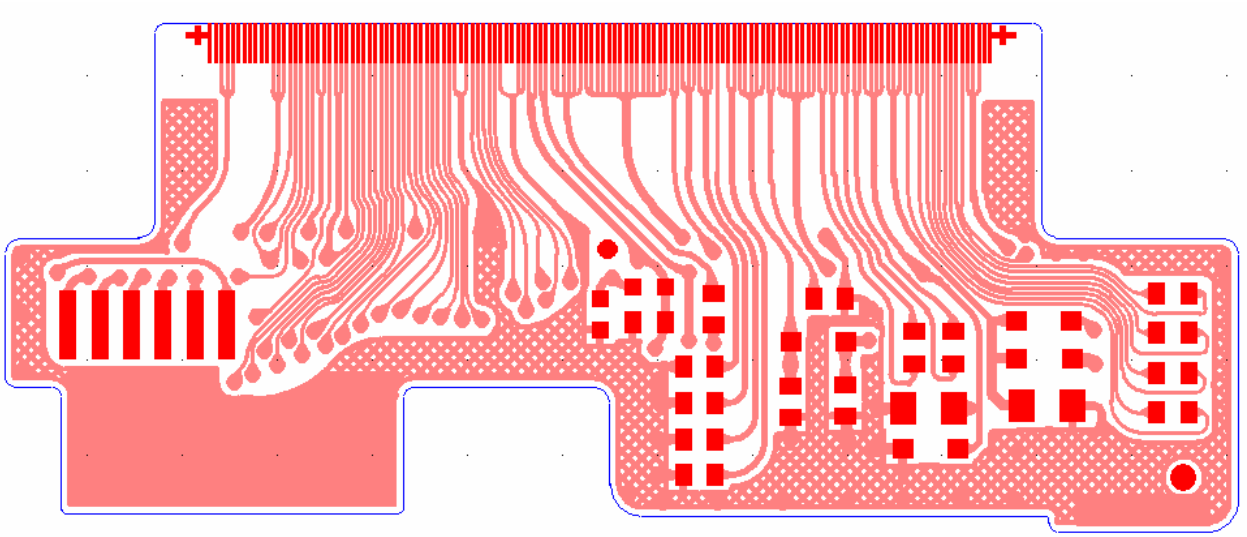

3-2. Bottom Layer

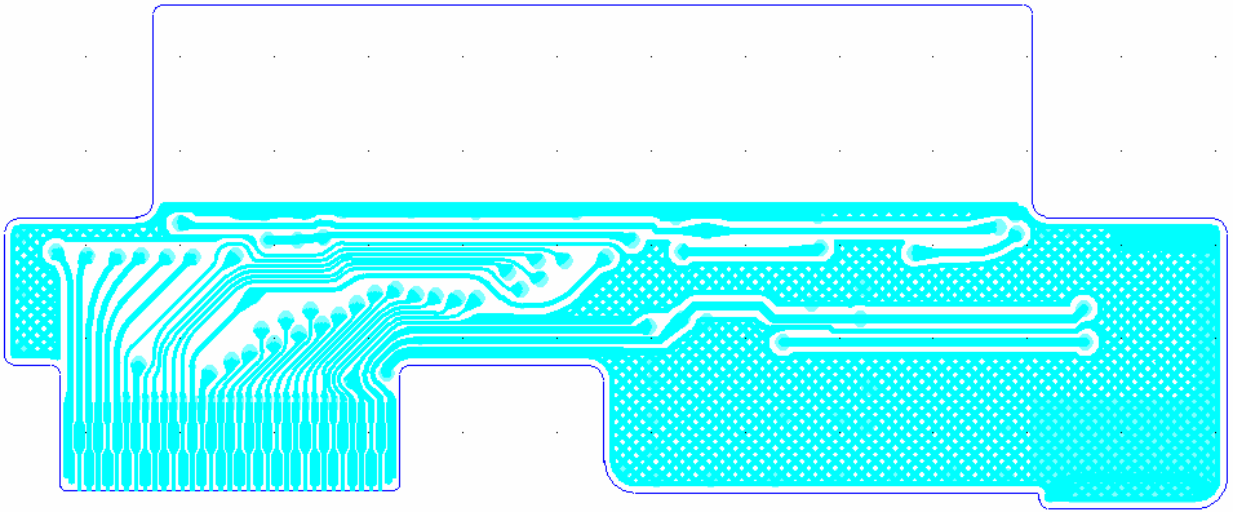

3-3. Silk Layer (Top)