NLT Technologies, Ltd.

☆

TFT COLOR LCD MODULE

NL10260BC19-01D

23cm (8.9 Type)
WSVGA
LVDS interface (1port)

DATA SHEET

DOD-PP-1473 (2nd edition)

This DATA SHEET is updated document from DOD-PP-0715(1).

All information is subject to change without notice. Please confirm the sales representative before starting to design your system.

INTRODUCTION ☆

NLT does and will not assume any liability for infringement of patents, copyrights or other intellectual property rights of any third party arising out of or in connection with application of the products described herein except for that directly attributable to mechanisms and workmanship thereof. No license, express or implied, is granted under any patent, copyright or other intellectual property right of NLT.

Some electronic products would fail or malfunction at a certain rate. In spite of every effort to enhance reliability of products by NLT, the possibility of failures and malfunction might not be avoided entirely. To prevent the risks of damage to death, human bodily injury or other property arising out thereof or in connection therewith, each customer is required to take sufficient measures in its safety designs and plans including, but not limited to, redundant system, fire-containment and anti-failure.

The products are classified into three grades: **"Standard"**, **"Special"**, and **"Specific"**.
Each quality grade is designed for applications described below. Any customer who intends to use a product for application other than that of Standard is required to contact an NLT sales representative in advance.

The **Standard:** Applications as any failure, malfunction or error of the products are free from any damage to death, human bodily injury or other property (Products Safety Issue) and not related the safety of the public (Social Issues), like general electric devices.
Examples: Office equipment, audio and visual equipment, communication equipment, test and measurement equipment, personal electronic equipment, home electronic appliances, car navigation system (with no vehicle control functions), seat entertainment monitor for vehicles and airplanes, fish finder (except marine radar integrated type), PDA, etc.

The **Special:** Applications as any failure, malfunction or error of the products might directly cause any damage to death, human bodily injury or other property (Products Safety Issue) and the safety of the public (Social Issues) and required high level reliability by conventional wisdom.
Examples: Vehicle/train/ship control system, traffic signals system, traffic information control system, air traffic control system, surgery/operation equipment monitor, disaster/crime prevention system, etc.

The **Specific:** Applications as any failure, malfunction or error of the products might severe cause any damage to death, human bodily injury or other property (Products Safety Issue) and the safety of the public (Social Issues) and developed, designed and manufactured in accordance with the standards or quality assurance program designated by the customer who requires extremely high level reliability and quality.
Examples: Aerospace system (except seat entertainment monitor), nuclear control system, life support system, etc.

The quality grade of this product is the **"Standard"** unless otherwise specified in this document.

CONTENTS

1. OUTLINE

1.1 STRUCTURE AND PRINCIPLE

Color LCD module NL10260BC19-01D is composed of the amorphous silicon thin film transistor liquid crystal display (a-Si TFT LCD) panel structure with driver LSIs for driving the TFT (Thin Film Transistor) array and a backlight.

The a-Si TFT LCD panel structure is injected liquid crystal material into a narrow gap between the TFT array glass substrate and a color-filter glass substrate.

Color (Red, Green, Blue) data signals from a host system (e.g. signal generator, etc.) are modulated into best form for active matrix system by a signal processing board, and sent to the driver LSIs which drive the individual TFT arrays.

The TFT array as an electro-optical switch regulates the amount of transmitted light from the backlight assembly, when it is controlled by data signals. Color images are created by regulating the amount of transmitted light through the TFT array of red, green and blue dots.

1.2 APPLICATION

- For industrial use

1.3 FEATURES

- Ultra-wide viewing angle (Adoption of Ultra-Advanced Super Fine TFT (UA-SFT))
- High contrast
- LVDS interface
- Selectable LVDS data input map
- Selectable 8bit or 6bit digital signals for data of RGB ☆
- LED backlight type
- Replaceable lamp for backlight ☆
- Acquisition product for UL60950-1/CSA-C22.2 No.60950-1-03 (File number: E170632)
- Compliant with the European RoHS directive (2011/65/EU) ☆

2. GENERAL SPECIFICATIONS

Display area	195.072 (H) × 113.4 (V) mm	
Diagonal size of display	23cm (8.9 inches)	
Drive system	a-Si TFT active matrix	
Display color	16,777,216 colors (At 8-bit input, FRC terminal= High) 262,144 colors (At 6-bit input, FRC terminal= Low or Open)	
Pixel	1,024 (H) × 600 (V) pixels	
Pixel arrangement	RGB (Red dot, Green dot, Blue dot) vertical stripe	
Dot pitch	0.0635 (H) × 0.189 (V) mm	
Pixel pitch	0.1905 (H) × 0.189 (V) mm	
Module size	214.0 (W) × 129.0 (H) × 5.7 (D) mm (typ.)	
Weight	170 g (typ.)	
Contrast ratio	700:1 (typ.)	
Viewing angle	*At the contrast ratio ≥10:1* • Horizontal: Right side 88° (typ.), Left side 88° (typ.) • Vertical: Up side 88° (typ.), Down side 88° (typ.)	
Designed viewing direction	Viewing angle with optimum grayscale (γ≒2.2): Normal axis (perpendicular)	
Polarizer surface	Antiglare	
Polarizer pencil-hardness	3H (min.) [by JIS K5600]	☆
Color gamut	*At LCD panel center* 60 % (typ.) [against NTSC color space]	
Response time	*Ton+Toff (10%←→ 90%)* 25 ms (typ.)	
Luminance	*At IL=15mA/One circuit* 300 cd/m^2 (typ.)	☆
Signal system	LVDS 1port (Receiver: THC63LVDF84B, THine Electronics Inc. or equivalent) 8bit/6bit digital signals for data of RGB colors, Dot clock (CLK), Data enable (DE)	
Power supply voltage	LCD panel signal processing board: 3.3V	
Backlight	LED backlight type: (Replaceable part • Lamp holder set: Type No. 89LHS07)	
Power consumption	*At IL=15mA/One circuit, Checkered flag pattern* 3.0 W (typ.)	☆

3. BLOCK DIAGRAM

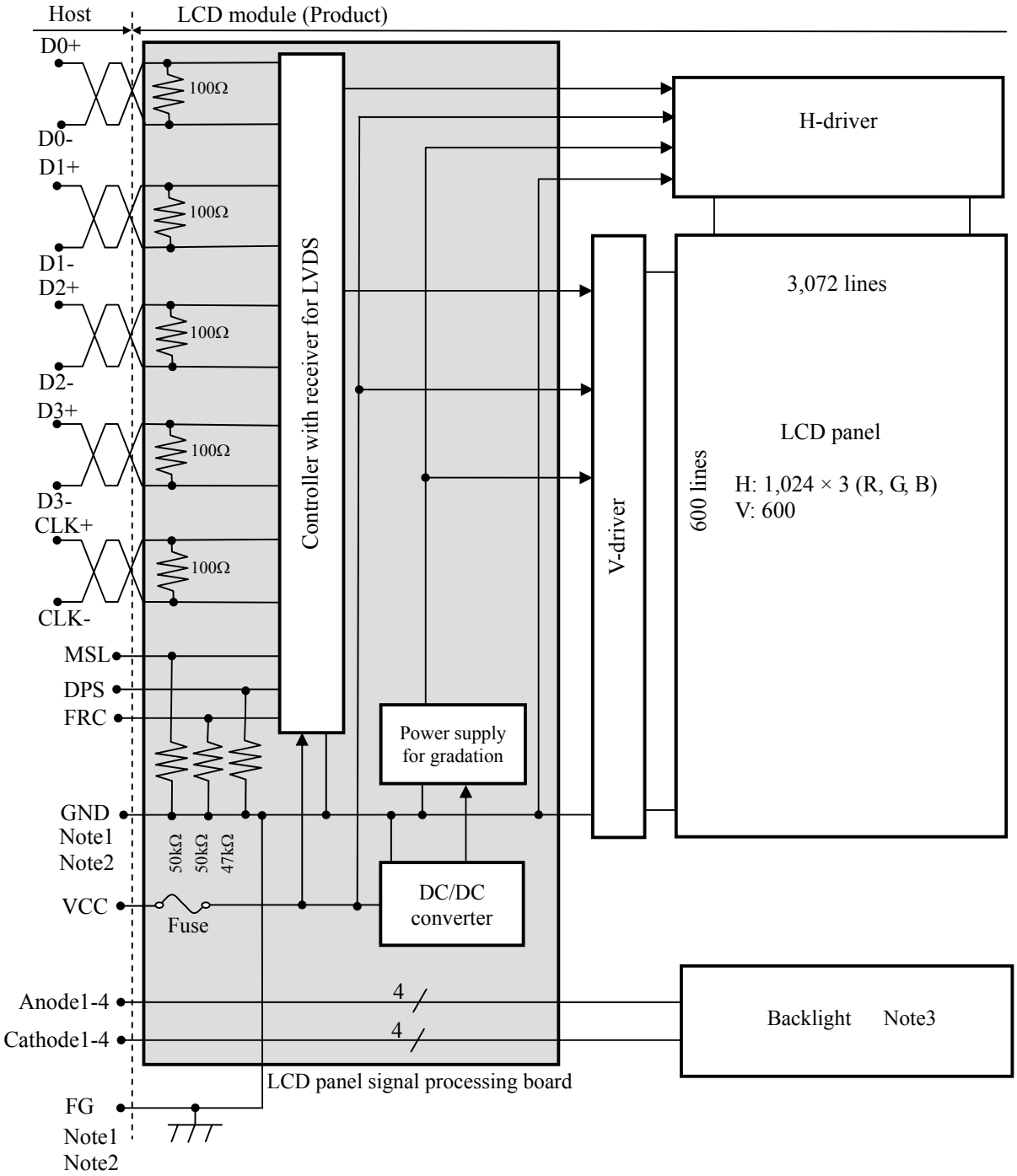

Note1: Relations between GND (Signal ground) and FG (Frame ground) in the LCD module are as follows.

GND - FG	Connected

Note2: GND and FG must be connected to customer equipment's ground, and it is recommended that these grounds be connected together in customer equipment.

Note3: Backlight in detail

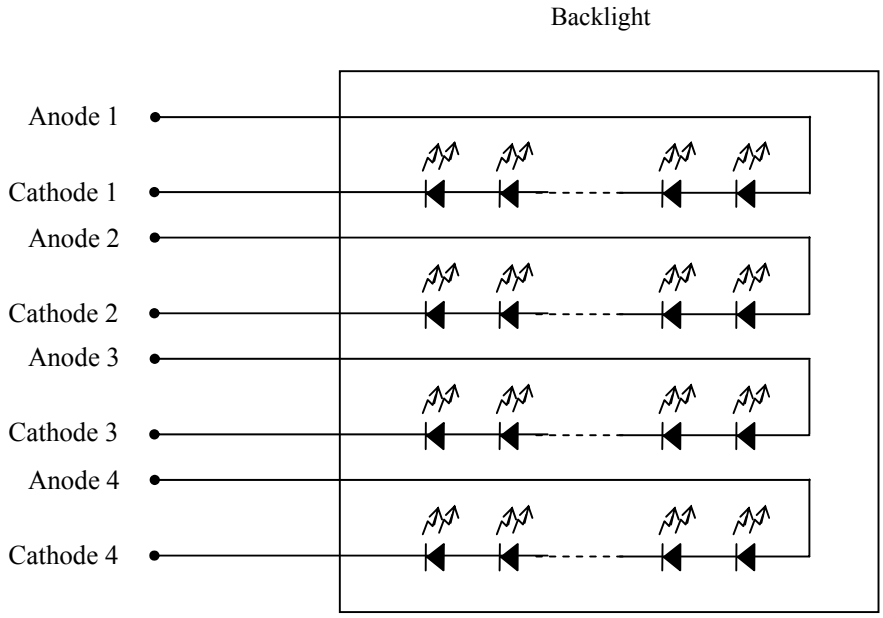

4. DETAILED SPECIFICATIONS

4.1 MECHANICAL SPECIFICATIONS

Parameter	Specification	Unit
Module size	214.0 ± 0.5 (W) × 129.0 ± 0.5 (H) × 5.7 ± 0.5 (D) Note1	mm
Display area	195.072 (H) × 113.4 (V) Note1	mm
Weight	170 (typ.),180(max.)	g

Note1: See "**8. OUTLINE DRAWINGS**".

4.2 ABSOLUTE MAXIMUM RATINGS

Parameter		Symbol	Rating	Unit	Remarks
Power supply voltage	LCD panel signal processing board	VCC	-0.3 to +4.0	V	-
Input voltage for signals	Display signals Note1	VD	-0.3 to VCC+0.3	V	
	Function signals Note2	VF			
Backlight	Power dissipation	PD	1.1	W	per one circuit ☆
	Forward current	IL	Note3	mA	☆
Storage temperature		Tst	-30 to +80	°C	-
Operating temperature	Front surface	TopF	-20 to +70	°C	Note4
	Rear surface	TopR	-20 to +70	°C	Note5
Relative humidity Note6		RH	≤ 95	%	Ta ≤ 40°C
			≤ 85	%	40°C <Ta≤ 50°C
			≤ 55	%	50°C <Ta≤ 60°C
			≤ 36	%	60°C <Ta≤ 70°C
Absolute humidity Note6		AH	≤ 70 Note7	g/m^3	Ta> 70°C

Note1: D0+/-, D1+/-, D2+/-, D3+/-and CLK+/-. ☆
Note2: DPS, FRC and MSL. ☆

Note3: Forward current

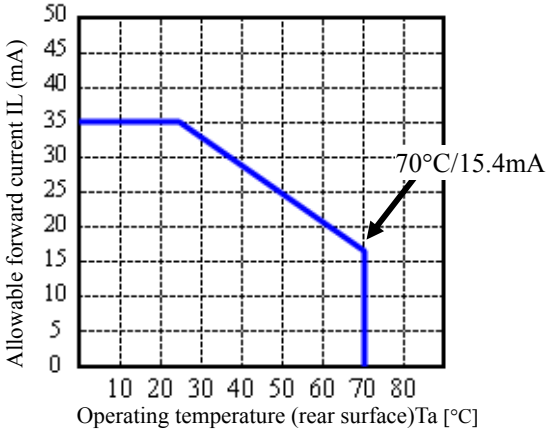

☆

Note4: Measured at center of LCD panel surface (including self-heat)
Note5: Measured at center of LCD module's rear shield surface (including self-heat)
Note6: No condensation
Note7: Water amount at Ta= 70°C and RH= 36%

4.3 ELECTRICAL CHARACTERISTICS

4.3.1 LCD panel signal processing board

(Ta= 25°C)

Parameter		Symbol	min.	typ.	max.	Unit	Remarks
Power supply voltage		VCC	3.0	3.3	3.6	V	-
Power supply current		ICC	-	400 Note1	770 Note2	mA	at VCC= 3.3V
Permissible ripple voltage		VRP	-	-	100	mVp-p	for VCC
Differential input threshold voltage for LVDS receiver	High	VTH	-	-	+100	mV	at VCM= 1.2V Note3
	Low	VTL	-100	-	-	mV	
Terminating resistance		RT	-	100	-	Ω	-
Input voltage for DPS, FRC and MSL signals	High	VFH	0.7VCC	-	VCC	V	CMOS level
	Low	VFL	0	-	0.3VCC	V	
Input current for DPS, FRC and MSL signals	High	IFH	-	-	300	μA	-
	Low	IFL	-300	-	-	μA	

☆

Note1: Checkered flag pattern [by EIAJ ED-2522]
Note2: Pattern for maximum current
Note3: Common mode voltage for LVDS receiver

4.3.2 Backlight lamp ☆

(Ta= 25°C, Note1, Note2, Note3)

Parameter	Symbol	min.	typ.	max.	Unit	Remarks
Forward current	IL	-	15	15.4	mA	Note4 ☆
Forward voltage	VL	-	28.35	31.5	V	at IL= 15mA / One circuit ☆

Note1: Please drive with constant current.
Note2: The above specifications are for one LED circuit of the backlight. ☆
Note3: The Luminance uniformity may be changed depending on the current variation between 4 circuits. It is recommended that the current value difference among the circuits be less than 5%.
Note4: See "**4.2 ABSOLUTE MAXIMUM RATINGS Note3**".

4.3.3 Power supply voltage ripple

This product works if the ripple voltage levels are over the permissible values as the following table, but there might be noise on the display image. ☆

Power supply voltage		Ripple voltage Note1 (Measure at input terminal of power supply)	Unit
VCC	3.3V	≤ 100	mVp-p

Note1: The permissible ripple voltage includes spike noise.

4.3.4 Fuse

Parameter	Fuse		Rating	Fusing current	Remarks
	Type	Supplier			
VCC	FCC16202AB	KAMAYA ELECTRIC CO., LTD.	2.0A 36V	4.0A	Note1 ☆

Note1: The power supply's rated current must be more than the fusing current. If it is less than the fusing current, the fuse may not blow in a short time, and then nasty smell, smoke and so on may occur. ☆

4.4 POWER SUPPLY VOLTAGE SEQUENCE

4.4.1 LCD panel signal processing board

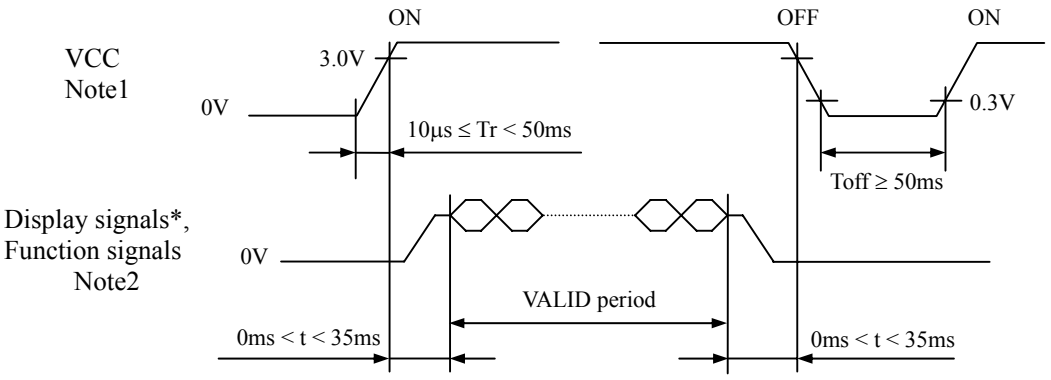

☆

* These signals should be measured at the terminal of 100Ω resistance.

Note1: If there is a voltage variation (voltage drop) at the rising edge of VCC below 3.0V, there is a possibility that a product does not work due to a protection circuit. ☆

Note2: Display signals (D0+/-, D1+/-, D2+/-, D3+/- and CLK+/-) and function signal (FRC, DPS and MSL) must be set to Low or High-impedance, except the VALID period (See above sequence diagram), in order to avoid the circuitry damage. ☆
If some of display and function signals of this product are cut while this product is working, even if the signal input to it once again, it might not work normally. If a customer stops the display and function signals, VCC also must be shut down.

4.4.2 Backlight lightning circuit

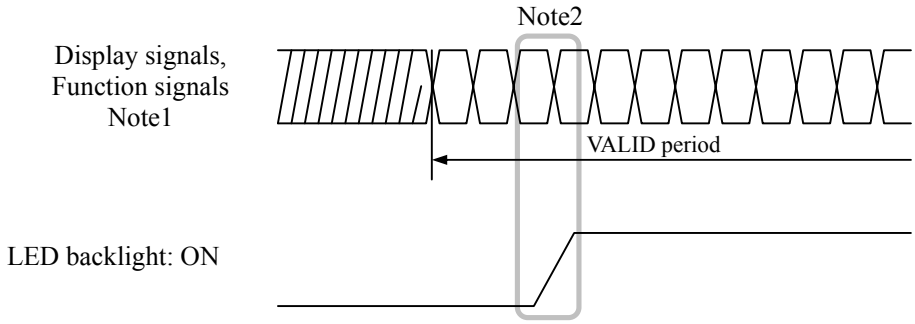

Note1: These are the display and function signals for LCD panel signal processing board.

Note2: The backlight should be turned on within the valid period of display and function signals, in order to avoid unstable data display.

4.5 CONNECTIONS AND FUNCTIONS FOR INTERFACE PINS

4.5.1 LCD panel signal processing board

CN1 socket (LCD module side): DF19L-30P-1H (Hirose Electric Co., Ltd. (HRS))
Adaptable plug: DF19G-30S-1C, DF19G-30S-1F (Hirose Electric Co., Ltd. (HRS))

Pin No.	Symbol	Signal	Input data signal: 8bit		Input data signal: 6bit	Remarks
			MAP A	MAP B		
1	VCC	Power supply	Power supply			Note1
2	VCC					
3	GND	Ground	Ground			Note1
4	D0-	Pixel data	R2-R7,G2	R0-R5,G0		Note2
5	D0+					
6	GND	Ground	Ground			Note1
7	D1-	Pixel data	G3-G7,B2-B3	G1-G5,B0-B1		Note2
8	D1+					
9	GND	Ground	Ground			Note1
10	D2-	Pixel data	B4-B7,DE	B2-B5,DE		Note2
11	D2+					
12	GND	Ground	Ground			Note1
13	CLK-	Pixel clock	Pixel clock			Note2
14	CLK+					
15	GND	Ground	Ground			Note1
16	D3- or GND	Pixel data or Ground	R0-R1,G0-G1,B0-B1	R6-R7,G6-G7,B6-B7	Ground	Note1, Note2, Note3
17	D3+ or GND	Pixel data or Ground				
18	FRC	Selection of the number of colors	High		Low or Open	Note3 Note4
19	DPS	Selection of scan direction	High: Reverse scan Low or Open: Normal scan			Note5
20	MSL	Selection of LVDS input map	Low	High	Low	Note4 ☆
21	K4	Cathode	Cathode 4			
22	K3	Cathode	Cathode 3			
23	K2	Cathode	Cathode 2			-
24	K1	Cathode	Cathode 1			-
25	N. C.	N. C.	Keep this pin Open.			-
26	N. C.					
27	A4	Anode	Anode 4			-
28	A3	Anode	Anode 3			-
29	A2	Anode	Anode 2			-
30	A1	Anode	Anode 1			-

Note1: All GND and VCC terminals should be used without any non-connected lines.
Note2: Twist pair wires with 100Ω (Characteristic impedance) should be used between LCD panel signal processing board and LVDS transmitter.
Note3: See "**4.6 DISPLAY COLORS AND INPUT DATA SIGNALS**".
Note4: See "**4.5.3 Connection between receiver and transmitter for LVDS**".
Note5: See "**4.8 SCANNING DIRECTIONS**". ☆

4.5.2 Positions of plug and socket

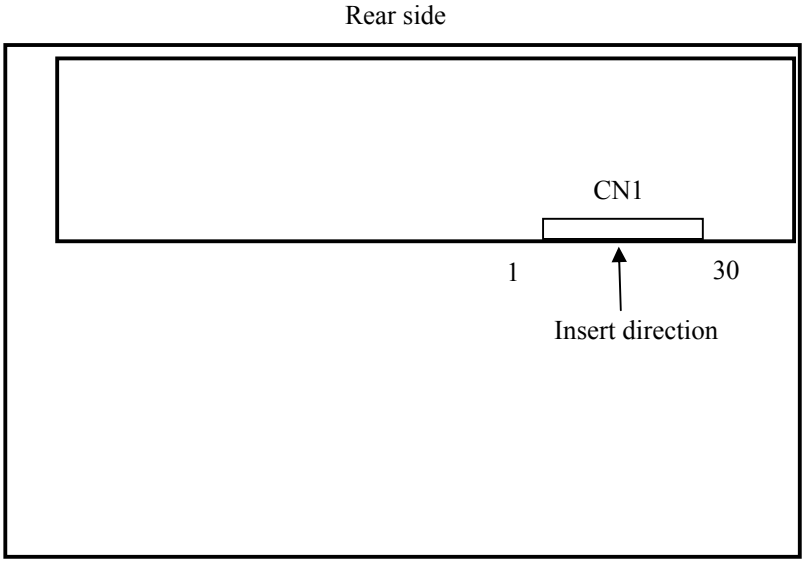

4.5.3 Connection between receiver and transmitter for LVDS

(1) Input data signal: 8bit, MAP A

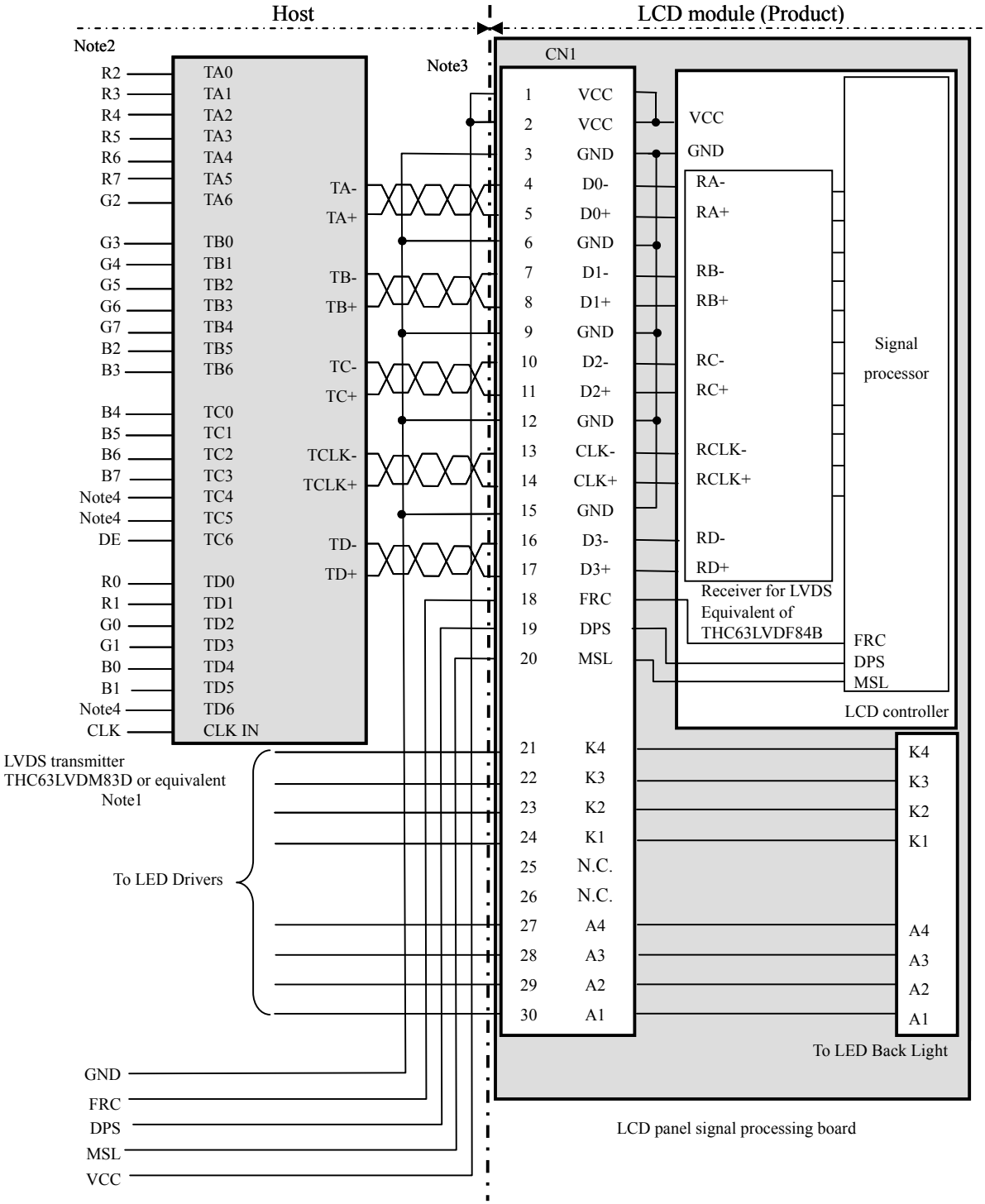

Note1: Recommended transmitter THC63LVDM83D (THine Electronics Inc.) or equivalent. ☆

Note2: LSB (Least Significant Bit) - R0, G0, B0 MSB (Most Significant Bit) - R7, G7, B7

Note3: Twist pair wires with 100Ω (Characteristic impedance) should be used between LCD panel signal processing board and LVDS transmitter.

Note4: Input signals to TC4, TC5 and TD6 are not used inside the product, but do not keep TC4, TC5 and TD6 open to avoid noise problem.

(2) Input data signal: 8bit, MAP B

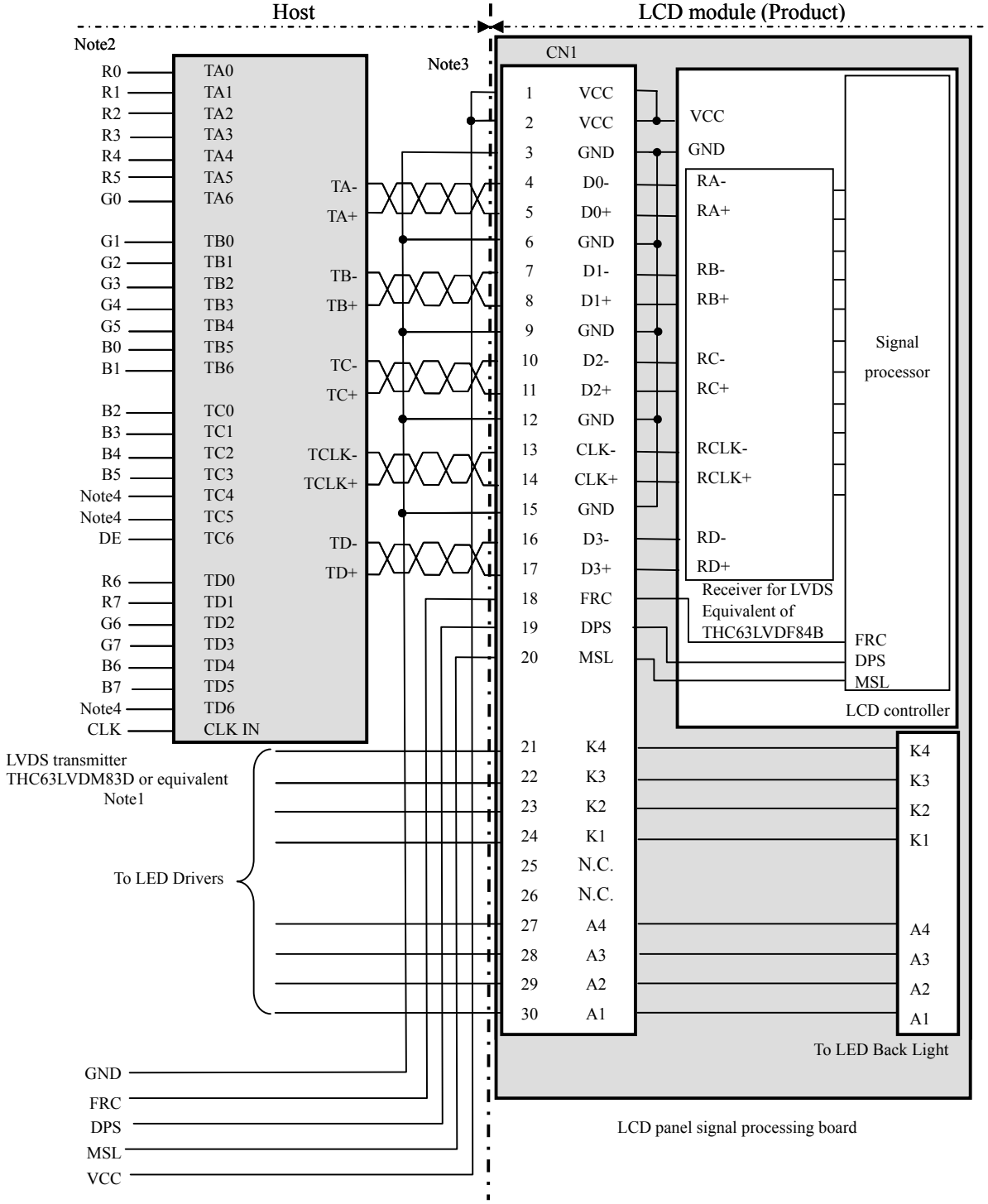

Note1: Recommended transmitter THC63LVDM83D (THine Electronics Inc.) or equivalent

Note2: LSB (Least Significant Bit) - R0, G0, B0 MSB (Most Significant Bit) - R7, G7, B7

Note3: Twist pair wires with 100Ω (Characteristic impedance) should be used between LCD panel signal processing board and LVDS transmitter.

Note4: Input signals to TC4, TC5 and TD6 are not used inside the product, but do not keep TC4, TC5 and TD6 open to avoid noise problem.

(3) Input data signal: 6bit

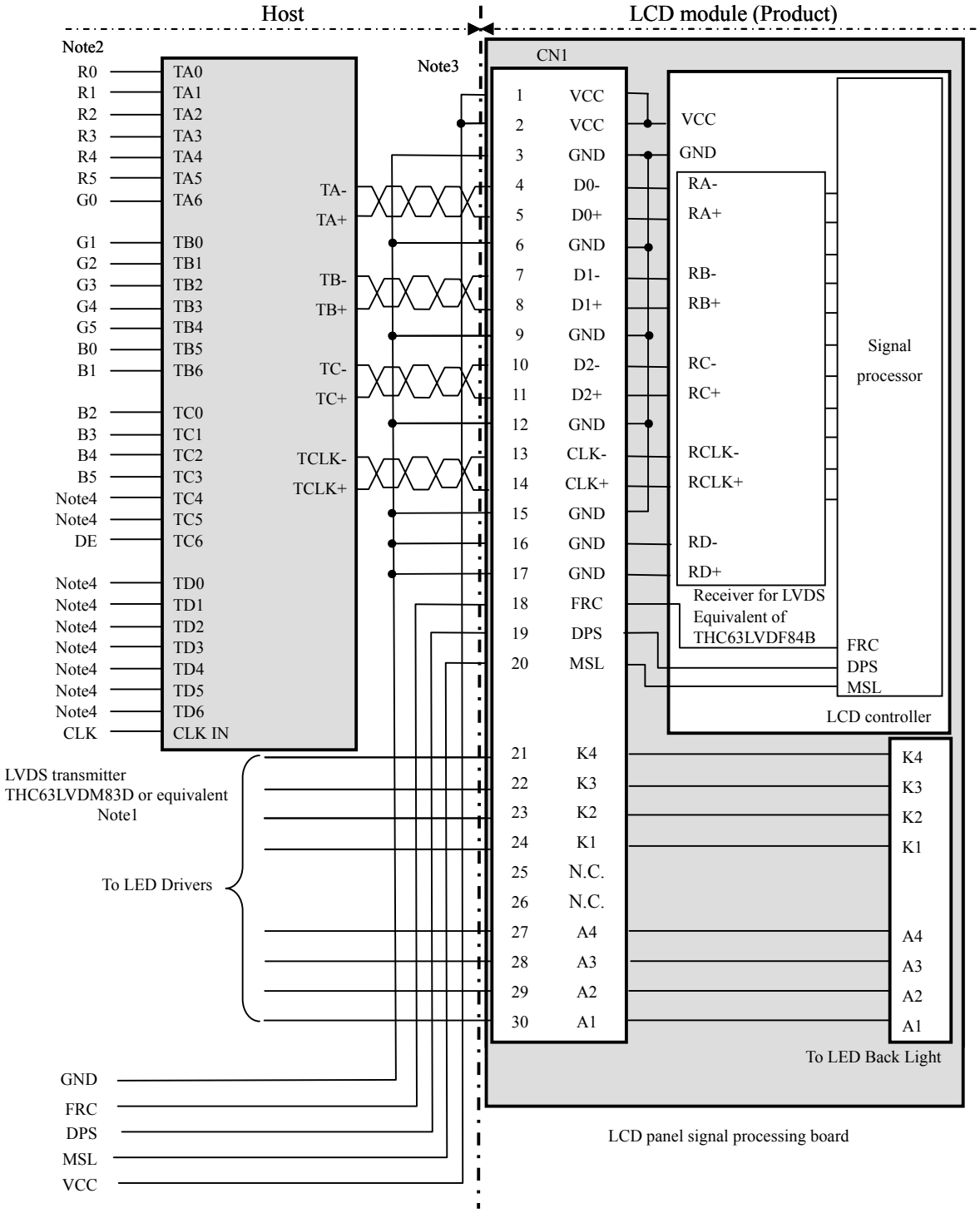

Note1: Recommended transmitter THC63LVDM83D (THine Electronics Inc.) or equivalent ☆

Note2: LSB (Least Significant Bit) – R0, G0, B0 MSB (Most Significant Bit) – R5, G5, B5

Note3: Twist pair wires with 100Ω (Characteristic impedance) should be used between LCD panel signal processing board and LVDS transmitter.

Note4: Input signals to TC4, TC5 and TD0 to 6 are not used inside the product, but do not keep TC4, TC5 and TD0 to 6 open to avoid noise problem. ☆

4.5.4 Input data mapping

(1) Input data signal: 8bit, MAP A

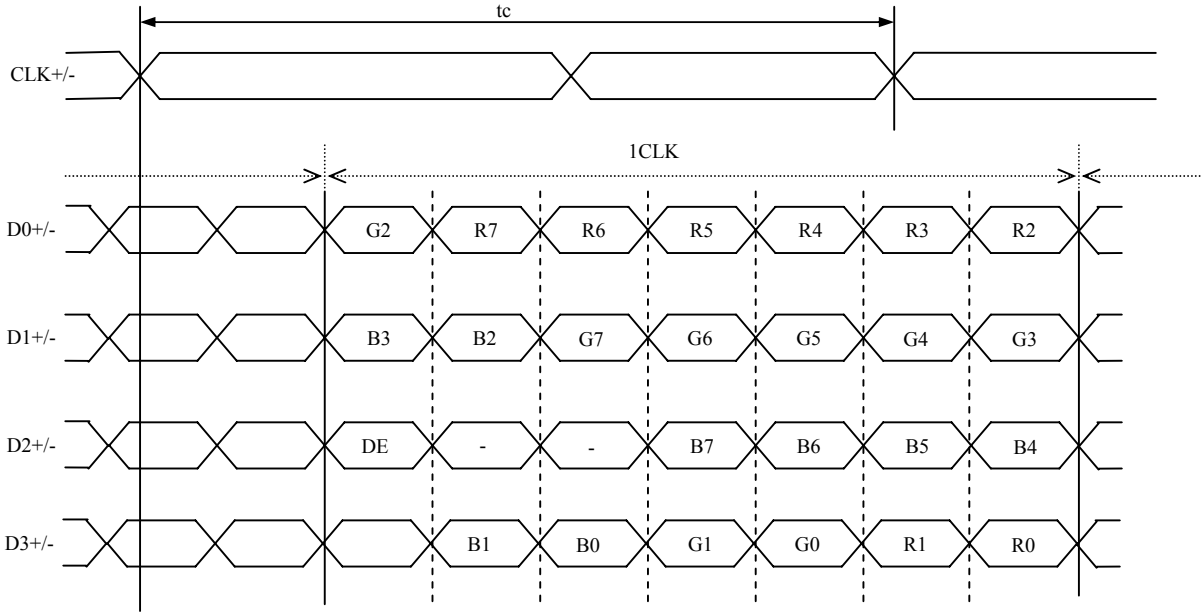

(2) Input data signal: 8bit, MAP B

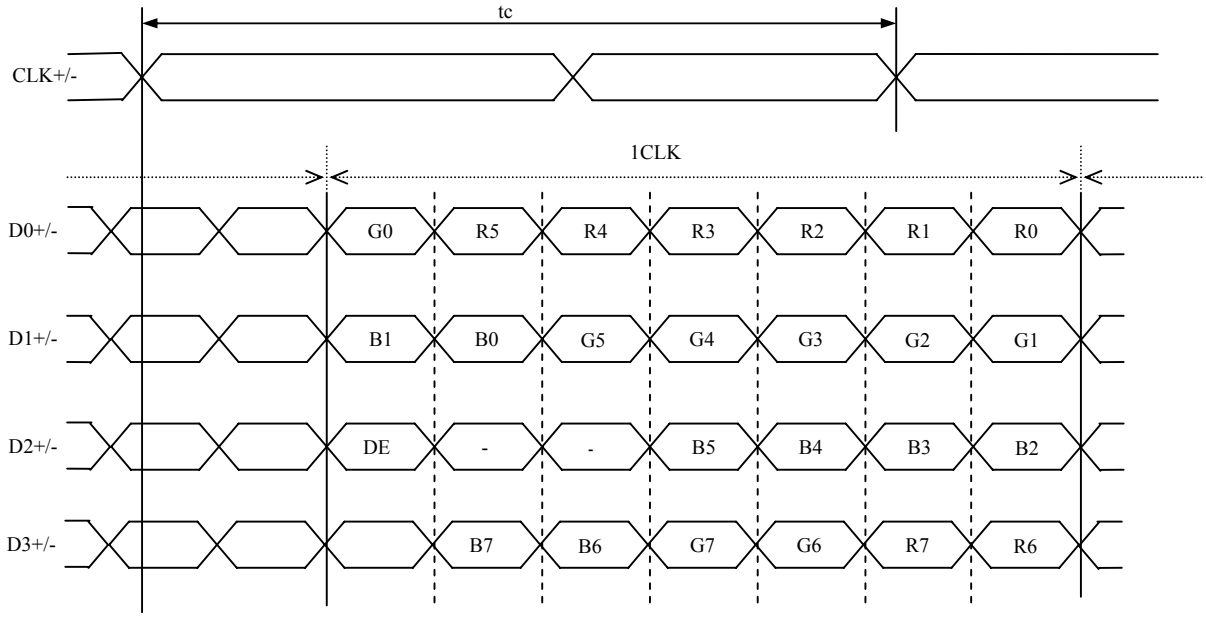

(3) Input data signal: 6bit

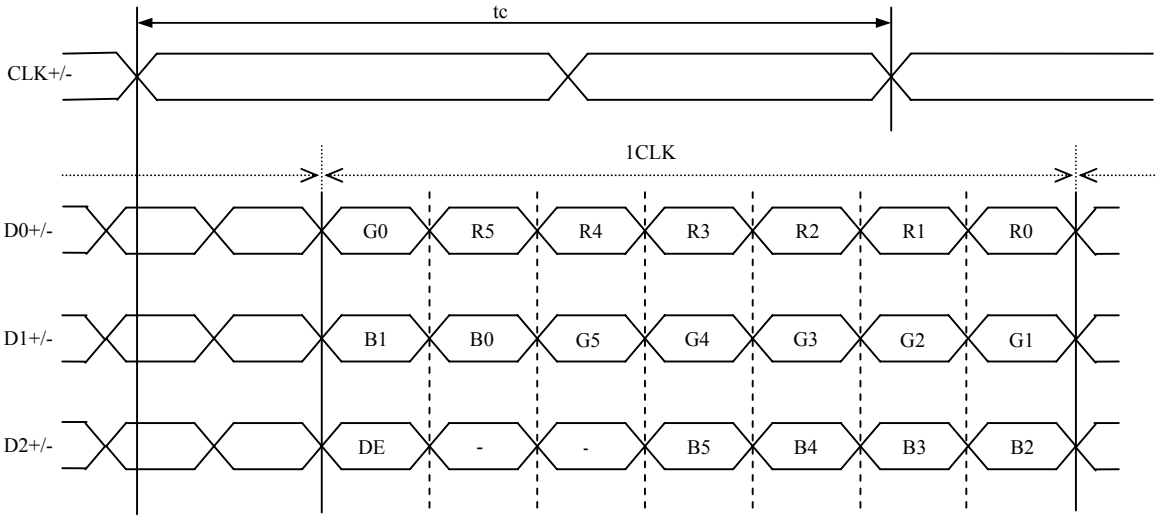

4.6 DISPLAY COLORS AND INPUT DATA SIGNALS

4.6.1 Combinations of input data signals, FRC and MSL signal ☆

This product can display 16,777,216 colors equivalent with 256 gray scales and 262,144 colors with 64 gray scales by combination of input data signals, FRC and MSL signal. See the following table. ☆

Combination	Input data signals	Input Data mapping	CN1- Pin No.16and 17	FRC terminal	MSL terminal	Display colors	Remarks
①	8 bit	Map A	D3+/-	High	Low	16,777,216	Note1
②	8 bit	Map B	D3+/-	High	High	16,777,216	Note1
③	6 bit	-	GND	Low or Open	Low	262,144	Note2

☆ ☆ ☆

Note1: See "**4.6.2 16,777,216 colors**".
Note2: See "**4.6.3 262,144 colors**".

4.6.2 16,777,216 colors

This product can display 16,777,216 colors equivalent with 256 gray scales by combination ① or ②. ☆
(See "**4.6.1 Combinations of input data signals, FRC and MSL signal**".)
Also the relation between display colors and input data signals is as follows.

Display colors		Data signal (0: Low level, 1: High level)																							
		R7	R6	R5	R4	R3	R2	R1	R0	G7	G6	G5	G4	G3	G2	G1	G0	B7	B6	B5	B4	B3	B2	B1	B0
Basic Colors	Black	0	0	0	0	0	0	0	0	0	0	0	0	0	0	0	0	0	0	0	0	0	0	0	0
	Blue	0	0	0	0	0	0	0	0	0	0	0	0	0	0	0	0	1	1	1	1	1	1	1	1
	Red	1	1	1	1	1	1	1	1	0	0	0	0	0	0	0	0	0	0	0	0	0	0	0	0
	Magenta	1	1	1	1	1	1	1	1	0	0	0	0	0	0	0	0	1	1	1	1	1	1	1	1
	Green	0	0	0	0	0	0	0	0	1	1	1	1	1	1	1	1	0	0	0	0	0	0	0	0
	Cyan	0	0	0	0	0	0	0	0	1	1	1	1	1	1	1	1	1	1	1	1	1	1	1	1
	Yellow	1	1	1	1	1	1	1	1	1	1	1	1	1	1	1	1	0	0	0	0	0	0	0	0
	White	1	1	1	1	1	1	1	1	1	1	1	1	1	1	1	1	1	1	1	1	1	1	1	1
Red gray scale	Black	0	0	0	0	0	0	0	0	0	0	0	0	0	0	0	0	0	0	0	0	0	0	0	0
		0	0	0	0	0	0	0	1	0	0	0	0	0	0	0	0	0	0	0	0	0	0	0	0
	dark	0	0	0	0	0	0	1	0	0	0	0	0	0	0	0	0	0	0	0	0	0	0	0	0
	↑					:								:								:			
	↓					:								:								:			
	bright	1	1	1	1	1	1	0	1	0	0	0	0	0	0	0	0	0	0	0	0	0	0	0	0
		1	1	1	1	1	1	1	0	0	0	0	0	0	0	0	0	0	0	0	0	0	0	0	0
	Red	1	1	1	1	1	1	1	1	0	0	0	0	0	0	0	0	0	0	0	0	0	0	0	0
Green gray scale	Black	0	0	0	0	0	0	0	0	0	0	0	0	0	0	0	0	0	0	0	0	0	0	0	0
		0	0	0	0	0	0	0	0	0	0	0	0	0	0	0	1	0	0	0	0	0	0	0	0
	dark	0	0	0	0	0	0	0	0	0	0	0	0	0	0	1	0	0	0	0	0	0	0	0	0
	↑					:								:								:			
	↓					:								:								:			
	bright	0	0	0	0	0	0	0	0	1	1	1	1	1	1	0	1	0	0	0	0	0	0	0	0
		0	0	0	0	0	0	0	0	1	1	1	1	1	1	1	0	0	0	0	0	0	0	0	0
	Green	0	0	0	0	0	0	0	0	1	1	1	1	1	1	1	1	0	0	0	0	0	0	0	0
Blue gray scale	Black	0	0	0	0	0	0	0	0	0	0	0	0	0	0	0	0	0	0	0	0	0	0	0	0
		0	0	0	0	0	0	0	0	0	0	0	0	0	0	0	0	0	0	0	0	0	0	0	1
	dark	0	0	0	0	0	0	0	0	0	0	0	0	0	0	0	0	0	0	0	0	0	0	1	0
	↑					:								:								:			
	↓					:								:								:			
	bright	0	0	0	0	0	0	0	0	0	0	0	0	0	0	0	0	1	1	1	1	1	1	0	1
		0	0	0	0	0	0	0	0	0	0	0	0	0	0	0	0	1	1	1	1	1	1	1	0
	Blue	0	0	0	0	0	0	0	0	0	0	0	0	0	0	0	0	1	1	1	1	1	1	1	1

4.6.3 262,144 colors

This product can display 262,144 colors with 64 gray scales by combination ③. ☆
(See "**4.6.1 Combinations of input data signals, FRC and MSL signal**".)
Also the relation between display colors and input data signals is as follows.

Display colors		Data signal (0: Low level, 1: High level)																	
		R5	R4	R3	R2	R1	R0	G5	G4	G3	G2	G1	G0	B5	B4	B3	B2	B1	B0
Basic colors	Black	0	0	0	0	0	0	0	0	0	0	0	0	0	0	0	0	0	0
	Blue	0	0	0	0	0	0	0	0	0	0	0	0	1	1	1	1	1	1
	Red	1	1	1	1	1	1	0	0	0	0	0	0	0	0	0	0	0	0
	Magenta	1	1	1	1	1	1	0	0	0	0	0	0	1	1	1	1	1	1
	Green	0	0	0	0	0	0	1	1	1	1	1	1	0	0	0	0	0	0
	Cyan	0	0	0	0	0	0	1	1	1	1	1	1	1	1	1	1	1	1
	Yellow	1	1	1	1	1	1	1	1	1	1	1	1	0	0	0	0	0	0
	White	1	1	1	1	1	1	1	1	1	1	1	1	1	1	1	1	1	1
Red gray scale	Black	0	0	0	0	0	0	0	0	0	0	0	0	0	0	0	0	0	0
		0	0	0	0	0	1	0	0	0	0	0	0	0	0	0	0	0	0
	dark	0	0	0	0	1	0	0	0	0	0	0	0	0	0	0	0	0	0
	↑				:						:						:		
	↓				:						:						:		
	bright	1	1	1	1	0	1	0	0	0	0	0	0	0	0	0	0	0	0
		1	1	1	1	1	0	0	0	0	0	0	0	0	0	0	0	0	0
	Red	1	1	1	1	1	1	0	0	0	0	0	0	0	0	0	0	0	0
Green gray scale	Black	0	0	0	0	0	0	0	0	0	0	0	0	0	0	0	0	0	0
		0	0	0	0	0	0	0	0	0	0	0	1	0	0	0	0	0	0
	dark	0	0	0	0	0	0	0	0	0	0	1	0	0	0	0	0	0	0
	↑				:						:						:		
	↓				:						:						:		
	bright	0	0	0	0	0	0	1	1	1	1	0	1	0	0	0	0	0	0
		0	0	0	0	0	0	1	1	1	1	1	0	0	0	0	0	0	0
	Green	0	0	0	0	0	0	1	1	1	1	1	1	0	0	0	0	0	0
Blue gray scale	Black	0	0	0	0	0	0	0	0	0	0	0	0	0	0	0	0	0	0
		0	0	0	0	0	0	0	0	0	0	0	0	0	0	0	0	0	1
	dark	0	0	0	0	0	0	0	0	0	0	0	0	0	0	0	0	1	0
	↑				:						:						:		
	↓				:						:						:		
	bright	0	0	0	0	0	0	0	0	0	0	0	0	1	1	1	1	0	1
		0	0	0	0	0	0	0	0	0	0	0	0	1	1	1	1	1	0
	Blue	0	0	0	0	0	0	0	0	0	0	0	0	1	1	1	1	1	1

4.7 DISPLAY POSITIONS

The following table is the coordinates per pixel (See "**4.8 SCANNING DIRECTIONS**".).

C (0, 0)

R	G	B

C(0, 0)	C(1, 0)	• • •	C(X, 0)	• • •	C(1022, 0)	C(1023, 0)
C(0, 1)	C(1, 1)	• • •	C(X, 1)	• • •	C(1022, 1)	C(1023, 1)
• • •	• • •	• • •	• • •	• • •	• • •	• • •
C(0, Y)	C(1, Y)	• • •	C(X, Y)	• • •	C(1022, Y)	C(1023, Y)
• • •	• • •	• • •	• • •	• • •	• • •	• • •
C(0, 598)	C(1, 598)	• • •	C(X, 598)	• • •	C(1022, 598)	C(1023, 598)
C(0, 599)	C(1, 599)	• • •	C(X, 599)	• • •	C(1022, 599)	C(1023, 599)

4.8 SCANNING DIRECTIONS

The following figures are seen from a front view. ☆

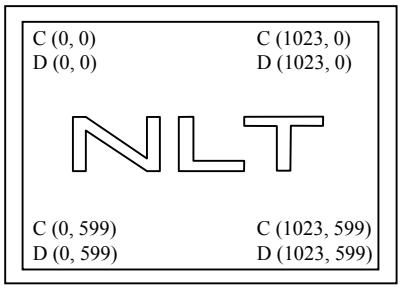

Note1 ☆

Figure1. Normal Scan (DPS: Low or Open)

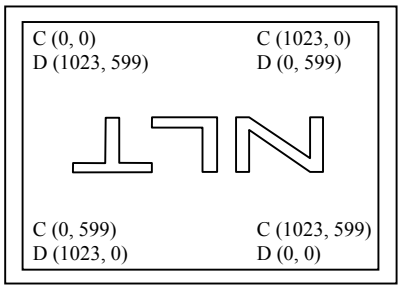

Note1 ☆

Figure2. Reverse Scan (DPS: High)

Note1: Meaning of C (X, Y) and D (X, Y)
C (X, Y): The coordinates of the display position (See "**4.7 DISPLAY POSITIONS**".)
D (X, Y): The data number of input signal for LCD panel signal processing board

4.9 INPUT SIGNAL TIMINGS

4.9.1 Outline of input signal timings

- Horizontal signal

Note1

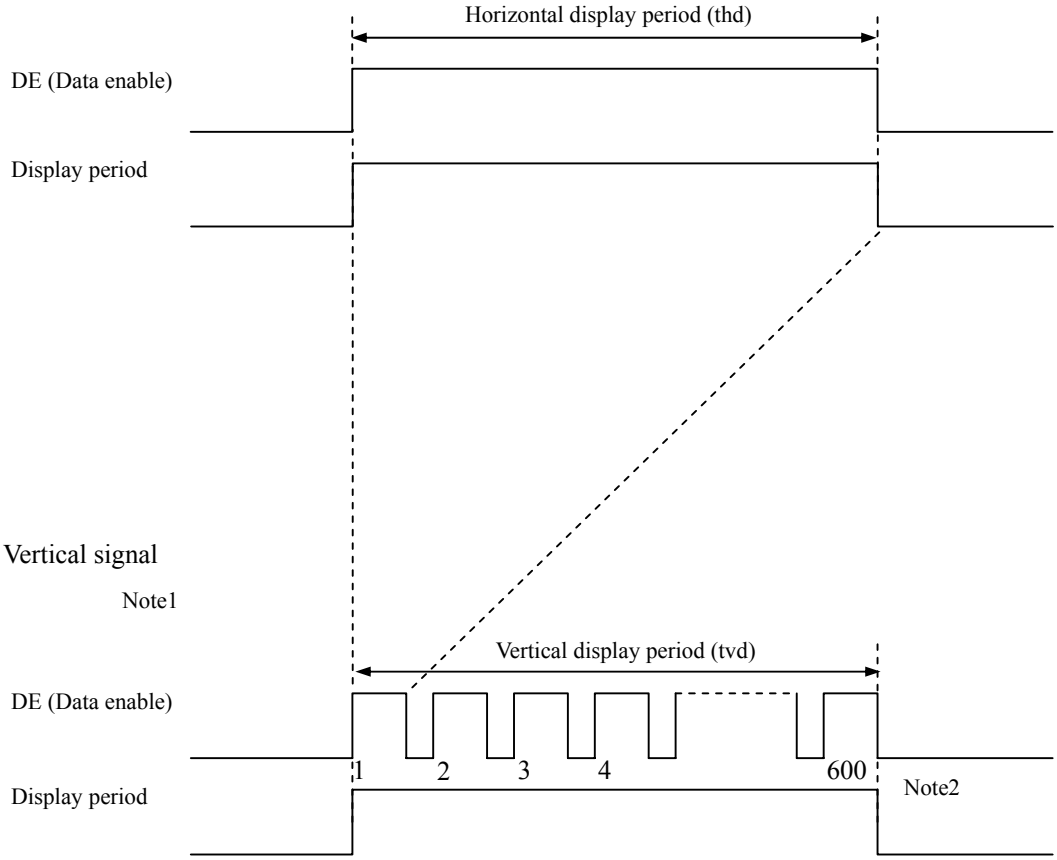

- Vertical signal

Note1

Note1: This diagram indicates virtual signal for set up to timing.
Note2: See "**4.9.3 Input signal timing chart**" for the pulse number. ☆

4.9.2 Timing characteristics

(Note1, Note2, Note3)

Parameter			Symbol	min.	typ.	max.	Unit	Remarks
CLK	Frequency		1/tc	48.0	50.4	52.6	MHz	19.841 ns (typ.)
	Duty		-	-			-	-
	Rise time, Fall time		-				ns	
DATA	CLK-DATA	Setup time	-	-			ns	-
		Hold time	-				ns	
	Rise time, Fall time		-				ns	
DE	Horizontal	Cycle	th	25.10	26.667	28.0	μs	37.5 kHz (typ.)
				1,320	1,344	-	CLK	
		Display period	thd	1,024			CLK	
	Vertical (One frame)	Cycle	tv	15.3	16.667	17.5	ms	60.0 Hz (typ.)
				610	625	-	H	
		Display period	tvd	600			H	
	CLK-DE	Setup time	-	-			ns	-
		Hold time	-				ns	
	Rise time, Fall time		-				ns	

Note1: Definition of parameters is as follows.
tc= 1CLK, th= 1H
Note2: See the data sheet of LVDS transmitter.
Note3: Vertical cycle (tv) should be specified in integral multiple of Horizontal cycle (th).

4.9.3 Input signal timing chart

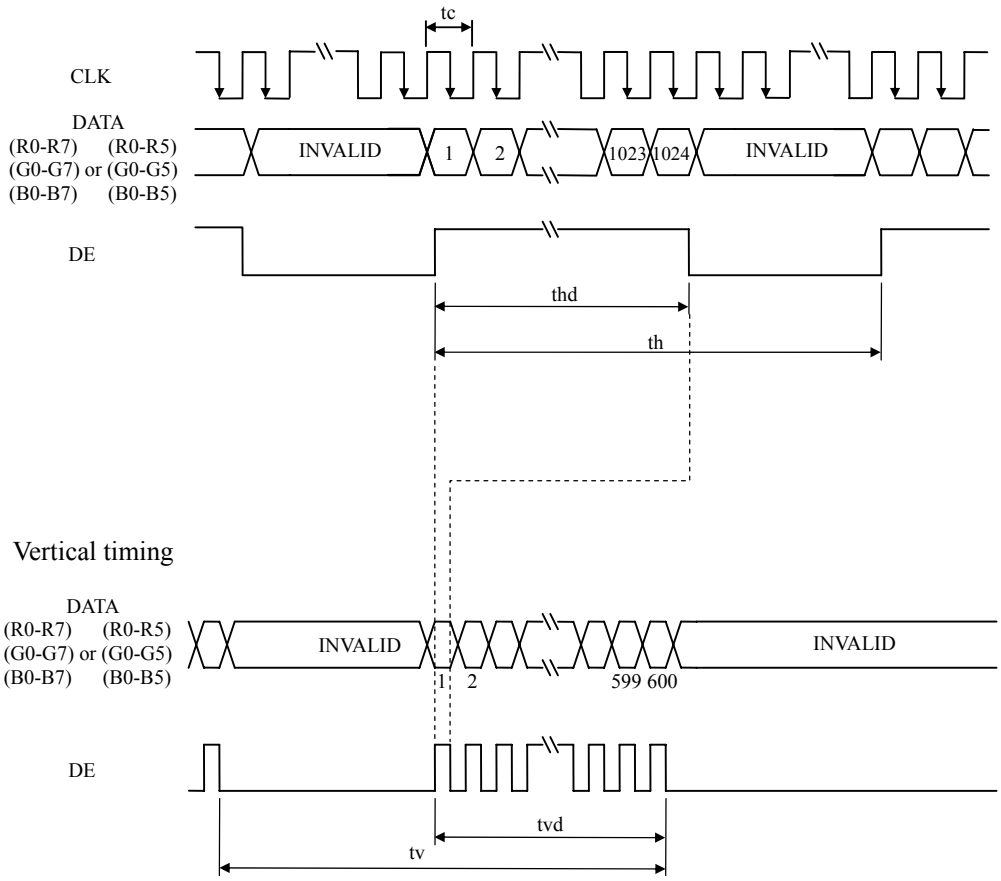

4.10 OPTICS

4.10.1 Optical characteristics

(Note1, Note2)

Parameter		Condition	Symbol	min.	typ.	max.	Unit	Measuring instrument	Remarks
Luminance		White at center θR= 0°, θL= 0°, θU= 0°, θD= 0°	L	210	300	-	cd/m^2	BM-5A	-
Contrast ratio		White/Black at center θR= 0°, θL= 0°, θU= 0°, θD= 0°	CR	400	700	-	-	BM-5A	Note3
Luminance uniformity		White θR= 0°, θL= 0°, θU= 0°, θD= 0°	LU	-	1.25	1.4	-	BM-5A	Note4
Chromaticity	White	**x** coordinate	Wx	0.263	0.313	0.363	-	SR-3	Note5
		y coordinate	Wy	0.279	0.329	0.379	-		
	Red	**x** coordinate	Rx	-	0.633	-	-		
		y coordinate	Ry	-	0.357	-	-		
	Green	**x** coordinate	Gx	-	0.333	-	-		
		y coordinate	Gy	-	0.595	-	-		
	Blue	**x** coordinate	Bx	-	0.139	-	-		
		y coordinate	By	-	0.116	-	-		
Color gamut		θR= 0°, θL= 0°, θU= 0°, θD= 0° at center, against NTSC color space	C	55	60	-	%		
Response time		Black to White	Ton	-	10	15	ms	BM-5A	Note6 Note7
		White to Black	Toff	-	15	20	ms		
Viewing angle	Right	θU= 0°, θD= 0°, CR≥ 10	θR	70	88	-	°	EZ Contrast	Note8
	Left	θU= 0°, θD= 0°, CR≥ 10	θL	70	88	-	°		
	Up	θR= 0°, θL= 0°, CR≥ 10	θU	70	88	-	°		
	Down	θR= 0°, θL= 0°, CR≥ 10	θD	70	88	-	°		

Note1: These are initial characteristics.
Note2: Measurement conditions are as follows.
Ta= 25°C, VCC= 3.3V, IL= 15mA/One circuit, Display mode: WSVGA, ☆
Horizontal cycle= 1/37.5kHz, Vertical cycle= 1/60.0Hz, DPS= Low or Open: Normal scan

Optical characteristics are measured at luminance saturation 20minutes after the product ☆
works in the dark room. Also measurement methods are as follows.

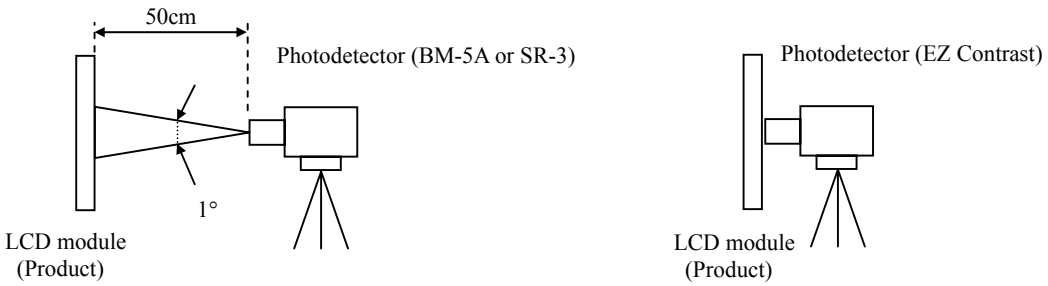

Note3: See "**4.10.2 Definition of contrast ratio**".
Note4: See "**4.10.3 Definition of luminance uniformity**".
Note5: These coordinates are found on CIE 1931 chromaticity diagram.
Note6: Product surface temperature: TopF= 28°C
Note7: See "**4.10.4 Definition of response times**".
Note8: See "**4.10.5 Definition of viewing angles**".

4.10.2 Definition of contrast ratio

The contrast ratio is calculated by using the following formula.

$$\text{Contrast ratio (CR)} = \frac{\text{Luminance of white screen}}{\text{Luminance of black screen}}$$

4.10.3 Definition of luminance uniformity

The luminance uniformity is calculated by using following formula.

$$\text{Luminance uniformity (LU)} = \frac{\text{Maximum luminance from ① to ⑤}}{\text{Minimum luminance from ① to ⑤}}$$

The luminance is measured at near the 5 points shown below.

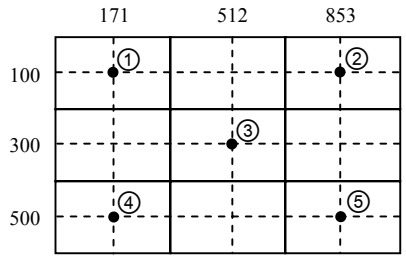

4.10.4 Definition of response times

Response time is measured at the time when the luminance changes from "black" to "white", or "white" to "black" on the same screen point, by photo-detector. Ton is the time when the luminance changes from 10% up to 90%. Also Toff is the time when the luminance changes from 90% down to 10% (See the following diagram.). ☆

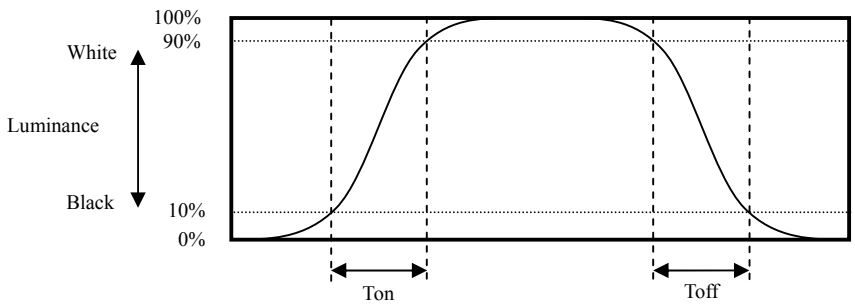

4.10.5 Definition of viewing angles

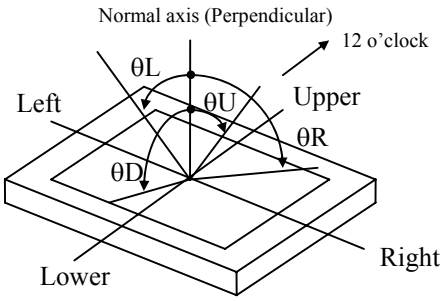

5. ESTIMATED LUMINANCE LIFETIME

The luminance lifetime is the time from initial luminance to half-luminance.

This lifetime is the estimated value, and is not guarantee value.

Condition		Estimated luminance lifetime (Life time expectancy) Note1, Note2, Note3	Unit
LED elementary substance	25°C (Ambient temperature of LED) Continuous operation, IL= 15mA/One circuit	30,000	h

Note1: Life time expectancy is mean time to half-luminance.
Note2: Estimated luminance lifetime is not the value for an LCD module but the value for LED elementary substance.
Note3: By ambient temperature, the lifetime changes particularly. Especially, in case the product works under high temperature environment, the lifetime becomes short.

6. RELIABILITY TESTS

Test item	Condition	Judgment Note1
High temperature and humidity (Operation)	① 60 ± 2°C, RH= 90%, 240hours ② Display data is white.	No display malfunctions
High temperature (Operation)	① 70 ± 3°C, 240hours ② Display data is white.	
Heat cycle (Operation)	① -20 ± 3°C…1hour 70 ± 3°C…1hour ② 50cycles, 4 hours/cycle ③ Display data is white.	
Thermal shock (Non operation)	① -30 ± 3°C…30minutes 80 ± 3°C…30minutes ② 100cycles, 1hour/cycle ③ Temperature transition time is within 5 minutes.	
ESD (Operation)	① 150pF, 150Ω, ±10kV ② 9 places on a panel surface Note2 ③ 10 times each places at 1 sec interval	
Dust (Operation)	① Sample dust: No. 15 (by JIS-Z8901)) ② 15 seconds stir ③ 8 times repeat at 1 hour interval	
Vibration (Non operation)	① 5 to 100Hz, 19.6m/s^2 ② 1 minute/cycle ③ X, Y, Z directions ④ 120 times each directions	No display malfunctions No physical damages
Mechanical shock (Non operation)	① 539m/ s^2, 11ms ② ±X, ±Y, ±Z directions ③ 5 times each directions	

Note1: Display and appearance are checked under environmental conditions equivalent to the inspection conditions of defect criteria.
Note2: See the following figure for discharge points.

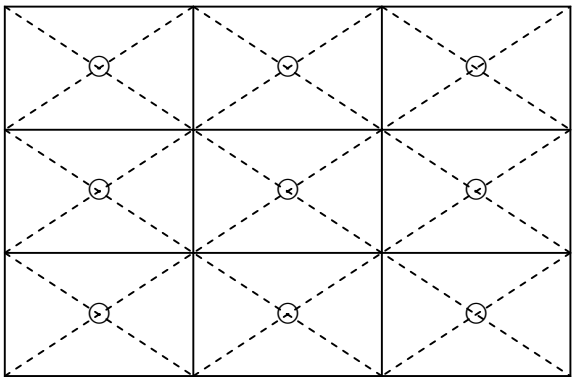

7. PRECAUTIONS

7.1 MEANING OF CAUTION SIGNS

The following caution signs have very important meaning. **Be sure to read "7.2 CAUTIONS" and "7.3 ATTENTIONS"!** ☆

⚠	This sign has the meaning that a customer will be injured or the product will sustain damage if the customer practices wrong operations. ☆
✋	This sign has the meaning that a customer will be injured if the customer practices wrong operations. ☆

7.2 CAUTIONS

✋

- **Do not shock and press the LCD panel and the backlight! There is a danger of breaking, because they are made of glass. (Shock: Equal to or no greater than 539m/s^2 and equal to or no greater than 11ms, Pressure: Equal to or no greater than 19.6 N (ϕ16mm jig))** ☆

7.3 ATTENTIONS ⚠

7.3.1 Handling of the product

① Take hold of both ends without touching the circuit board when the product (LCD module) is picked up from inner packing box to avoid broken down or misadjustment, because of stress to mounting parts on the circuit board.
② When the product is put on the table temporarily, display surface must be placed downward.
③ When handling the product, take the measures of electrostatic discharge with such as earth band, ionic shower and so on, because the product may be damaged by electrostatic.
④ The product must be installed using mounting holes without undue stress such as bends or twist (See outline drawings). And do not add undue stress to any portion (such as bezel flat area). Bends or twist described above and undue stress to any portion may cause display mura. ☆
⑤ Do not press or rub on the sensitive product surface. When cleaning the product surface, wipe it with a soft dry cloth.
⑥ Do not push or pull the interface connectors while the product is working.
⑦ When handling the product, use of an original protection sheet on the product surface (polarizer) is recommended for protection of product surface. Adhesive type protection sheet may change color or characteristics of the polarizer.
⑧ Usually liquid crystals don't leak through the breakage of glasses because of the surface tension of thin layer and the construction of LCD panel. But, if you contact with liquid crystal by any chance, please wash it away with soap and water. ☆

7.3.2 Environment

① Do not operate or store in high temperature, high humidity, dewdrop atmosphere or corrosive gases. Keep the product in packing box with antistatic pouch in room temperature to avoid dusts and sunlight, when storing the product.
② In order to prevent dew condensation occurred by temperature difference, the product packing box must be opened after enough time being left under the environment of an unpacking room. Evaluate the storage time sufficiently because dew condensation is affected by the environmental temperature and humidity. (Recommended leaving time: 6 hours or more with the original packing state after a customer receives the package) ☆
③ Do not operate in high magnetic field. If not, circuit boards may be broken. ☆
④ This product is not designed as radiation hardened.

7.3.3 Characteristics

The following items are neither defects nor failures.

① Characteristics of the LCD (such as response time, luminance, color uniformity and so on) may be changed depending on ambient temperature. If the product is stored under condition of low temperature for a long time, it may cause display mura. In this case, the product should be operated after enough time being left under condition of operating temperature.
② Display mura, flickering, vertical streams or tiny spots may be observed depending on display patterns. ☆
③ Do not display the fixed pattern for a long time because it may cause image sticking. Use a screen saver, if the fixed pattern is displayed on the screen.
④ The display color may be changed depending on viewing angle because of the use of condenser sheet in the backlight.
⑤ Optical characteristics may be changed depending on input signal timings.

7.3.4 Others

① All GND and VCC terminals should be used without any non-connected lines.
② Do not disassemble a product or adjust variable resistors.
③ See "REPLACEMENT MANUAL FOR LAMP HOLDER SET", when replacing lamp holder set. ☆
④ Pack the product with the original shipping package, in order to avoid any damages during transportation, when returning the product to NLT for repairing and so on. ☆
⑤ The information of China RoHS directive six hazardous substances or elements in this product is as follows.

China RoHS directive six l hazardous substances or elements					
Lead (Pb)	Mercury (Hg)	Cadmium (Cd)	Hexavalent Chromium (Cr VI)	Polybrominated Biphenys (PBB)	Polybrominated Biphenyl Ethers (PBDE)
×	○	○	○	○	○

Note1: ○: This indicates that the poisonous or harmful material in all the homogeneous materials for this part is equal or below the limitation level of SJ/T11363-2006 standard regulation.
×: This indicates that the poisonous or harmful material in all the homogeneous materials for this part is above the limitation level of SJ/T11363-2006 standard regulation.

8. OUTLINE DRAWINGS

8.1 FRONT VIEW

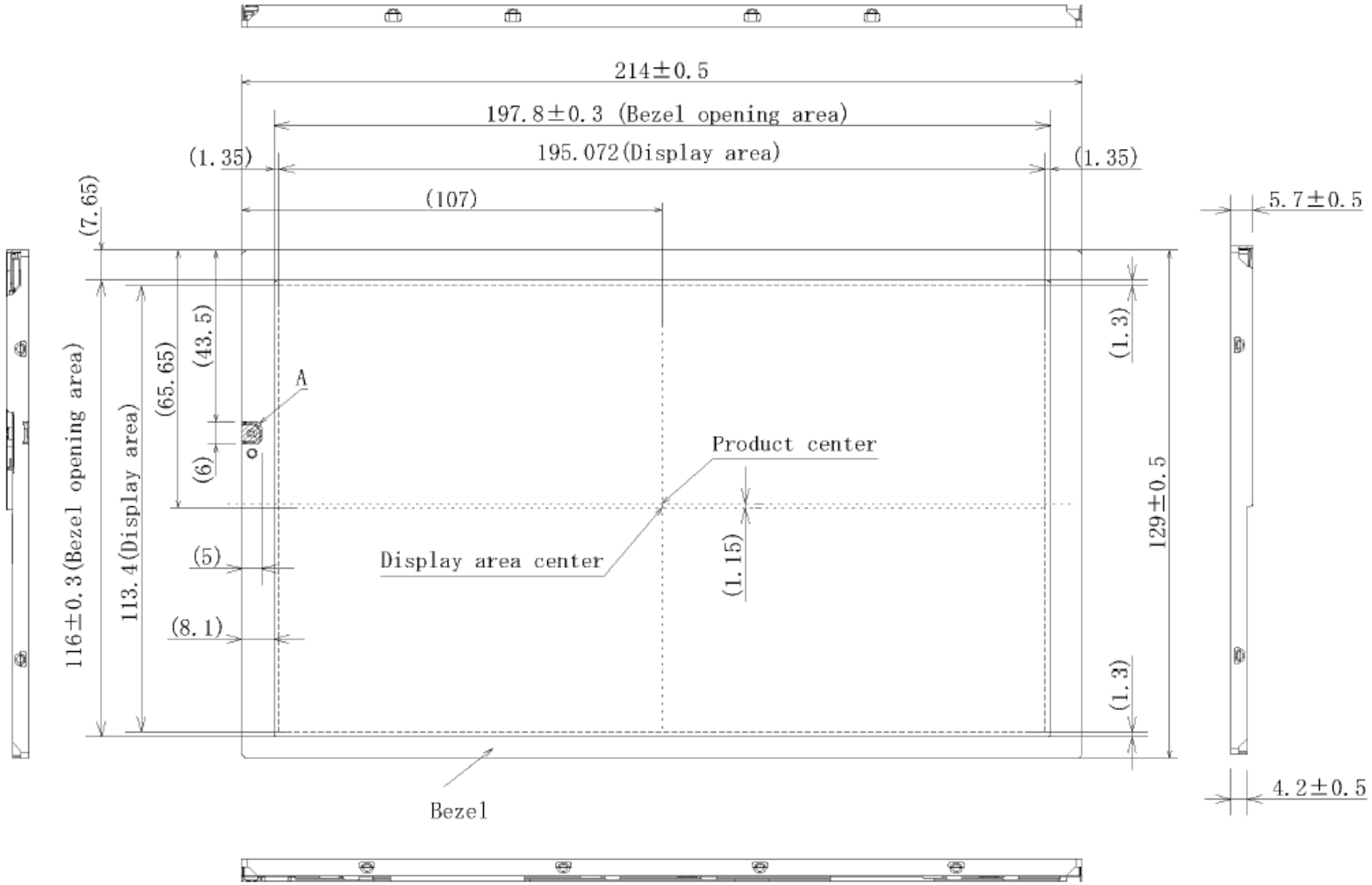

Note1: The values in parentheses are for reference.
Note2: When installing the product to customer equipment, please press Bezel (including outline, excluding A) equally.

Unit: mm

8.2 REAR VIEW

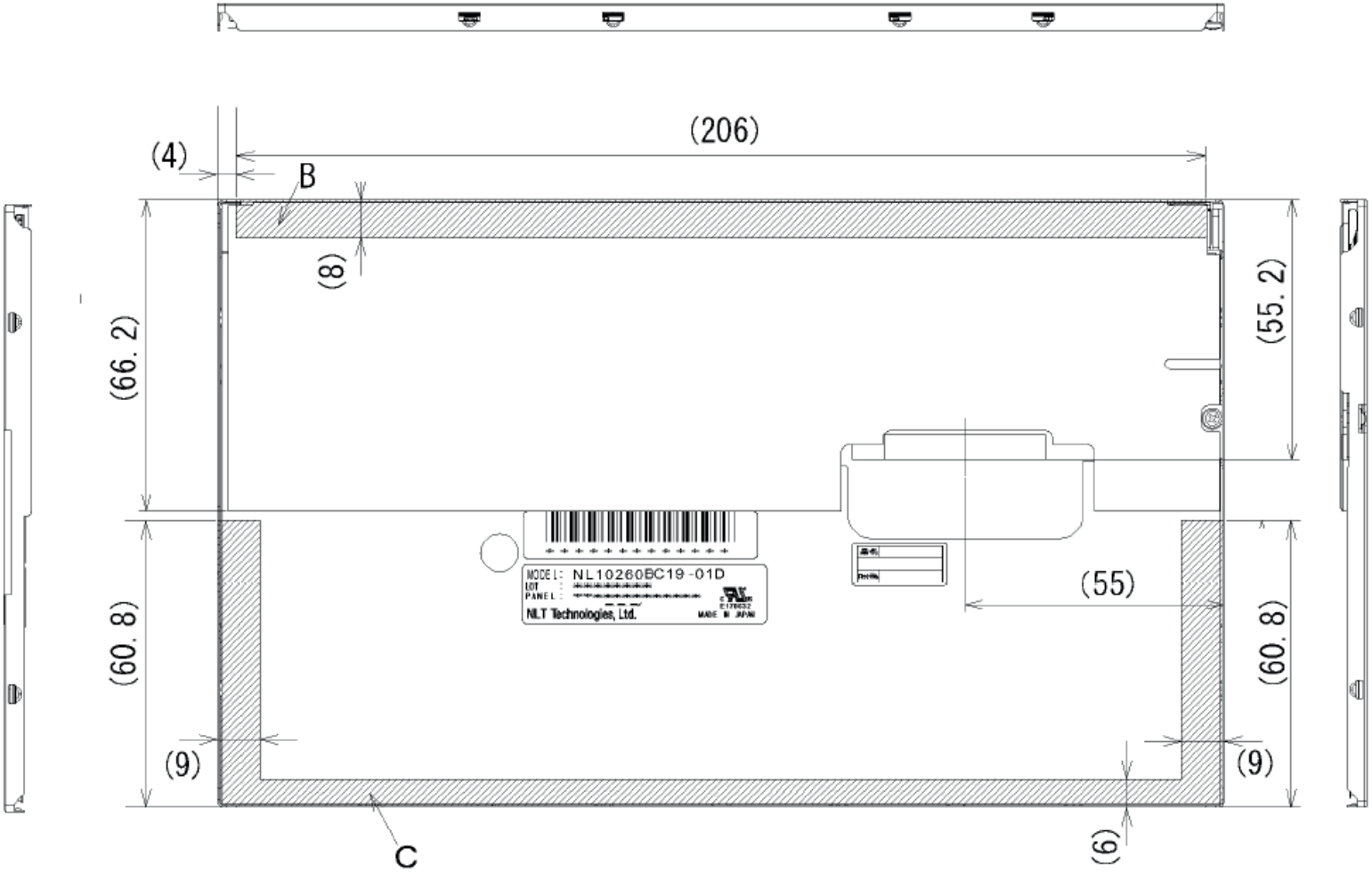

Note1: The values in parentheses are for reference.
Note2: When installing the product to customer equipment, please press "B" and "C" equally.

Unit: mm