LCD MODULE

CUSTOMER:	
MODEL NO:	**VA-G243251-7CTLWB**
ACCEPTED BY:	

APPROVED BY:	CHECKED BY:	ORGANIZED BY:

■**Approval for Specifications Only**

□**Approval for Specifications and Sample**

Note: 1. Version of Specifications : 1

2. Others: Rohs

Version	Date	Contents
1	06/05/26	Initial Release

CONTENTS

1. Module Numbering System

2. Mechanical Specification

3. Absolute Maximum Ratings

4. Electrical Characteristics

5. Optical Characteristics

6. Interface

7.Block Diagram

8. Recommend Power Supply Circuit

9.Timing Characteristics

10.Backlight

11. Packing Method

1.Module Numbering System:

V C - B 1601 01 – 1 T F L Y A

Serial No:A~Z

Backlight Color:
N:Without Backlight;
A:Amber;**B:**Blue;**G:**Green;
L:Yellow;**O:**Orange;**R:**Red;
Y:Yellow Green;**W:**White

Backlight Type:
N:Without Backlight;
E:EL; **F:**CCFL; **L:**LED; **P:**LAMP

LCD Type:
R: Reflective/Positive;
S: Reflective/Negative
F: Transflective/Positive
G:Transflective/Negative
U:Transmissive/Positive
T:Transmissive/Negative
N:Others

LCD Model:
T:TN; **H:**HTN; **G:**STN Gray; **E:**ECB
Y:STN Yellow;**B:**STN Blue; **W:**FSTN
Black/White; **C:**Color STN; **N**:Others

Temperature Range & View Direction:
General Purpose: **1:**6H **2:**12H **3:**3H **4:**9H
5: Others
High Performance: **6:**6H **7:**12H **8:**3H **9:**9H
0: Others

LCM Type:
01~49 : Standard LCM
51~99 : Customer Design LCM

Display Function:
Segment Number/Characters Lines/Row and Column Dots

Package Type:
B:COB; **F:**COF; **G:**COG; **H:**Heat Seal; **O:**Others; **S:**SMT; **T:**TAB

Display Type:
C:Character Type; **G:**Graphic Type; **S:**Segment Type; **A:** α -Si; **P:** PLED
L: OLED; **O:** Others

2.Mechanical Specification:

Item	Standard Value	Unit
Display Size	2.2	Inch
Module Dimension	69.24(H)*46.2(W)*2.4(D)	mm
Active Area	33.48(W)*44.64(H)	mm
Viewing Area	37.00(W)*49.56(H)	mm
Number of Dots	240RGB*320Dots	Dot
Pixel Pitch	0.195(W)*0.195(H)	mm
LCD Type	TFT/ Transmissive/Negative	-
Viewing Direction	12H	-
Driver	HX8312	-
Approx. Weight	12	g
Various color Display	262K (Red-5bit,Green-6bit,Blue-5bit 16-bit 80interface)	K
Backlight Type	3-LED parallel	
Backlight Color	white	

PIN DESCRIPTION

1	NC
2	NC
3	NC
4	NC
5	GND
6	GND
7	VDD
8	VDD
9	CS
10	RS
11	WR
12	RD
13	DB0
14	DB1
15	DB2
16	DB3
17	DB4
18	DB5
19	DB6
20	DB7
21	DB8
22	DB9
23	DB10
24	DB11
25	DB12
26	DB13
27	DB14
28	DB15
29	RESET
30	IM0
31	LED-A
32	LED-K
33	NC

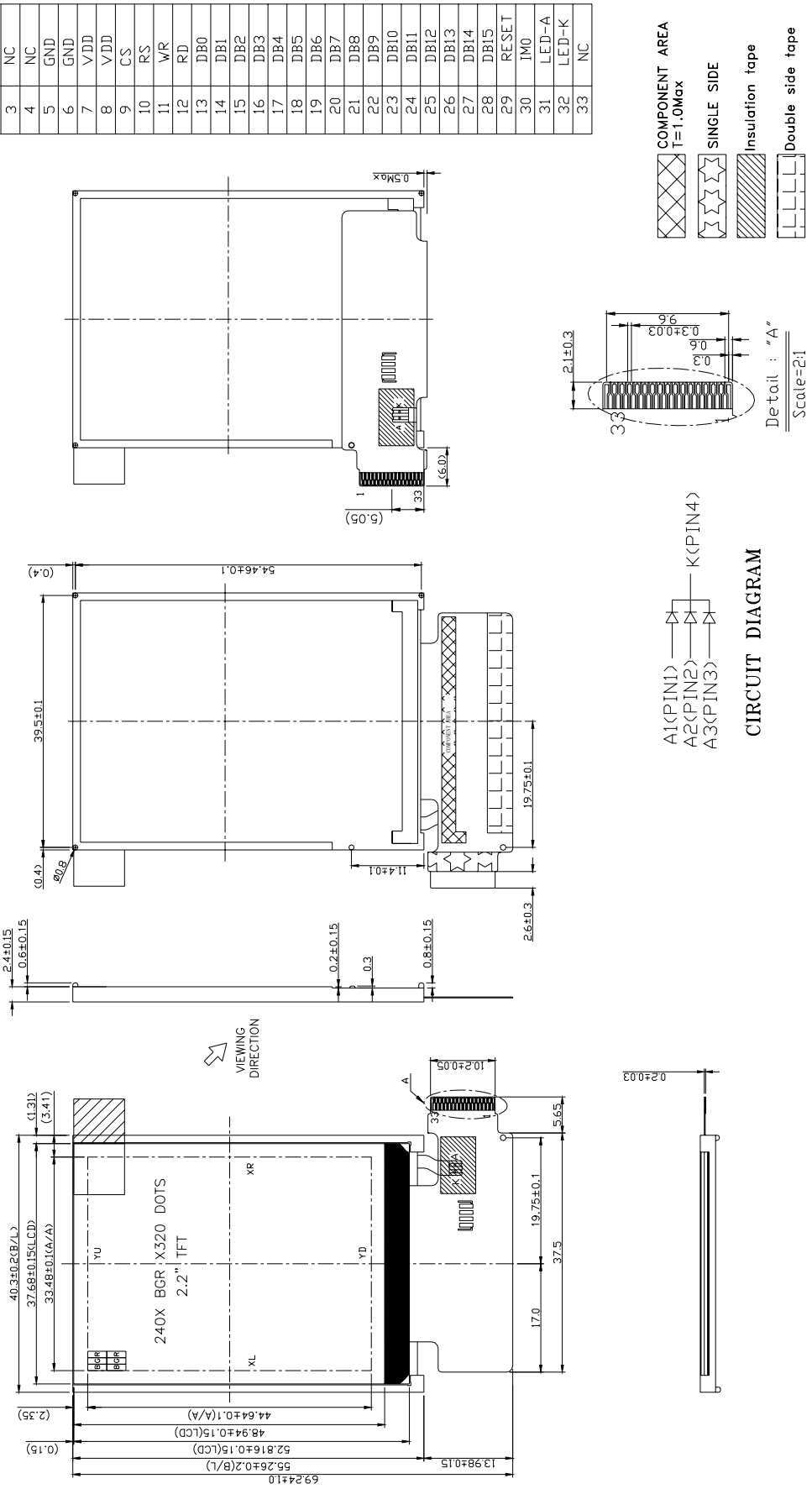

3.Absolute Maximum Ratings:

Item	Symbol	Min.	Typ.	Max.	Unit	Remark
Supply Voltage for Logic	V_{DD}	-0.3		+4.6	V	
Input voltage	Vin	-0.5		VDD+0.5	V	
Operating Temperature	T_{OP}	-20	-	+60	℃	-
Storage Temperature	T_{ST}	-30	-	+70	℃	-

*NOTE: Based on Vss=0V.

4.Electrical Characteristics:

Item	Symbol	Condition	Min.	Typ.	Max.	Unit
Supply Voltage for Logic	V_{DD}	Ta=25℃	2.5	2.8	3.3	V
High-level input voltage	VIHC	VDD=2.8V	0.8VDD		VDD	
Low-level input voltage	VILC	VDD=2.8V	0		0.2VDD	
TFT Gate ON Voltage	V_{GH}	VDD=2.8V	--	15	--	-
TFT Gate OFF Voltage	VGL	VDD=2.8V	--	-10	--	V
Power Supply Current for V_{DD}	I_{DD}	VDD=2.8V	-	4.5	6	mA

5. Optical Characteristics:

Parameter	Symbo	Values			Unit	Notes
		Min	Typ	Max		
Transmittance	T(%)	-	0.75	-	%	Fig.1
Contrast Ratio	C/R	150	200	-	-	-
Response time	Tr	-	15	30	ms	Fig.3
Response time	Tf	-	30	50	ms	Fig.3
CIE Color coordinate	Rx	0.615	0.645	0.675	-	Fig.1
	Ry	0.343	0.373	0.403	-	
	Gx	0.307	0.337	0.367	-	
	Gy	0.563	0.593	0.623	-	
	Bx	0.133	0.163	0.193	-	
	By	0.150	0.180	0.210	-	
	Wx	0.309	0.339	0.369	-	
	Wy	0.350	0.380	0.410	-	
*1) Viewing angle	Θl	-	35	-	Degree	C/R>10 Fig.4
	Θr	-	15	-		
	Θu	-	45	-		
	Θd	-	45	-		

Notes :

1. Contrast Ratio(CR) is defined mathematically as :

$$\text{Contrast Ratio} = \frac{\text{Surface Luminance with all white pixels}}{\text{Surface Luminance with all black pixels}}$$

2. Surface luminance is the center point across the LCD surface 500mm from the surface with all pixels displaying white. For more information see FIG 1.
3. Response time is the time required for the display to transition from to black(Rise Time, Tr_R) and from black to white(Decay Time, Tr_D). For additional information see FIG 3.
4. Viewing angle is the angle at which the contrast ratio is greater than 10. The angles are determined for the horizontal or x axis and the vertical or y axis with respect to the z axis which is normal to the LCD surface. For more information see FIG 5.
5. Optimum contrast is obtained by adjusting the LCD Threshold voltage(Vth & Vsat)

FIG. 1 Optical Characteristic Measurement Equipment and Method

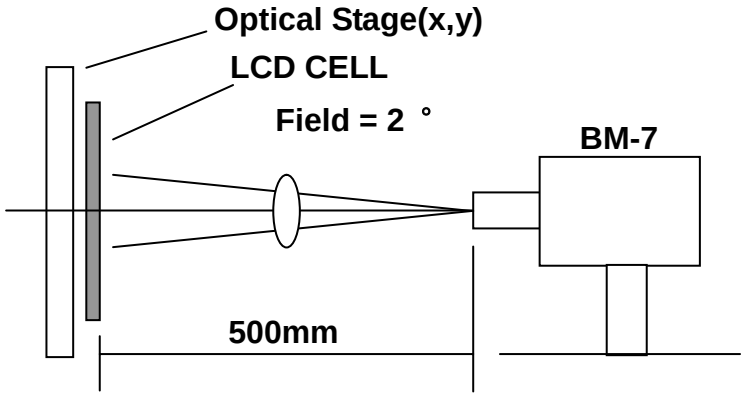

<Transmissive Mode>

FIG. 2 The definition of Vth and Vsat

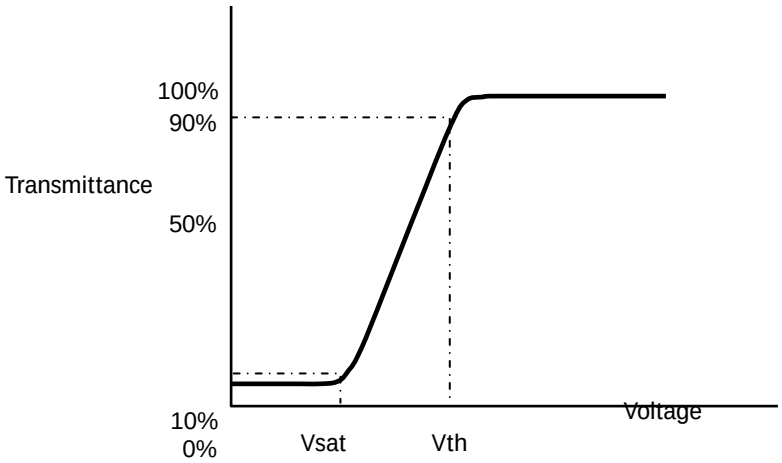

FIG. 3 The definition of Response Time

The response time is defined as the following figure and shall be measured by switching the input signal for “black” and “white”.

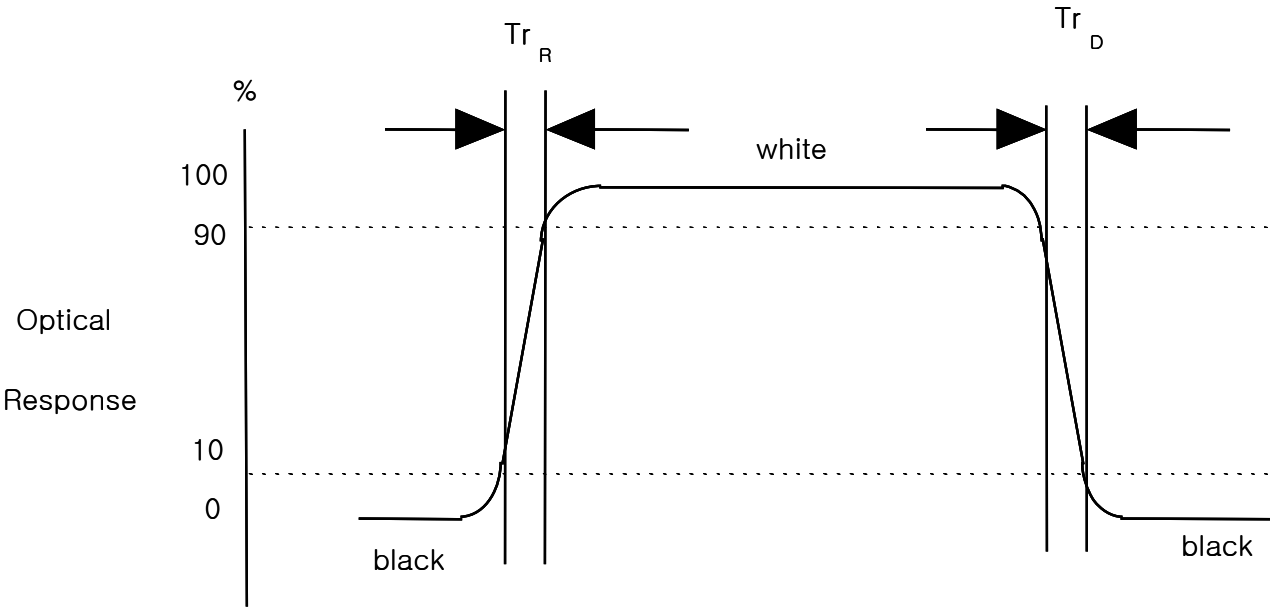

FIG. 4 The definition of viewing angle

<dimension of viewing angle range>

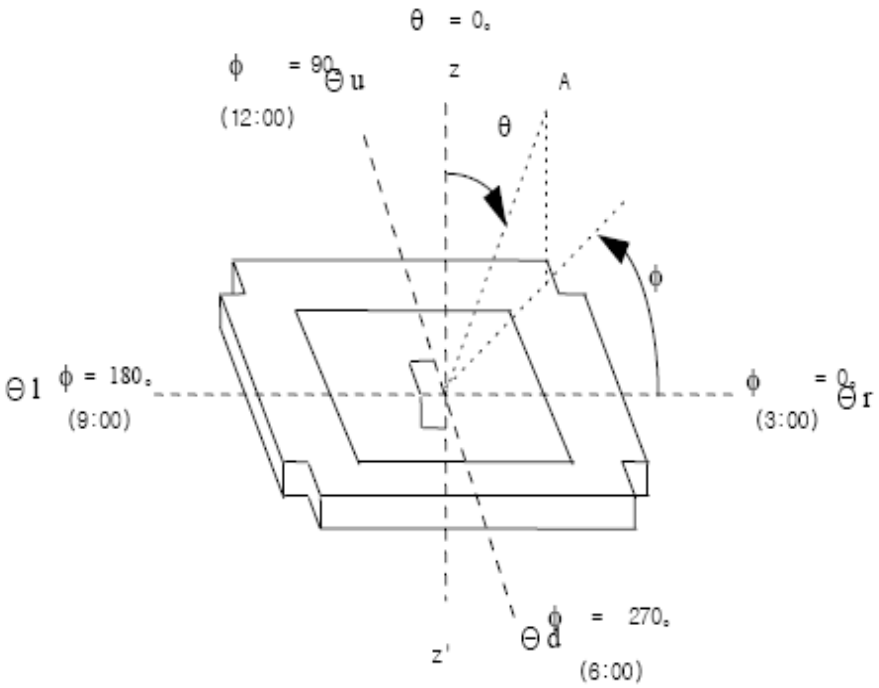

6. Interface:

No.	Symbol	Function
1	YU	NC
2	XL	NC
3	YD	NC
4	XR	NC
5	GND	Ground
6	GND	Ground
7	VDD	Power Input PIN
8	VDD	Power Input PIN
9	CS	Chip Select Input PIN / Write Data Select Input PIN
10	RS	Register Select Input PIN
11	WR	Write Data Select Input PIN
12	RD	Read Data Select Input PIN
13-28	DB0—DB15	Data Input/Output PIN
29	RESET	Chip reset Select Input PIN
30	IM0	NC
31	LED_A	B/L Power Input anode
32	LED_K	B/L Power Input Cathode
33	NC	NC

7. **Block Diagram:**

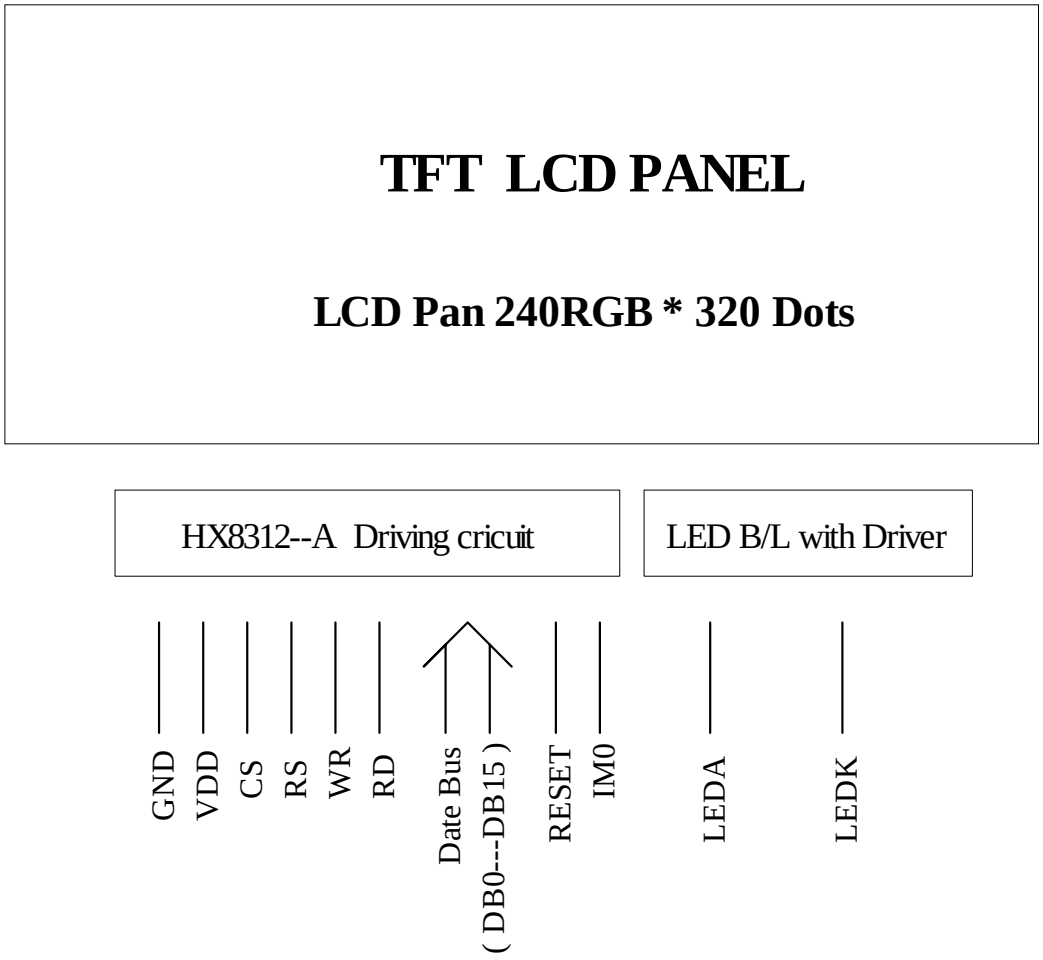

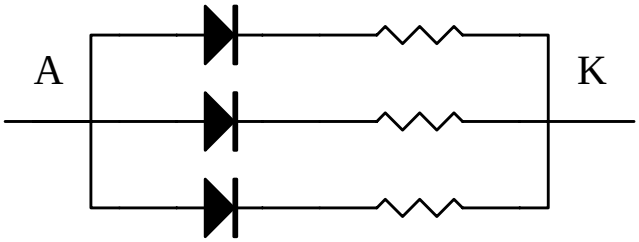

8.Timing Control:

80-system Bus Operation

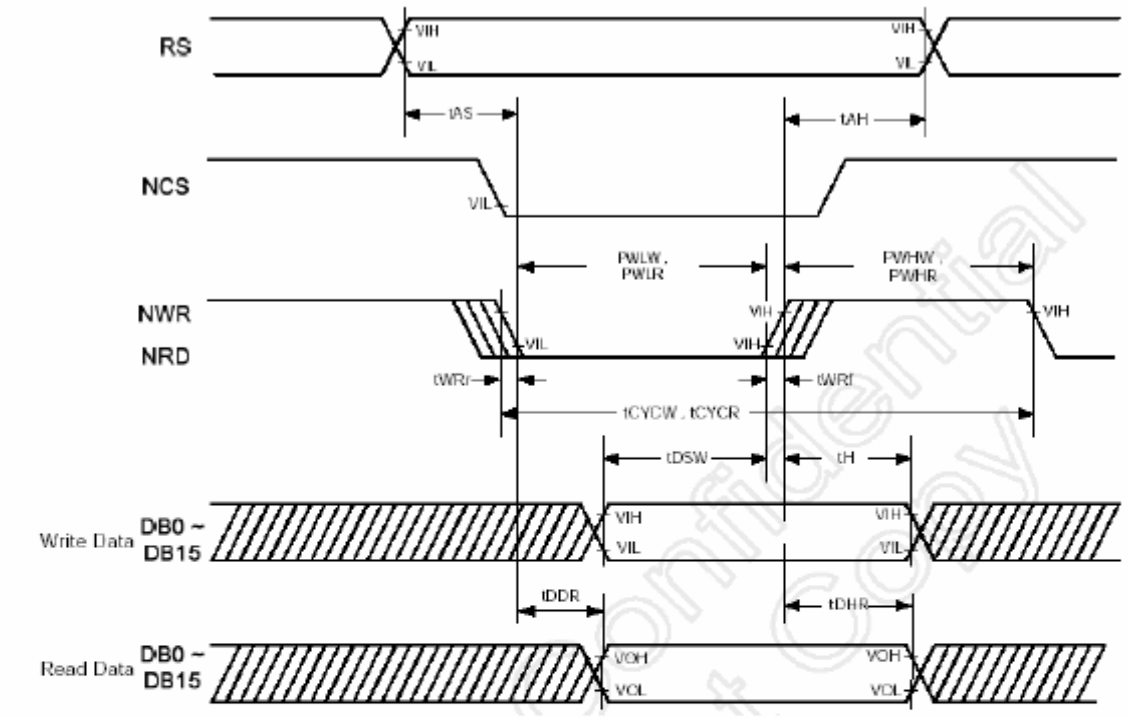

80-system Bus Interface Timing Characteristics

Item		Symbol	Unit	Min.	Typ.	Max.	Test Condition
Bus cycle time	Write	t_{CYCW}	ns	200	-	-	Figure 17.1
	Read	t_{CYCR}	ns	300	-	-	Figure 17.1
Write low-level pulse width		PW_{LW}	ns	40	-	-	Figure 17.1
Read low-level pulse width		PW_{LR}	ns	150	-	-	Figure 17.1
Write high-level pulse width		PW_{HW}	ns	70	-	-	Figure 17.1
Read high-level pulse width		PW_{HR}	ns	150	-	-	Figure 17.1
Write / Read rise / fall time		t_{WRr} , t_{WRf}	ns	-	-	25	Figure 17.1
RS Setup time	(RS to NCS, NWR)	t_{AS}	ns	5	-	-	Figure 17.1
RS hold time	(NCS, NWR to RS)	t_{AH}	ns	5	-	-	Figure 17.1
Write data set up time		t_{DSW}	ns	20	-	-	Figure 17.1
Write data hold time		t_H	ns	15	-	-	Figure 17.1
Read data delay time		t_{DDR}	ns	-	-	100	Figure 17.1
Read data hold time		t_{DHR}	ns	5	-	-	Figure 17.1

Clock Synchronized Serial Data Transfer Interface Operation

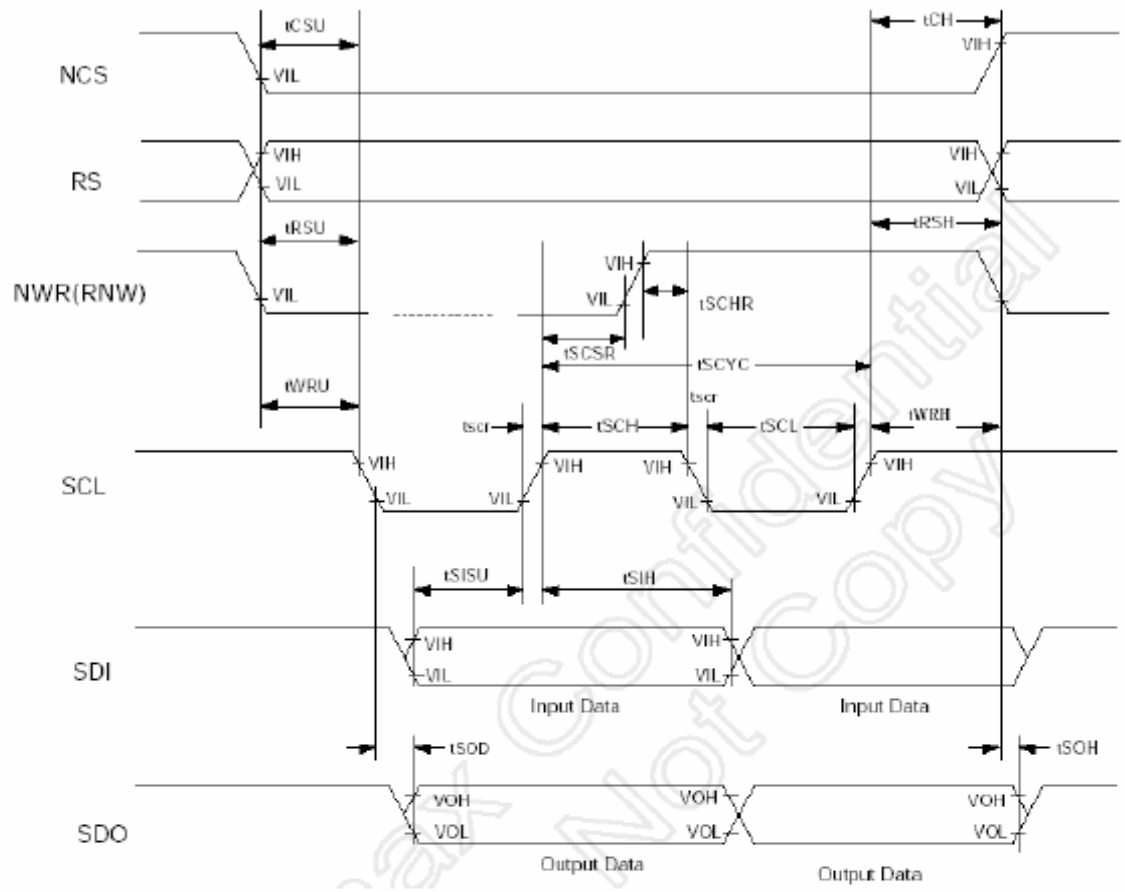

Serial Data Transfer Interface Timing Characteristics

Item		Symbol	Unit	Min.	Typ.	Max.	Test Condition
Serial clock cycle time	Write (received)	t_{SCYC}	ns	100	-	-	Figure 17.3
	Read (transmitted)	t_{SCYC}	ns	200	-	-	Figure 17.3
Serial clock high – level pulse width	Write (received)	t_{SCH}	ns	40	-	-	Figure 17.3
	Read (transmitted)	t_{SCH}	ns	150	-	-	Figure 17.3
Serial clock low – level pulse width	Write (received)	t_{SCL}	ns	40	-	-	Figure 17.3
	Read (transmitted)	t_{SCL}	ns	150	-	-	Figure 17.3
Serial clock rise / fall time		t_{scr} , t_{scf}	ns	-	-	20	Figure 17.3
Chip select (NCS) set up time		t_{CSU}	ns	20	-	-	Figure 17.3
Chip select (NCS) hold time		t_{CH}	ns	60	-	-	Figure 17.3
RS set up time		t_{RSU}	ns	10			Figure 17.3
RS hold time		t_{RSH}	ns	10			Figure 17.3
Read/write select (RNW) set up time		t_{WRU}	ns	10			Figure 17.3
Read/write select (RNW) hold time		t_{WRH}	ns	10			Figure 17.3
Read clock set up time		t_{SCSR}	ns	10			Figure 17.3
Read clock hold time		t_{SCHR}	ns	10			Figure 17.3
Serial input data set up time		t_{SISU}	ns	30	-	-	Figure 17.3
Serial input data hold time		t_{SIH}	ns	30	-	-	Figure 17.3
Serial output data delay time		t_{SOD}	ns	-	-	100	Figure 17.3
Serial output data hold time		t_{SOH}	ns	5	-	-	Figure 17.3

Not Confidential Not Copy

9.Backlight:

9.1 Standard Lamp Styles (Edge Lighting Type):

The LED chips are distributed over the edge light area of the illumination unit, which gives the less power consumption:

9.2 The Main Advantages of the LED Backlight are as Following:

9.2.1 The brightness of the backlight can simply be adjusted. By a resistor or a potentiometer.

9.3 Data About LED Backlight:

Item	Symbol	Conditions	MIN.	TYP.	MAX.	Unit
Forward voltage	**Vf**	**If =45mA**		**4.2**	**4.5**	**V**
Reverse voltage	**Vr**				**5.0**	**V**
Forward current	**If**	**3-chip Parallel**		**45**	**60**	**mA**
Power Consumption	**PBL**	**f =45mA**		**189**	**270**	**mW**
Uniformity		**If=45mA**	**80%**			
Luminous color	**White**					
Chip connection	**3 chip Parallel connection**					

NOTE:

1.Backlight Only
2.Average Luminous Intensity of P1-P9
3.Uniformity = Min(P1~P9)/Max(P1~P9) * 100%>80%

9.4 Measured Method:

P1 ○	**P2** ○	**P3** ○
P4 ○	**P5** ○	**P6** ○
P7 ○	**P8** ○	**P9** ○

(Effective spatial Distribution)
Hole Diameter±1ø ; 1 to 9per Position Measured Luminou

10: Packing Method

CUSTOMER :

MODEL : VA-G243251-L

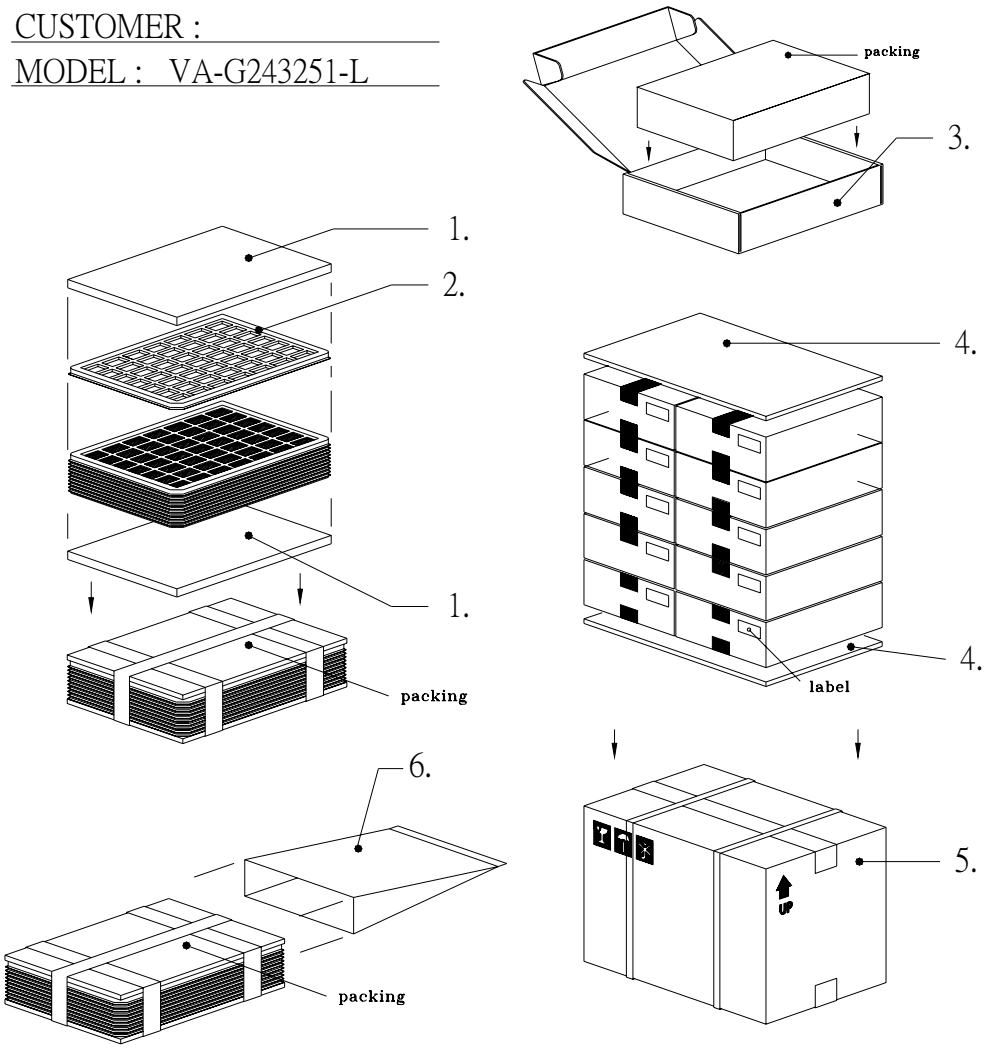

	PARTS LIST				
	ITEM	SIZE(LxWxH) unit:mm	MATERIAL	Q.T.Y	NOTE
1	CARD BOARD(P2)	345.0x225.0x3.5	CARTON	20	
2	TRAY(T306)	335.0x227.0x10	PET	100	
3	INTERNAL BOX(S1)	369.0x234.0x82.0	CARTON	10	
4	CARD BOARD(P1)	490.0x380.0x3.5	CARTON	2	
5	EXTERNAL BOX(L7)	500.0x394.0x458.0	CARTON	1	
6	PE 塑膠袋(W1)	----	PE	10	
	PRODUCT	40.3*55.26*3.6	----	1350	