SPECIFICATION
FOR LCD MODULE
液晶显示模块规格书

MODULE NO.(模块型号):

TFT7201280-33

REVISION(版本): V1.0

This module uses ROHS material(模块使用环保材料)

CUSTOMER(客户): _____

APPROVED BY (核准)	NOTE (说明)

PREPARED BY 制 定	CHECKED BY 审 核	QUALITY DEPARTMENT 品质部	APPROVED BY 核 准

REVISION RECORD

REV NO. 版 本	CONTENTS 内 容	REVISION ITEM 修改项目	REV DATE 日 期
V1.0	First release	Preliminary	2018-11-15

CONTENTS

1. **GENERAL SPECIFICATIONS**(主要特征描述)
2. **EXTERNAL DIMENSIONS**(外形尺寸)
3. **ABSOLUTE MAXIMUM RATINGS**(极限参数)
4. **ELECTRICAL CHARACTERISTICS**(模块电气特性)
5. **BACKLIGHT SPECIFICATION**(背光电气特性)
6. **ELECTRO-OPTICAL CHARACTERISTICS**(光电参数)
7. **INTERFACE DESCRIPTION**(接口定义描述)
8. **TIMING CHARACTERIST**(时序特征)
9. **RELIABILITY TEST CONDITIONS**(可靠性实验条件)
10. **INSPECTION CRITERION**(检查标准)
11. **PRECAUTIONS FOR USING LCD MODULES**(使用注意事项)
12. **PRIOR CONSULT MATTER** (提前商议事项)

1. GENERAL SPECIFICATIONS(主要特征描述)

Item 项目	Contents 内容	Unit 单位
LCD type 液晶显示类型	16.7M TFT TRANSMISSIVE	/
Diagonal length 尺寸	5.0	inch
Recommended Viewing Direction 推荐使用方向	FREE	O'Clock
Dot arrangement 点阵	720(R.G.B)*1280	Dot
Module size (W*H*T) 模块外围尺寸（宽*高*厚）	64.3*118.45*1.55+/-0.05（不含 FPC 及焊锡厚度）	mm^3
Viewing area (W*H) 可视区域（宽*高）	62.9*111.2	mm^2
Active area (W*H) 有效显示区域（宽*高）	62.1*110.4	mm^2
Pixel size (W*H) 像素大小（宽*高）	0.08625*0.08625	mm^2
Backlight Type 背光类型	LED(white 12*LED)	/
Drive IC 驱动 IC	NT35523	/
Interface Type 接口类型	MIPI interface	/

2. EXTERNAL DIMENSIONS(外形尺寸)

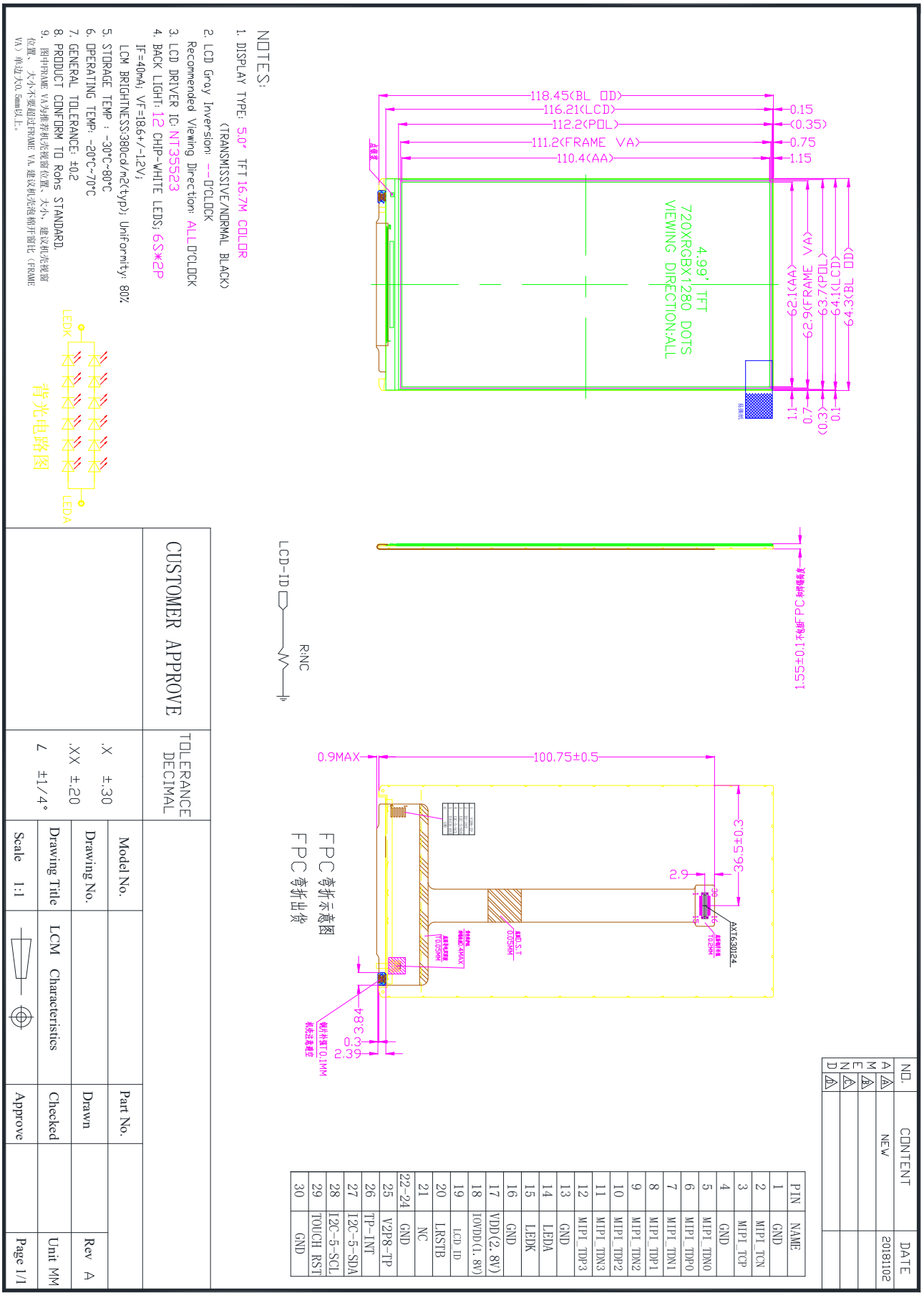

PIN	NAME
1	GND
2	MIPI_TCN
3	MIPI_TCP
4	GND
5	MIPI_TDN0
6	MIPI_TDP0
7	MIPI_TDN1
8	MIPI_TDP1
9	MIPI_TDN2
10	MIPI_TDP2
11	MIPI_TDN3
12	MIPI_TDP3
13	GND
14	LEDA
15	LEDK
16	GND
17	VDD(2.8V)
18	IOVDD(1.8V)
19	LCD_ID
20	LRSTB
21	NC
22-24	GND
25	V2P8-TP
26	TP-INT
27	I2C-5-SDA
28	I2C-5-SCL
29	TOUCH_RST
30	GND

3. ABSOLUTE MAXIMUM RATINGS(极限参数)

Parameter of absolute maximum ratings 参数	**Symbol** 符号	**Min** 最小值	**Max** 最大值	**Unit** 单位	**Remark** 备注
Operating temperature 操作温度	Top	-20	70	˚C	At 25±5˚C
Storage temperature 储存温度	Tst	-30	80	˚C	
Humidity 湿度	RH	/	90%(Max60˚C)	RH	
Power Voltage 电源电压	VDD IOVCC	-0.3	3.6	V	

4. ELECTRICAL CHARACTERISTICS(模块电气特性)

Parameter of DC characteristics 参数	**Symbol** 符号	**Min** 最小值	**Typ** 典型值	**Max** 最大值	**Unit** 单位
Supply voltage for logic 逻辑电压	VDD	2.7	2.8	3.3	V
I/O power supply I/O 口电压	VDDIO	1.65	1.8	3.3	V
Input Current 输入电流	I_{dd}	-	TBD	TBD	mA
Input voltage 'H' level 输入高电平	V_{IH}	0.7*VDDIO	-	VDDIO	V
Input voltage 'L' level 输入低电平	V_{IL}	0	-	0.3*VDDIO	V
Output voltage 'H' level 输出高电平	V_{OH}	0.8*VDDIO	-	VDDIO	V
Output voltage 'L' level 输出低电平	V_{OL}	0	-	0.2*VDDIO	V

5. BACKLIGHT SPECIFICATION(背光电气特性)

Item of backlight characteristics 项目	**Symbol** 符号	**Min** 最小值	**Typ** 典型值	**Max** 最大值	**Unit** 单位	**Condition** 条件
Forward voltage 正向电压	V_f	17.4	18.6	19.8	V	I_f= 40mA
BL Luminance 背光亮度	L_v	8000	8500	-	cd/m^2	
Backlight uniformity 均匀度	No less than 80% （不低于 80%）					
Number of LED LED 数量	-	12			Piece	
Connection mode 连接模式	S/P/M	In series-parallel 混联			-	

6. ELECTRO-OPTICAL CHARACTERISTICS(光电参数)

Item of electro-optical characteristics 项目		Symbol 符号	Condition 条件	Min 最小值	Typ 典型值	Max 最大值	Unit 单位	Note 备注
LCM Surface Luminance 模组表面亮度		Lv	--	340	380	--	cd/m²	Note 4
Contrast Ratio 对比度		CR	--	800	1000	--	--	Note 2
Response time 响应时间		Tr+Tf	--	--	30	35	msec	Note 3
Color gamut 色域		S(%)		65	70	--	%	
Color chromaticity (CIE 1931) 色彩饱和度	White	X	θ=0° Ø=0° Ta=25°C	TBD	0.316	TBD		Note 4 Note 5
		Y		TBD	0.360	TBD		
	Red	X		TBD	TBD	TBD		
		Y		TBD	TBD	TBD		
	Green	X		TBD	TBD	TBD		
		Y		TBD	TBD	TBD		
	Blue	X		TBD	TBD	TBD		
		Y		TBD	TBD	TBD		
Viewing angle 视角范围	Ver.	Y+	CR≧10	80	85	--	deg	Note 1
		Y-		80	85	--		
	Hor.	X-		80	85	--		
		X+		80	85	--		

Note (1): Definition of Viewing Angle （视角定义）

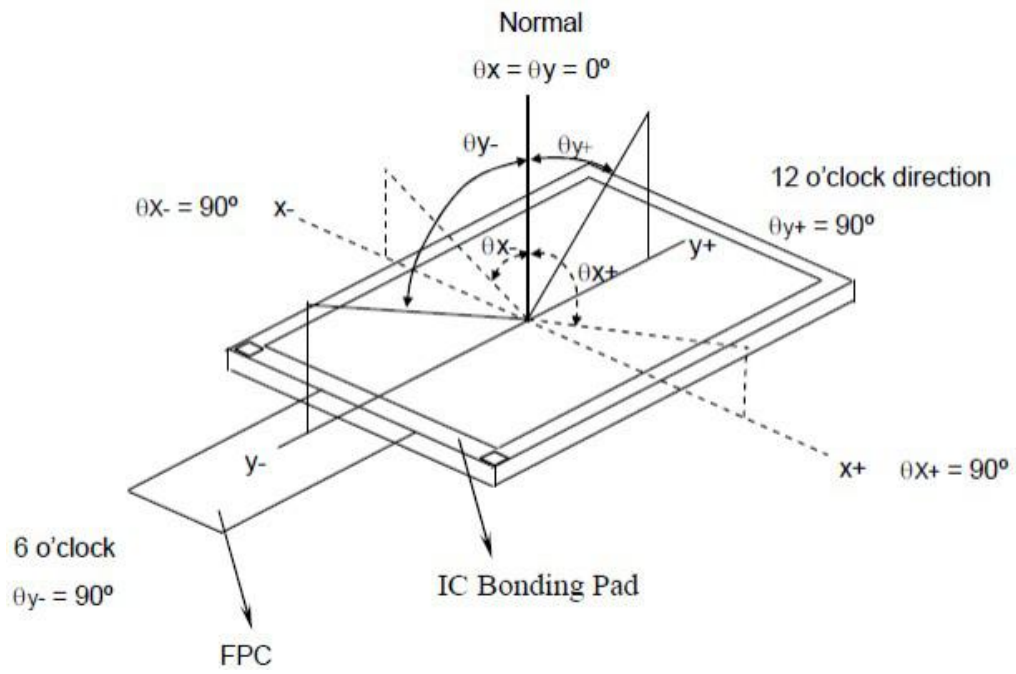

Note (2): Definition of Contrast Ratio(CR) （对比度定义）

Measured point 1 through 5 of panel.（测试 P1 到 P5 的亮度）

$$CR = \frac{\text{Luminance with all pixels white}}{\text{Luminance with all pixels black}} \qquad \text{对比度} = \frac{\text{显示白色画面时平均表面亮度}}{\text{显示黑色画面时平均表面亮度}}$$

Note (3): Definition of Response Time:sum of TR and TF （响应时间定义）

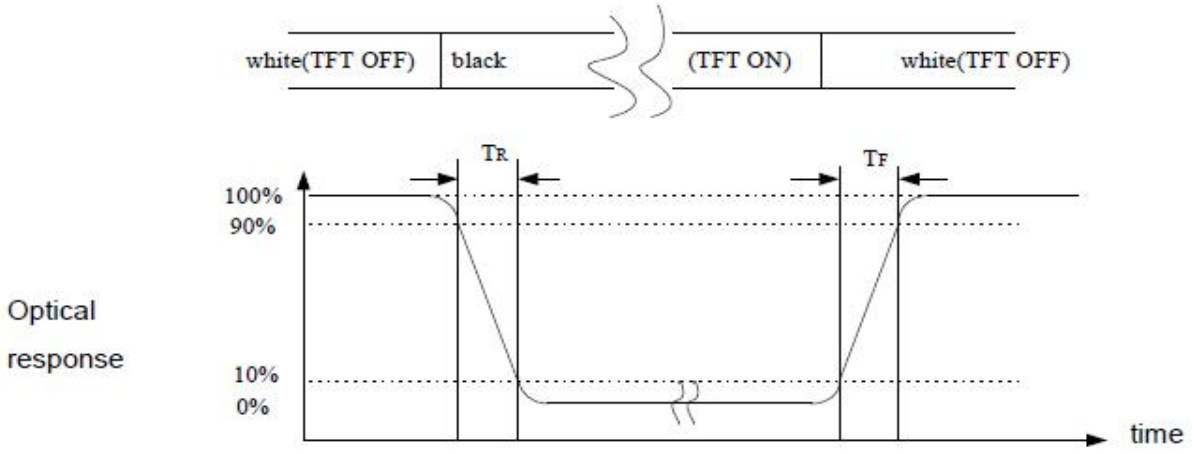

Note (4): Measuring method for Contrast ratio,Surface Luminance,Luminance uniformity, CIE(x,y) Chromaticity （对比度，表面亮度，均匀度，CIE 坐标测试方法）

A : 5 mm
B : 5 mm
H,V : Active Area
Light spot size ∅=5mm, 500mm distance from the LCD surface to detector lens
measurement instrument is TOPCON's luminance meter BM-7

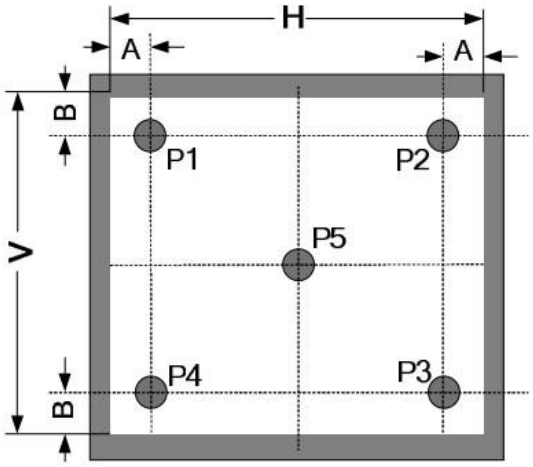

Note (5): CIE(x,y) Chromaticity, The X,Y value is determined by screen active area position 5. （CIE 坐标测试测试点为显示屏中心点 P5）

7. INTERFACE DESCRIPTION(接口定义描述)

Pin No. Pin脚	Symbol 符 号	I/O 输入/出	Description 描 述	When not in use 未使用时的连接
1	GND	P	Ground	--
2	MIPI-TCN	I	Differential clock signals of MIPI interface	Gnd
3	MIPI-TCP	I	Differential clock signals of MIPI interface	Gnd
4	GND	P	Ground	--
5	MIPI-D0N	I	Differential data signals of MIPI interface	Gnd
6	MIPI-D0P	I	Differential data signals of MIPI interface	Gnd
7	MIPI-D1N	I	Differential data signals of MIPI interface	Gnd
8	MIPI-D1P	I	Differential data signals of MIPI interface	Gnd
9	MIPI-D2N	I	Differential data signals of MIPI interface	Gnd
10	MIPI-D2P	I	Differential data signals of MIPI interface	Gnd
11	MIPI-D3N	I	Differential data signals of MIPI interface	Gnd
12	MIPI-D3P	I	Differential data signals of MIPI interface	Gnd
13	GND	P	Ground	--
14	LEDA	P	Power supply Anode input for backlight	--
15	LEDK	P	Power supply Cathode input for backlight	--
16	GND	P	Ground	--
17	VDD_2.8V	P	Power supply to the internal Analog(2.7V-3.3V)	--
18	IOVDD_1.8V	P	Power supply to the internal logic(1.7V-3.3V)	--
19	LCD_ID	0	ID PIN	Open
20	LRST	I	Reset signal pin	--
21	NC	-	Not connect	--
22-24	GND	P	Ground	--
25	V2P8-TP	P	Power supply to CTP	--
26	TP-INT	I/O	CTP external interrupt INT to the host	--
27	I2C-5-SDA	O	CTP I2C Serial Data	--
28	I2C-5-SCL	I	CTP I2C Serial Clock	--
29	TOUCH RST	I	CTP RERSET PIN	--
30	GND	P	Ground	--

8. TIMING CHARACTERIST（时序特征）

8.1 High Speed Mode

(VSS=VSSI=DVSS=0V, VDDI=1.65V to 3.6V, VCI=2.5V to 4.8V,Ta = -30 to 70°C)

Signal	Symbol	Parameter	MIN	TYP	MAX	Unit	Description
DSI-CLK+/-	$2xUI_{INST}$	Double UI instantaneous	2	-	5	ns	4 Lane (Note 2)
DSI-CLK+/-	UI_{INSTA} UI_{INSTB}	UI instantaneous halfs ($UI = UI_{INSTA} = UI_{INSTB}$)	1	-	2.5	ns	4 Lane (Note 2)
DSI-Dn+/-	t_{DS}	Data to clock setup time	0.15xUI	-	-	ps	
DSI-Dn+/-	t_{DH}	Data to clock hold time	0.15xUI	-	-	ps	
DSI-CLK+/-	t_{DRTCLK}	Differential rise time for clock	150	-	0.3xUI	ps	
DSI-Dn+/-	$t_{DRTDATA}$	Differential rise time for data	150	-	0.3xUI	ps	
DSI-CLK+/-	t_{DFTCLK}	Differential fall time for clock	150	-	0.3xUI	ps	
DSI-Dn+/-	$t_{DFTDATA}$	Differential fall time for data	150	-	0.3xUI	ps	

Note 1) Dn = D0, D1, D2 and D3.

Note 2) Maximum total bit rate is 4Gbps for 24-bit data format, 3Gbps for 18-bit data format and 2.67Gbps for 16-bit data format in master-slave cascade application (4-lane x 2) which support to 1600RGBx 2560 resolution.

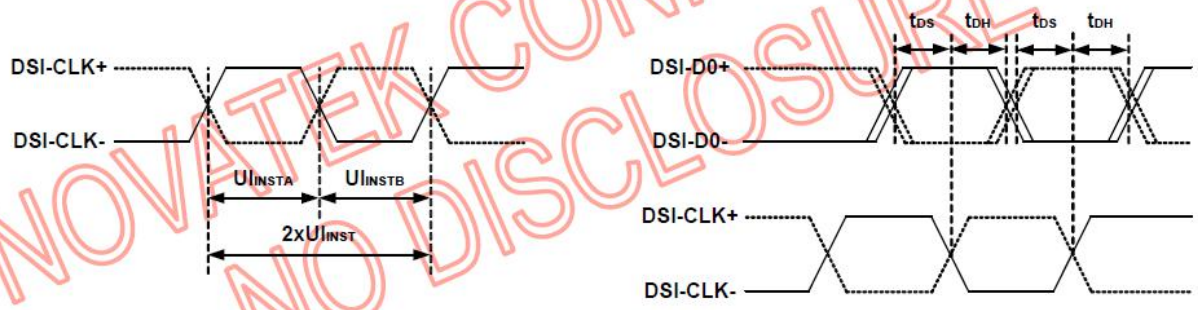

Fig. 7.3.1 DSI clock channel timing

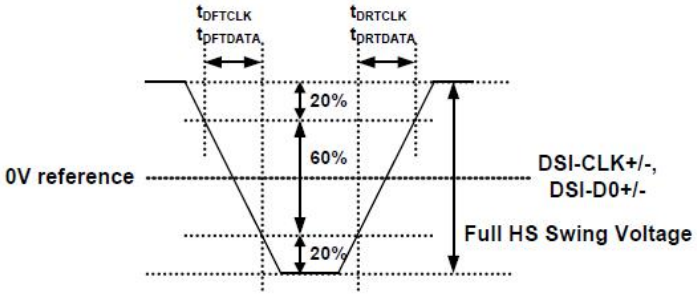

Fig. 7.3.2 Rising and fall time on clock and data channel

NOVATEK CONFIDENTIAL
NO DISCLOSURE

8.2:**Low Power Mode**

(VSS=VSSI=DVSS=0V, VDDI=1.65V to 3.6V, VCI=2.5V to 4.8V,Ta = -30 to 70°C)

Signal	Symbol	Parameter	MIN	TYP	MAX	Unit	Description
DSI-D0+/-	T_{LPXM}	Length of LP-00, LP-01, LP-10 or LP-11 periods MPU → Display Module	50	-	75	ns	Input
DSI-D0+/-	T_{LPXD}	Length of LP-00, LP-01, LP-10 or LP-11 periods Display Module → MPU	50	-	75	ns	Output
DSI-D0+/-	$T_{TA-SURED}$	Time-out before the MPU start driving	T_{LPXD}	-	$2xT_{LPXD}$	ns	Output
DSI-D0+/-	$T_{TA-GETD}$	Time to drive LP-00 by display module	$5xT_{LPXD}$	-	-	ns	Input
DSI-D0+/-	T_{TA-GOD}	Time to drive LP-00 after turnaround request - MPU	$4xT_{LPXD}$	-	-	ns	Output

NOVATEK CONFIDENTIAL
NO DISCLOSURE

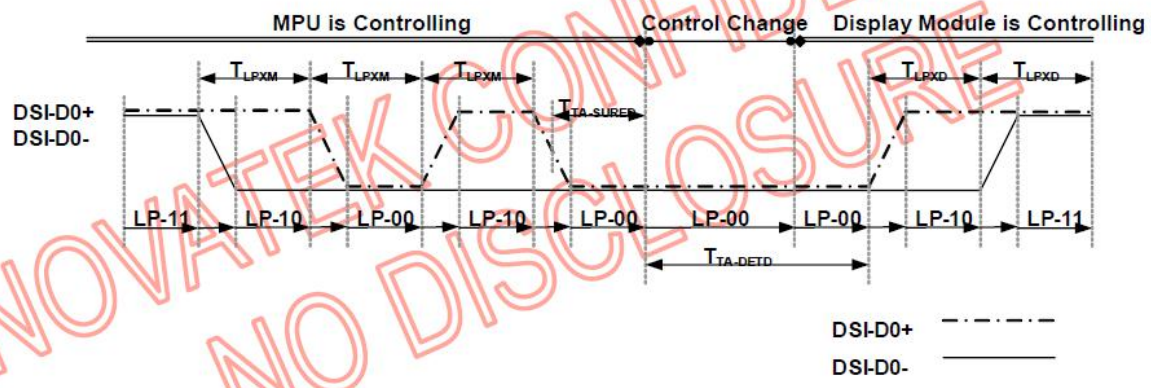

Fig. 7.3.3 Bus Turnaround (BTA) from MPU to display module Timing

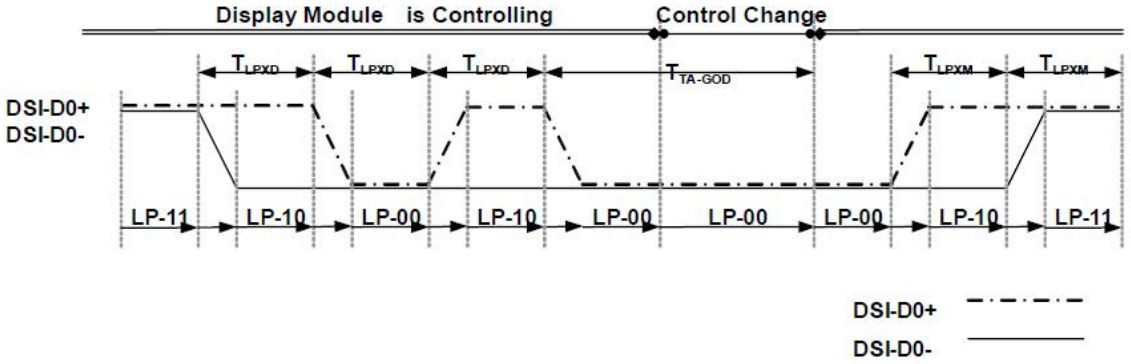

Fig. 7.3.4 Bus Turnaround (BTA) from display module to MPU Timing

8.3:**DSI Bursts**

(VSS=VSSI=DVSS=0V, VDDI=1.65V to 3.6V, VCI=2.5V to 4.8V,Ta = -30 to 70°C)

Signal	Symbol	Parameter	MIN	TYP	MAX	Unit	Description
Low Power Mode to High Speed Mode Timing							
DSI-Dn+/-	T_{LPX}	Length of any low power state period	50	-	-	ns	Input
DSI-Dn+/-	$T_{HS-PREPARE}$	Time to drive LP-00 to prepare for HS transmission	40+4xUI	-	85+6xUI	ns	Input
DSI-Dn+/-	$T_{HS-TERM-EN}$	Time to enable data receiver line termination measured from when Dn crosses V_{ILMAX}	-	-	35+4xUI	ns	Input
High Speed Mode to Low Power Mode Timing							
DSI-Dn+/-	$T_{HS-SKIP}$	Time-out at display module to ignore transition period of EoT	40	-	55+4xUI	ns	Input
DSI-Dn+/-	$T_{HS-EXIT}$	Time to drive LP-11 after HS burst	100	-	-	ns	Input
DSI-Dn+/-	$T_{HS-TRAIL}$	Time to drive flipped differential state after last payload data bit of a HS transmission burst	60+4xUI	-	-	ns	Input
High Speed Mode to/from Low Power Mode Timing							
DSI-CLK+/-	$T_{CLK-POS}$	Time that the MPU shall continue sending HS clock after the last associated data lane has transition to LP mode	60+52xUI	-	-	ns	Input
DSI-CLK+/-	$T_{CLK-TRAIL}$	Time to drive HS differential state after last payload clock bit of a HS transmission burst	60	-	-	ns	Input
DSI-CLK+/-	$T_{HS-EXIT}$	Time to drive LP-11 after HS burst	100	-	-	ns	Input
DSI-CLK+/-	$T_{CLK-PREPARE}$	Time to drive LP-00 to prepare for HS transmission	38	-	95	ns	Input
DSI-CLK+/-	$T_{CLK-TERM-EN}$	Time-out at clock lane display module to enable HS transmission	-	-	38	ns	Input
DSI-CLK+/-	$T_{CLK-PREPARE}$ + $T_{CLK-ZERO}$	Minimum lead HS-0 drive period before starting clock	300	-	-	ns	Input
DSI-CLK+/-	$T_{CLK-PRE}$	Time that the HS clock shall be driven prior to any associated data lane beginning the transition from LP to HS mode	8xUI	-	-	ns	Input

Note 1) Dn = D0, D1, D2 and D3.

Note 2) Two HS transmission can be sent with a break as short as $T_{HS-EXIT}$ from each other in continuous clock mode. In discontinuous mode, the break is longer which account $T_{CLK-POS}$, $T_{CLK-TRAIL}$ and $T_{HS-EXIT}$, before activity in clock and data lanes again.

NOVATEK CONFIDENTIAL
NO DISCLOSURE

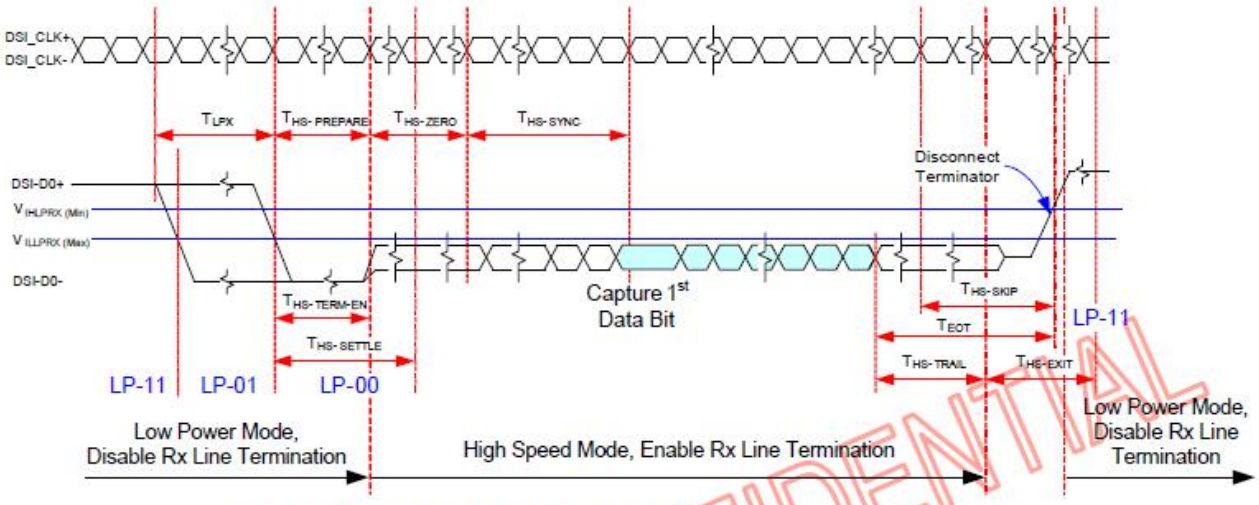

Fig. 7.3.5 Data lanes-Low Power Mode to/from High Speed Mode Timing

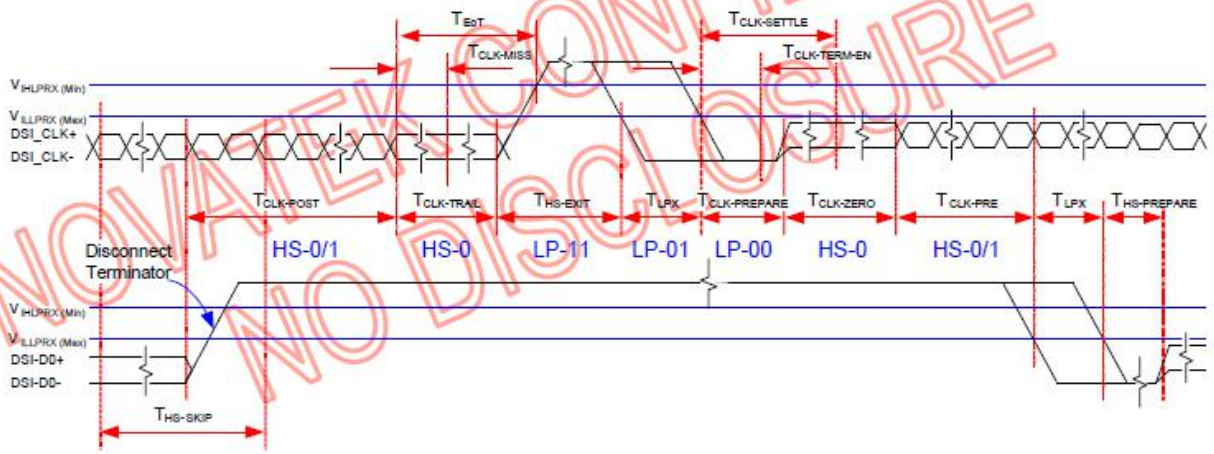

Fig. 7.3.6 Clock lanes- High Speed Mode to/from Low Power Mode Timing

NOVATEK CONFIDENTIAL
NO DISCLOSURE

8.2 REST Timing Characteristics

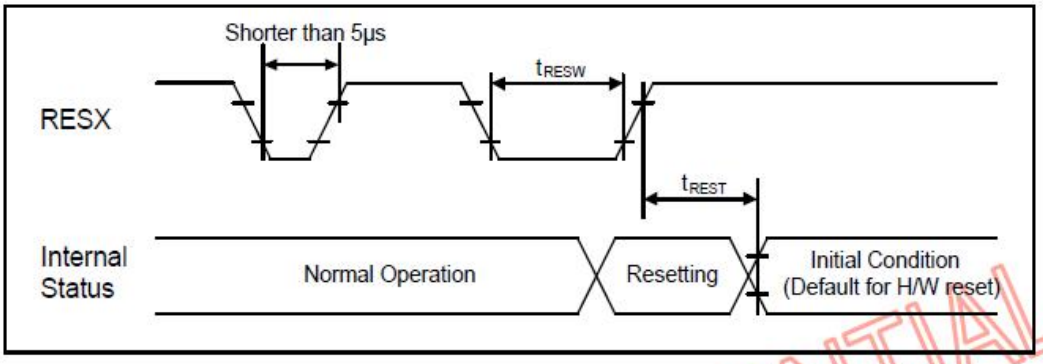

Fig. 7.3.7 Reset input timing

(VSS=VSSI=DVSS=0V, VDDI=1.65V to 3.6V, VCI=2.5V to 4.8V,Ta = -30 to 70°C)

Signal	Symbol	Parameter	MIN	TYP	MAX	Unit	Description
RESX	tRESW	Reset "L" pulse width (Note 1)	10	-	-	μs	
	tREST	Reset complete time (Note 2)	-	-	20	ms	When reset applied during Sleep In Mode
			-	-	120	ms	When reset applied during Sleep Out Mode and Note 5

Note 1) Spike due to an electrostatic discharge on RESX line does not cause irregular system reset according to the table below.

RESX Pulse	*Action*
Shorter than 5μs	*Reset Rejected*
Longer than 10μs	*Reset*
Between 5μs and 10μs	*Reset Start*

Note 2) During the resetting period, the display will be blanked (The display is entering blanking sequence, which maximum time is 120 ms, when Reset Starts in Sleep Out –mode. The display remains the blank state in Sleep In–mode) and then return to Default condition for H/W reset.

Note 3) During Reset Complete Time, values in OTP memory will be latched to internal register during this period. This loading is done every time when there is H/W reset complete time (t_{REST}) within 5ms after a rising edge of RESX.

Note 4) Spike Rejection also applies during a valid reset pulse as shown below:

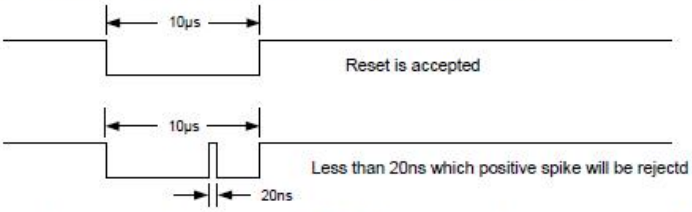

Note 5) It is necessary to wait 5msec after releasing RESX before sending commands. Also Sleep Out command cannot be sent for 120msec

NOVATEK CONFIDENTIAL
NO DISCLOSURE

9. RELIABILITY TEST CONDITIONS(可靠性实验条件)

NO. 序号	**Test Item** 实验项目	Test Condition 实验条件	Inspection after test 判定标准
1	High Temperature Storage 高温存放	80±2˚C,96 hours	Inspection after 2~4 hours storage at room temperature, the sample shall be free from defects.（试验结束后须正常室温存放2~4个小时之后才能测试判定，不允许有以下缺陷） 1. Air bubble in the LCD（模块中有气泡）; 2. Seal leak（漏液）; 3. Non-display（不显示）; 4. Missing segments(漏笔); 5. Glass crack（玻璃破碎）; 6. Current IDD is twice higher than initial value（电流 Idd 大于初时值的 2 倍）; 7. The surface damage（表面损伤）; 8. Do not meet the electrical characteristics（不满足模块电气性能）;
2	Low Temperature Storage 低温存放	-30±2˚C,96 hours	
3	High Temperature Operating 高温操作	70±2˚C,96 hours	
4	Low Temperature Operating 低温操作	-20±2˚C,96 hours	
5	Damp proof Test Storage 高温高湿存放	60±2˚C,90%RH,96 hours	
6	Damp proof Test Operating 高温高湿操作	40±2˚C,90%RH,96 hours	
7	Temperature Cycle Storage 冷热循环存放	-20±2˚C(30min) ~ 25˚C(5min) ~ 80±2˚C(30min), 10Cycle.	
8	Vibration Test 振荡试验	Frequency（频率）:10HZ-55Hz , Amplitude（振幅）:1.5mm , x,y,z every direction for 1 hour (Packing condition) （包装状态，X,Y,Z 每个方向各 1 小时）	
9	Dropping Test 跌落试验	Drop to the ground from 1M height, one time, every side of carton (Packing condition)（包装状态，一米高度, 6 面各一次）	
10	ESD Test 静电测试	C:150pf; R:330Ω; Voltage:8KV; Air discharge(空气放电),10 time	

Remark（备注）:

1. The samples should be applied to only on test item(每个被测试样品只能用于其中的一个测试项目);
2. Sample size for each teat item is 5~10 pcs(每个测试项目的样品数量为 5~10 片);
3. For Damp Proof Test,Pure water(Resistance>10M Ω)should be used（对于防潮试验，试验箱的用水必须是电阻大于 10M 欧姆的纯水）;
4. In case of malfunction defect caused by ESD damage,if it would be recovered to normal state after resetting ,it would be judged as a good part（如果由静电引起产品故障，当放置一段时间后能够恢复正常，则不视为产品缺陷）;
5. Failure Judgment Criterion:Basic Specification ,Electrical Characteristic, mechanical Characteristic, Optical Characteristic（故障判断标准：基本规格，电气特性，机械特性，光电特性）.

10. INSPECTION CRITERION(检查标准)

1. **Sample plan**(检验方案)

   Sampling plan according to GB/T2828.1-2003/ISO 2859-1:1999 and ANSI/ASQC Z1.4-1993,normal level 2 and based on: 参考国标 GB T2828.1-2003 等，2 级检验水准。

   Major defect（重缺陷）: AQL 0.4

   Minor defect（轻缺陷）: AQL 1.0

2. **Inspection condition**(检查条件)

   Viewing distance for cosmetic inspection is about 30cm with bare eyes,and under an environment of 20~40W light intensity,all directions for inspecting the sample should be within 45° against perpendicular line.

   目视被检产品 30cm,在 20 至 40W 的日光灯环境下，检视角为 LCD 平面法线±45° 以内。

3. **Definition of inspection zone in LCD**（检查范围定义）.

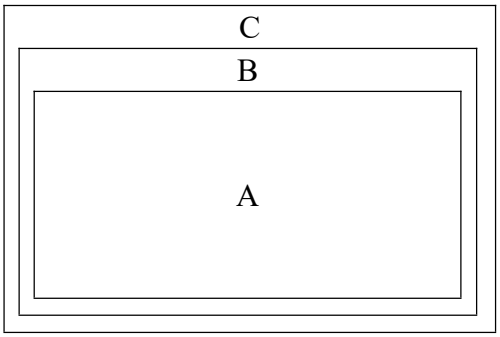

Zone A: character/Digit area 显示区域

Zone B: viewing area except Zone A (Zone A+Zone B=minimum Viewing area)

显示区域外的可视区域（区域 A+B 等于最小可视区域）

Zone C: outside viewing area(invisible area after assembly in customer's product)

非可视区，客户装机后不能观察到的区域

Note：As a general rule ,visual defects in Zone C are permissible, when it is no trouble for quality and assembly of customer's product.

一般情况下，非可视区的外观缺陷在不影响质量和客户装机时是允许的。

4.Inspection Standard（检查标准）

4.1 Major Defect（重缺陷）

NO. 序号	Items to be inspected 检查项目	Inspection Standard 检查标准	Classification of defects 缺陷级别
4.1.1	All functional defects 全部功能缺陷	1. no display 不显示 2. Display abnormally 显示异常 3. Missing vertical,horizontal segment 缺线 4. Short circuit 短路 5. Back-light no lighting,flickering and abnormal lighting 背光不亮、闪动、异显 6. Touch panel no function 触摸屏无功能	Major defect （重缺陷）
4.1.2	Missing 掉落	Missing component 零件掉落	
4.1.3	Outline dimension 外形尺寸	Overall outline dimension beyond the drawing is not allowed 外形尺寸超过图纸允许范围	

4.2 Cosmetic Defect（外观缺陷）

NO. 序号	Items to be inspected 检查项目	Inspection Standard 检查标准	Classification of defects 缺陷级别
4.2.1	Clear Spots 明显点 Black and white Spot defect pinhole, Foreign Particle, Dirt under polarizer or TP 黑白点，针孔，异物点，偏光片污点，TP 污点	For dark/white spot, size Φ is defined as Φ=(x+y)/2. 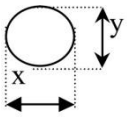 Zone / Size(mm): Acceptable Qty A / B / C Φ≤0.10: Ignore 0.10<Φ≤0.15: 2 0.15<Φ≤0.2: 1 Φ>0.2: 0 Ignore 忽略不计	Minor defect （轻缺陷）
4.2.2	Touch panel Newton ring/ Interference lines 触摸屏牛顿环、干涉线	1. Regular 规则 S≤5mm 允许 1 个 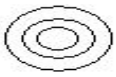 2. Irregular 不规则 S≤1/6 TP area 允许 1 个 When makes the text distortion or linear deformation, are not allowed. 当使文字失真或直线变形时均不允许	Minor defect （轻缺陷）
4.2.3	Line defect 线缺陷 Black line,White line, Foreign material under polarizer 黑白线，偏光片异物	Defined: L line length; W line width Size(mm): Width / Length; Acceptable Qty A / B / C W≤0.02: Ignore / Ignore 0.02< W≤0.03: L≤3.0 / 2 0.03< W≤0.04: L≤2.0 / 1 W≥0.04: Define as spot defect Ignore 忽略不计	Minor defect （轻缺陷）

<table>
<tr><th>NO.
序号</th><th>Items to be inspected
检查项目</th><th>Inspection Standard
检查标准</th><th>Classification of defects 缺陷级别</th></tr>
<tr><td>4.2.4</td><td>Polarize scratch
偏光片划伤</td><td>
If the Polarizer scratch can be seen after mobile phone cover assembling or in the operating condition,judge by the line defect of 4.2.3,(片划伤可以在客户组装后或操作状态下按 4.2.3 标准进行判定)
If the Polarizer scratch can be seen only in non-operating condition or some special angle, judge by the following(如片划伤只能在非操作状态下或某个角度可见，则按以下标准判定)
<table>
<tr><th colspan="2">Size(mm)</th><th colspan="3">Acceptable Qty</th></tr>
<tr><th>Width</th><th>Length</th><th>A</th><th>B</th><th>C</th></tr>
<tr><td>W≤0.02</td><td>Ignore</td><td colspan="2">Ignore</td><td rowspan="4">Ignore
忽略不计</td></tr>
<tr><td>0.02< W≤0.03</td><td>2.0<L≤5.0</td><td colspan="2">2</td></tr>
<tr><td>0.03< W≤0.05</td><td>L≤2.0</td><td colspan="2">1</td></tr>
<tr><td>W≥0.05</td><td></td><td colspan="2">0</td></tr>
</table>
</td><td>Minor defect
（轻缺陷）</td></tr>
<tr><td>4.2.5</td><td>Polarize Air bubble,TP Film bubble
偏光片气泡,TP 菲林气泡（鱼眼）</td><td>
Air bubbles between glass & polarizer 玻璃与片之间
<table>
<tr><th rowspan="2">Zone
Size(mm)</th><th colspan="3">Acceptable Qty</th></tr>
<tr><th>A</th><th>B</th><th>C</th></tr>
<tr><td>Φ≤0.15</td><td colspan="2">Ignore</td><td rowspan="4">Ignore
忽略不计</td></tr>
<tr><td>0.15<Φ≤0.25</td><td colspan="2">2</td></tr>
<tr><td>0.25<Φ≤0.30</td><td colspan="2">1</td></tr>
<tr><td>Φ>0.30</td><td colspan="2">0</td></tr>
</table>
</td><td>Minor defect
（轻缺陷）</td></tr>
<tr><td rowspan="3">4.2.6</td><td rowspan="3">Glass defect
玻璃缺陷</td><td>
1. Chips on corner（崩角）
<table>
<tr><th>X</th><th>Y</th><th>Z</th></tr>
<tr><td>≤3</td><td>≤S</td><td>≤T</td></tr>
</table>
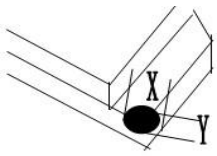

Remark: S= contact pad length;
T= the thickness of glass
</td><td>Minor defect
（轻缺陷）</td></tr>
<tr><td>
2. Usual surface cracks
(一般边崩)
<table>
<tr><th>X</th><th>Y</th><th>Z</th></tr>
<tr><td>≤3</td><td><S</td><td>Ignore</td></tr>
</table>
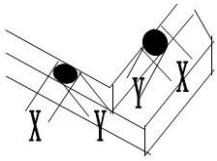

Remark: S= Inner border line of the seal;
S= 玻璃内部边缘环氧框
</td><td>Minor defect
（轻缺陷）</td></tr>
<tr><td>
3. Crack
(裂纹)
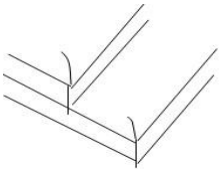
Cracks tend to break are not allowed
任何区域向内延伸的裂纹都不允许
</td><td>Major defect
（重缺陷）</td></tr>
</table>