Product Specification

Part Name: BI-2660V1 Driving Borad for
3.5inch~10.4inch TFT Module
SupportHDMI / VGAInterface

Rev.	Date	Contents	Written	Approved
V00	2013/04/25	Preliminary Specification	Ramon	Wang
V01	2015/11/25	Add New TFT Module	Peter	Wang

Customer:
Approved by

Contents

1. Scope of Application

This standard is applicable to **Factory** production for: **TVD-2660V1.0** test.

2. Product Description

2.1 VGA, CVBS, HDMI video signal input;

2.2 Power input: +12V DC

2.3 Multi function OSD operation

2.4 Remote control function (optional)

2.5 No signal automatic shutdown

3. Signal Input Definition

3.1 1.0Vp-p75 CVBS:

3.2 VGA: 800*480 1024*600 1024*768 (refresh rate of 60 ~ 75) (800*600) (1280*720)

3.3 HOMI (general 1.2 version)

4. Operation Environment

4.1 Working temperature: -10 C ~ +60 C

4.2 Humidity: 90%RH (without water condensation)

5. Storage Environment

5.1 Storage temperature: -20 C ~ +70 C

5.2 Humidity: 90%RH (without water condensation)

6. Operation Power Supply (AT070TN92) AV signal (Ta=25 C)

Item	MIN	Typical	MAX	UNIT
Operating Voltage	+6V	+12	14	V
Operating current	580	300	250	mA

7. Production Characteristics

7.1 Main Components and Parts 主要零部件构成

No.	零部件 Components	物料规格PN	制造商Manufacturer	数量Qyt	备注Note
1	Main IC	RTD2660		1PCS	R1
		PM25X40		1PCS	U27
2	Oscillator	27.000MHz	鸿康HC/柯茨KC	1PCS	Y1

7.2 Product Structure and Physical Picture（Unit:mm）

Mainboard:

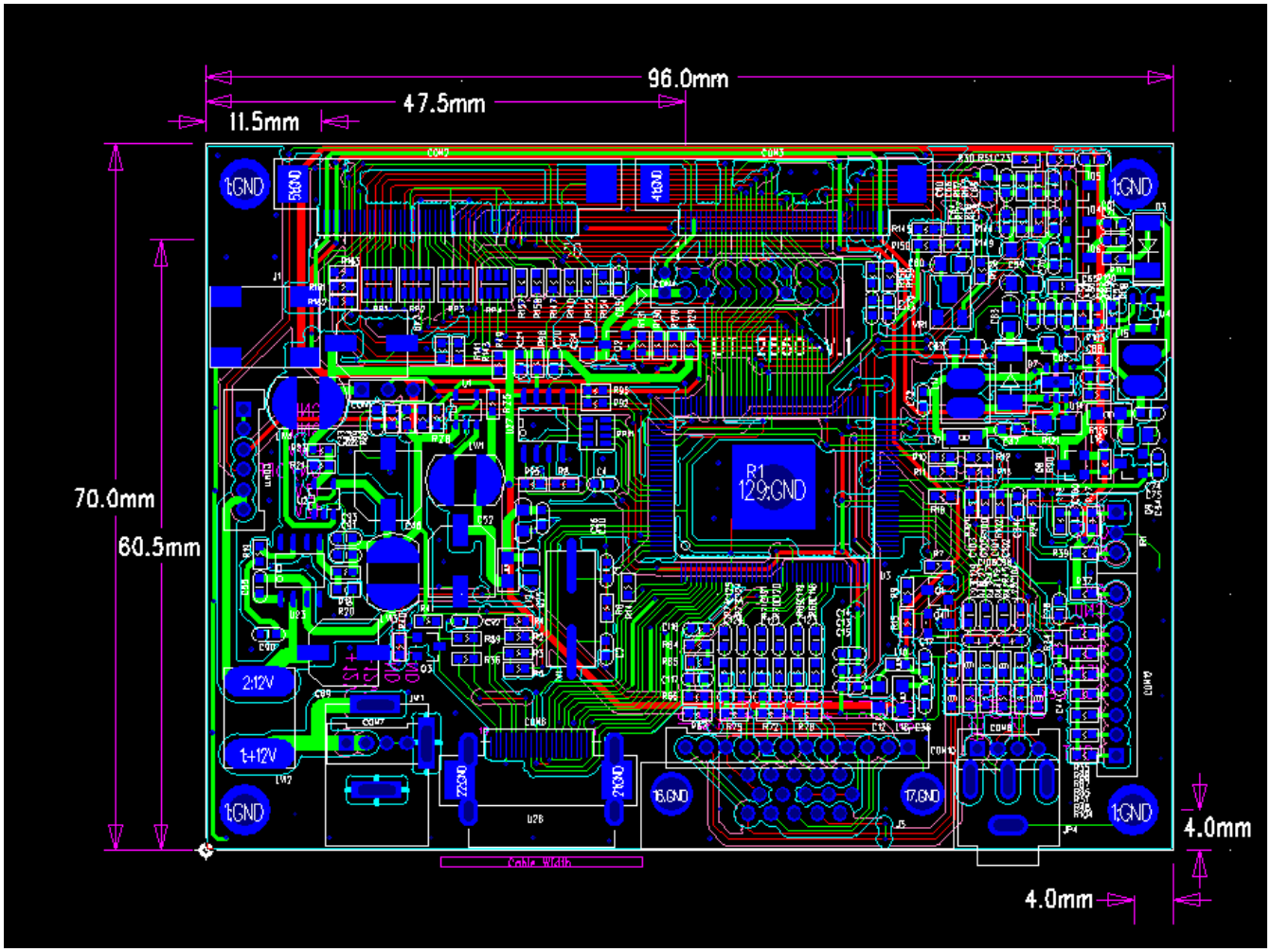

OSD Keyboard:

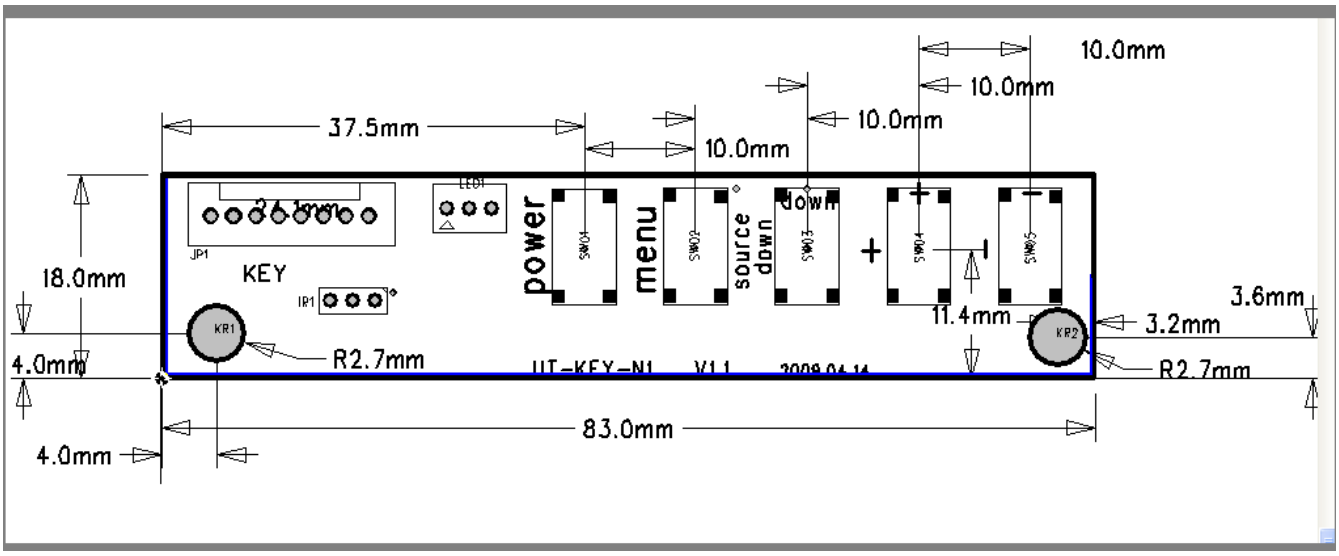

TFT + Driving board Picture: Support HDMI / VGA / VA Input

7.3 Product Interface Definition:

CON8(signal input) 4PIN/2.0

PIN	Symbol	Description
1	CVBS	AV imput
2	GND	Ground
3	CVBS1	AV1 imput
4	GND	Ground

IR(Remote control receiving interface) 3PIN/2.0

PIN	Symbol	Description
1	IR	
2	GND	
3	VCC	

CON10 (VGA input) 12PIN/2.0

PIN	Symbol	Description
1	GND	GND
2	VS	VSYNC INPUT 场同步信号
3	HS	HSYNC INPUT 行同步信号
4	GND	GND
5	R+	RED INPUT+
6	GND	GND
7	G+	GREEN INPUT+
8	GND	GND
9	B+	BLUE INPUT+
10	GND	GND
11	SDA	I2C 通道
12	SCL	I2C 通道

CON11（INVERTER control）6PIN/2.0

PIN	Symbol	Description
1	GND	Ground
2	GND	Ground
3	+5V	+5V
4	On/off	Backlight Voltage Input
5	VCC_12V	INVERTER 12V
6	VCC_12V	INVERTER 12V

CON12 (Key board definition) 9PIN/2.0

PIN	symbol	Description
1	VCC	5v
2	GND	Ground
3	LED	Power light 电源指示灯
4	POWER	Switch
5	MENU	Menu
6	SOURCE	Signal Switch Menu 信号切换菜单
7	LEFT	UP
8	RIGH	Down
9	AUTO	Auto（可选）

CON7 （Power interface）4PIN/2.0

PIN	Symbol	Description
1	+12V	Power
2	+12V	Power
3	GND	Ground
4	GND	Ground

J1 （back light interface）2PIN 窄口高压座

PIN	Symbol	Description
1	LED+	LED+
2	LED-	LED-

CON2 (FPC) 50PIN/ 0.5

PIN	Symbol	I/O	Note
1	LED+	P	
2	LED+	P	
3	LED-	P	
4	LED-	P	
5	GND	P	
6	VCOM	I	
7	VCC	p	
8	MODE	I	
9	DE	I	
10	VS	I	
11	HS	I	
12	B7	I	
13	B6	I	
14	B5	I	
15	B4	I	
16	B3	I	
17	B2	I	
18	B1	I	
19	B0	I	
20	G7	I	
21	G6	I	
22	G5	I	
23	G4	I	

24	G3	I	
25	G2	I	
26	G1	I	
27	G0	I	
28	R7	I	
29	B6	I	
30	B5	I	
31	B4	I	
32	B3	I	
33	B2	I	
34	B1	I	
35	B0	I	
36	GND	P	
37	DCLK	I	
38	GND	P	
39	L/R	I	
40	U/D	I	
41	VGH	P	
42	VGL	P	
43	AVDD	P	
44	RESET	I	
45	NC		
46	VCOM	I	
47	DITHB	I	
48	GND	P	
49	NC		
50	NC		

CON3 (FPC Element Definition）40P-0.5

PIN	Symbol	I/O	Note
1	VCOM	P	
2	VDD	P	
3	VDD	P	
4	NC		
5	RESET	I	
6	STBYB	I	
7	GND	P	
8	RXINO-	I	
9	RXINO+	I	
10	GND	P	
11	RXIN1-	I	
12	RXIN1+	I	
13	GND	P	
14	RXIN2-	I	
15	RXIN2+	I	
16	GND	P	
17	RXCLKIN-	I	
18	RXCLKIN+	I	
19	GND	P	
20	RXIN3-	I	
21	RXIN3+	I	
22	GND	P	
23	NC		
24	NC		

25	GND	P	
26	NC		
27	DIMO	O	
28	SELB	I	
29	AVDD	P	
30	GND	P	
31	LED-	P	
32	LED-	P	
33	L/R	I	
34	U/D	I	
35	VGL	P	
36	NC		
37	NC		
38	VGH	P	
39	LED+	P	
40	LED+	P	

CON04 (LVDS) 30P-2.0 Interface Definition:

1	VCC	Note
2	VCC	
3	VCC	
4	GND	
5	GND	
6	GND	
7	RX00-	
8	RXOO+	
9	RX01-	
10	RXO1+	
11	RX02-	
12	RX02+	
13	GND	
14	GND	
15	RX0COLK-	
16	RX0COLK+	
17	RXO3-	
18	RX03+	

8. Power Supply

8.1 Testing Structure

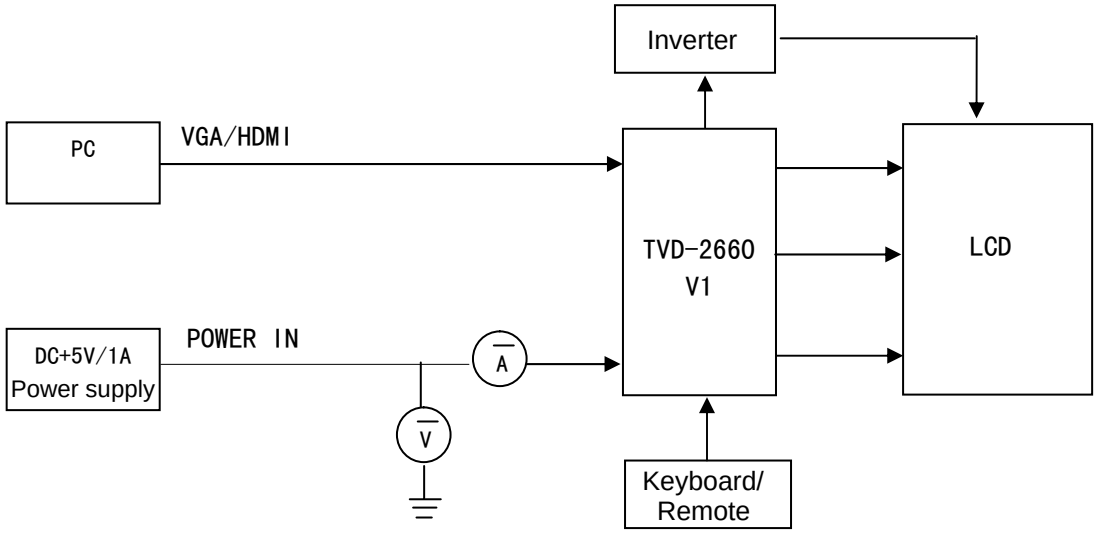

9. Electric Parameters

9.1 Power Consumption of Drive Board (AT070N92 / TVT0700B*)

Input voltage (VIN)	Input current（IIN）				Note
	Min	Typical	Max	unit	
+12V	260	280	300	mA	

10. LCD Specification (TVT0700B*/AT070TN92)

Item	Specification	Unit
Screen size	8.0(Diagonal	inch
Resolution	800×(R,G,B)×480	dot
AA	162(H)×121.5(V)	mm
Dot Pitch	010675(H)×0.2025(V)	mm

11. Electric Circuit

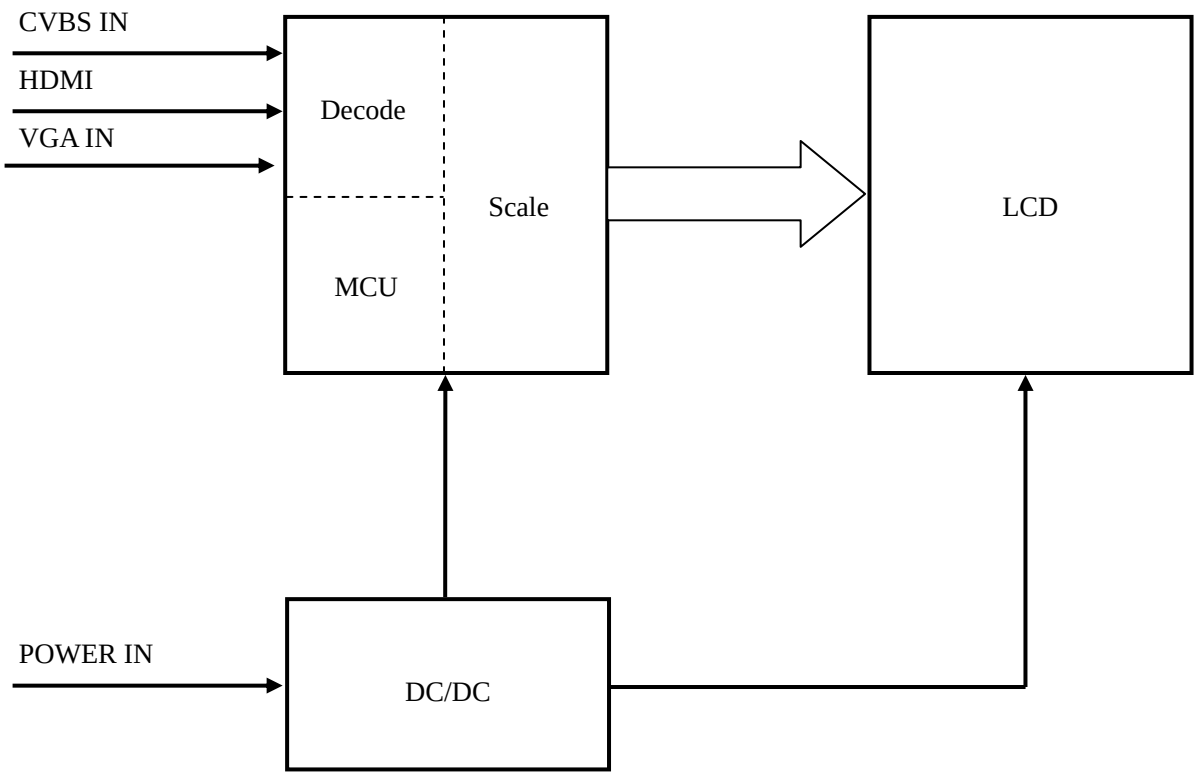

12. Basic Operation Instructions

12.1 Button Operation

Button a total of POWER, MENU, SOURCE, LEFT, RIGHT and other five operating keys.
(6 keys can be selected)

12.1.1 Key Definition:

POWER： in the shutdown state, press the POWER key, boot. In the boot state, press the POWER key, shutdown.
SOURCE： no OSD menu appears as the source switch, there is OSD when the ESC key
MENU： main menu, click on the menu when you click to select the OK key
+： DOWN is not selected when the menu, the menu is selected as LEFT
-： there is no UP when the menu is selected, the menu is selected as RIGHT

12.1.2 Remote Control Operation:

Remote control with POWER, MENU, LEFT, RIGHT, UP, DOWN six operation keys, and operation and the same key operation

13. Inspection Equipment

13.1 PHILIPS PM-5418TD video signal generator;
13.2 PS-305D DC power supply;
13.3 Fluke 45 multimeter with table;
13.4 Lecroy Wave Surfer 454/Tektronix TDS 1012 oscilloscope with Wave;
13.5 Cold and hot alternating equipment.

14. Function Test (Ta=25 ℃)

14.1 CVBS input signal display test

14.1.1 Tested in accordance with the following PCB connection.

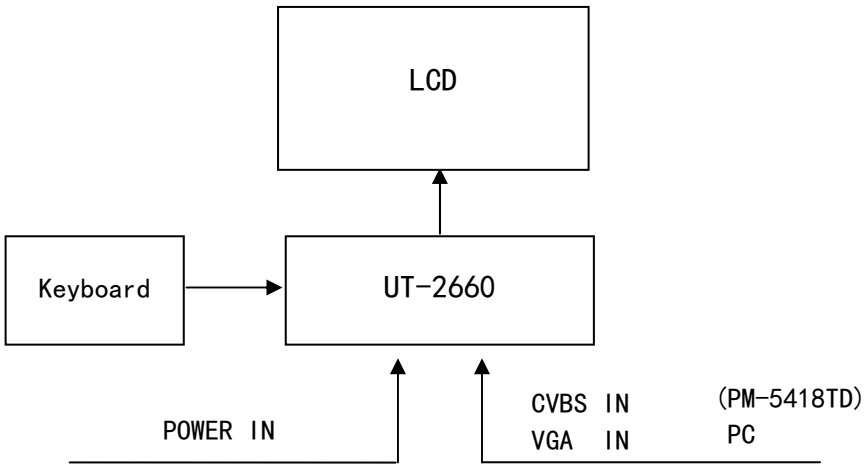

14.1.2 Turn on the power and signal carefully observe whether the display is normal.

14.1.3 Please switch to CVBS input signal In the

14.1.4 test instrument PM5418TD gray scale output, carefully observe the display effect, should be displayed as a gray bar.

Select the color of

14.1.5 in the test instrument PM5418TD, carefully observe the display effect, should be displayed as eight colors (black, blue, red, magenta, green, blue, yellow and white color).

14.1.6 in the test instrument PM5418TD select electronic circle, carefully observe the display effect, should be shown as the next pattern.

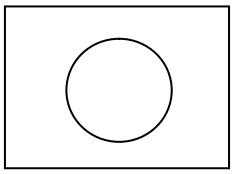

14.1.7 In the test instrument PM5418TD choose red color, carefully observe the display effect, should be displayed as red.

14.1.8 In the test instrument PM5418D choose green color, carefully observe the display effect, should be all green.

14.1.9 In the PM5418TD test instrument selection blue color, carefully observe the display effect, should be all blue.

14.1.10 In the test instrument PM5418TD choose red and blue colors, carefully observe the display effect,

all goods should be displayed as red.

14.1.11 In the test instrument PM5418TD choose red and green color, carefully observe the display effect, should be all yellow. Choose the blue green color

14.1.12 in test instrument PM5418TD, carefully observe the display effect, should be all green.

14.1.13 In test instrument PM5418TD choose RGB color, carefully observe the display effect, should be all white.

14.1.14 test instrument PM5418TD off color, carefully observe the display effect, should be displayed as a black background.

14.1.15 record test results in the report.

14.2 VGA input signal display test

Please switch to the VGA input signal, then PC, refer to the 14.1 test content for testing.

15. Reliability Test Items

Item		Test condition	Quantity	Criteria
Storage environment Test	High Temperature	+70℃ 96Hr	2	operating ok at room temperature
	Low Temperature	−20℃ 96Hr	2	
Operating environment Test	High Temperature	+60℃ 96Hr	2	OK
	Low Temperature	−10℃ 96Hr	2	
Turn On at low temperature		Storage at -20℃ 40min → turn on 2Hour → turn on 4times (1taim/5min) 2Hour → turn on 4times (1taim/5min) 4Hour → turn on	2	
Thermal Shock		-20℃ 30min → 25℃ 30min → 60℃ operating 30 cycles.	2	
Operate at High Temperature and Humidity		+60℃ 90%RH operating 240 hours.	2	

Notes:

1. test at the enviroment no dew
2. After test,must storage at least 24hours in oven,at room temperature and humidity.

16. Delivery Inspection Criterion

NO.	Item	Method	Sampling Criteria	Criteria
1	Electrical characteristic	GB2828-2003	II	Serious Defects: CR=0
2	Dimension			Major Defects: AQL=0.65
3	Appearance / Package			Minor Defects: AQL=1.0