LCD SPECIFICATION

Model : BI0320WQV

This module uses ROHS material

For Customer's Acceptance:

1.0	2018-06-19	First Release	

CONTENTS

GENERAL INFORMATION

EXTERNAL DIMENSIONS

ABSOLUTE MAXIMUM RATINGS

ELECTRICAL CHARACTERISTICS

BACKLIGHT CHARACTERISTICS

ELECTRO-OPTICAL CHARACTERISTICS

INTERFACE DESCRIPTION

BLOCK DIAGRAM

APPLICATION NOTES

RELIABILITY TEST

GENERAL INFORMATION

Item	Contents	Unit
LCD type	TFT/Transmissive/Normally white	/
Size	3.2	Inch
Viewing direction	6:00 (without image inversion and least brightness change)	O' Clock
Gray scale inversion direction	12:00 (contrast peak located at)	O' Clock
LCM (W × H)× D	48.40×81.50×2.77	mm^3
Active area (W×H)	41.76×69.60	mm^2
Pixel pitch (W×H)	0.174×0.174	mm^2
Number of dots	240 (RGB) × 400	/
Driver IC	ST7793	/
Backlight type	6 LEDs	/
Interface type	18 bits RGB/MCU,SPI	/
Color depth	262K	/
Pixel configuration	R.G.B vertical stripe	/
Top polarizer surface treatment	Glare	/
Input voltage	2.8	V
With/Without TSP	Without TSP	/
TP surface treatment	-	/
Weight	TBD	g

Note 1: RoHS compliant;
Note 2: LCM weight tolerance: ± 5% .

EXTERNAL DIMENSIONS

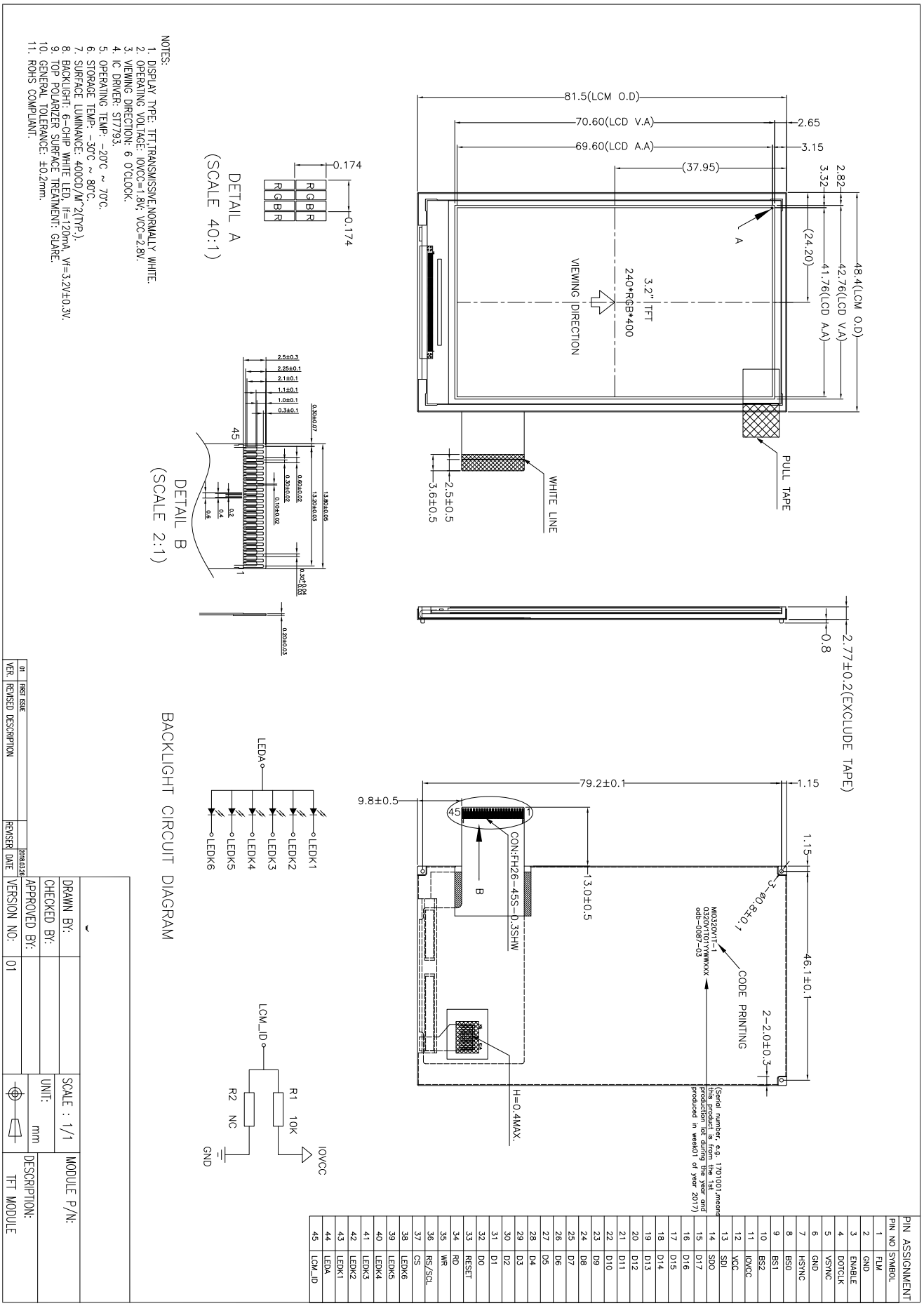

PIN NO	SYMBOL
1	FLM
2	GND
3	ENABLE
4	DOTCLK
5	VSYNC
6	GND
7	HSYNC
8	BS0
9	BS1
10	BS2
11	IOVCC
12	VCC
13	SDI
14	SDO
15	D17
16	D16
17	D15
18	D14
19	D13
20	D12
21	D11
22	D10
23	D9
24	D8
25	D7
26	D6
27	D5
28	D4
29	D3
30	D2
31	D1
32	D0
33	RESET
34	RD
35	WR
36	RS/SCL
37	CS
38	LEDK6
39	LEDK5
40	LEDK4
41	LEDK3
42	LEDK2
43	LEDK1
44	LEDA
45	LCM_ID

PIN ASSIGNMENT

ABSOLUTE MAXIMUM RATINGS

Parameter	Symbol	Min	Max	Unit
supply voltage	VCC	-0.3	4.6	V
	IOVCC	-0.3	4.6	V
Input signal voltage	VIN	-0.3	VCC+0.3	V
Operating temperature	T_{OP}	-20	70	°C
Storage temperature	T_{ST}	-30	80	°C

Note: VIN:D[17:0].CS,RD,WR,RS/SCL,SDI,VSYNC,HSYNC,DOTCLK,ENABLE,RESET,BS[2:0]

ELECTRICAL CHARACTERISTICS

Parameter	Symbol	Min	Typ	Max	Unit
Logic supply voltage	VCC	2.5	2.8	3.3	V
Analog supply voltage	IOVCC	1.65	1.8	3.3	V
Input voltage ' H ' level	V_{IH}	0.8IOVCC	-	IOVCC	V
Input voltage ' L ' level	V_{IL}	GND	-	0.2IOVCC	V
Output voltage ' H ' level	V_{OH}	0.7IOVCC	-	IOVCC	V
Output voltage ' L ' level	V_{OL}	GND	-	0.3IOVCC	V

BACKLIGHT CHARACTERISTICS

Item	Symbol	Min.	Typ.	Max.	Unit	Condition
Forward voltage	Vf	-	3.2	3.4	V	Ta=25±2°C, 60%RH±5%
Forward current	If	-	120	-	mA	
Power consumption	W_{BL}	-	384	-	mW	
Operating life time	-	30000	50000	-	Hrs	

Note :

Operating life time means brightness goes down to 50% initial brightness;

The life time of LED will be reduced if LED is driven by high current,high ambient temperature and humidity conditions;

Typical operating life time is an estimated data.

ELECTRO-OPTICAL CHARACTERISTICS

Item		Symbol	Condition	Min	Typ	Max	Unit	Remark	Note
Response time		Tr+Tf	θ=0° ∅=0° Ta=25℃	-	20	30	ms	FIG 1.	4
Contrast ratio		Cr		480	600	-	---	FIG 2.	1
Luminance uniformity		δ WHITE		80	-	-	%	FIG 2.	3
Surface Luminance		Lv		320	400	-	cd/m^2	FIG 2.	2
Viewing angle range		θ	∅ = 90°	50	60	-	deg	FIG 3.	6
			∅ = 270°	35	45	-	deg	FIG 3.	
			∅ = 0°	50	60	-	deg	FIG 3.	
			∅ = 180°	50	60	-	deg	FIG 3.	
CIE (x, y) chromaticity	Red	x	θ=0° ∅=0° Ta=25℃	0.578	0.628	0.678		FIG 2.	5
		y		0.302	0.352	0.402			
	Green	x		0.318	0.368	0.418			
		y		0.535	0.585	0.635			
	Blue	x		0.091	0.141	0.191			
		y		0.035	0.085	0.135			
	White	x		0.266	0.316	0.366			
		y		0.294	0.344	0.394			

Note 1. Contrast Ratio(CR) is defined mathematically as For more information see FIG 2.

$$\text{Contrast Ratio} = \frac{\text{Average Surface Luminance with all white pixels (P1, P2, P3, P4, P5)}}{\text{Average Surface Luminance with all black pixels (P1, P2, P 3,P4, P5)}}$$

Note 2. Surface luminance is the LCD surface from the surface with all pixels displaying white. For more information see FIG 2.

Lv = Average Surface Luminance with all white pixels (P1, P2, P 3, P4, P5)

Note 3. The uniformity in surface luminance ， δ WHITE is determined by measuring luminance at each test position 1 through 5, and then dividing the maximum luminance of 5 points luminance by minimum luminance of 5 points luminance. For more information see FIG 2.

$$\delta\ \text{WHITE} = \frac{\text{Minimum Surface Luminance with all white pixels (P1, P2, P 3, P4, P5)}}{\text{Maximum Surface Luminance with all white pixels (P1, P2, P 3, P4, P5)}}$$

Note 4. Response time is the time required for the display to transition from White to black(Rise Time, Tr) and from black to white(Decay Time, Tf). For additional information see FIG 1. The test equipment is Autronic-Melchers's ConoScope. Series.

Note 5. CIE (x, y) chromaticity，The x, y value is determined by measuring luminance at each test position 1 through 5,and then make average value.

Note 6. Viewing angle is the angle at which the contrast ratio is greater than 2. For TFT module the conrast ratio is greater than 10. The angles are determined for the horizontal or x axis and the vertical or y axis with respect to the z axis which is normal to the LCD surface. For more information see FIG 3.

Note 7. For viewing angle and response time testing, the testing data is base on Autronic-Melchers's ConoScope. Series Instruments For contrast ratio, Surface Luminance, Luminance uniformity, CIE The test data is base on TOPCON's BM-5 photo detector.

FIG. 1 The definition of Response Time

The response time is defined as the following figure and shall be measured by switching the input signal for "black" and "white".

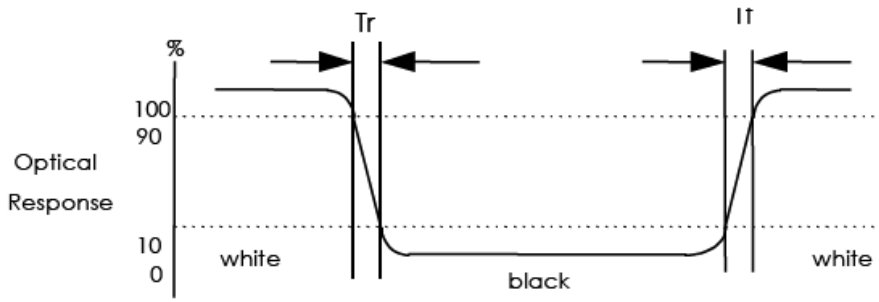

FIG. 2 Measuring method for Contrast ratio, surface luminance, Luminance uniformity , CIE (x, y) chromaticity

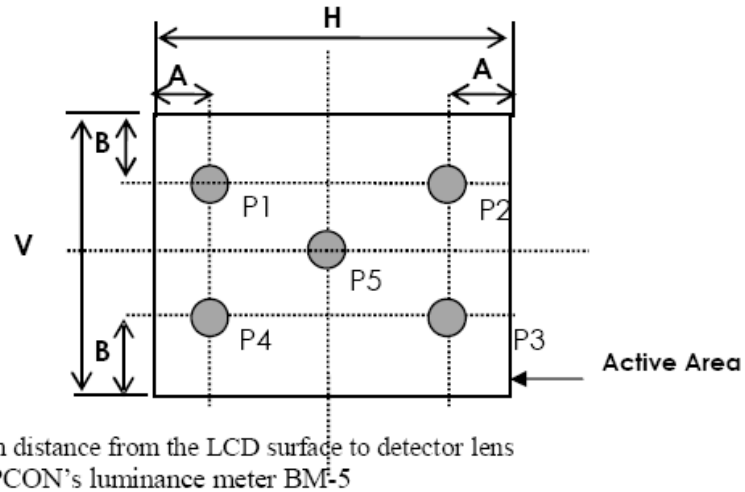

A : 5 mm
B : 5 mm
H,V : Active Area
Light spot size ∅=7mm, 500mm distance from the LCD surface to detector lens
measurement instrument is TOPCON's luminance meter BM-5

FIG. 3 The definition of viewing angle

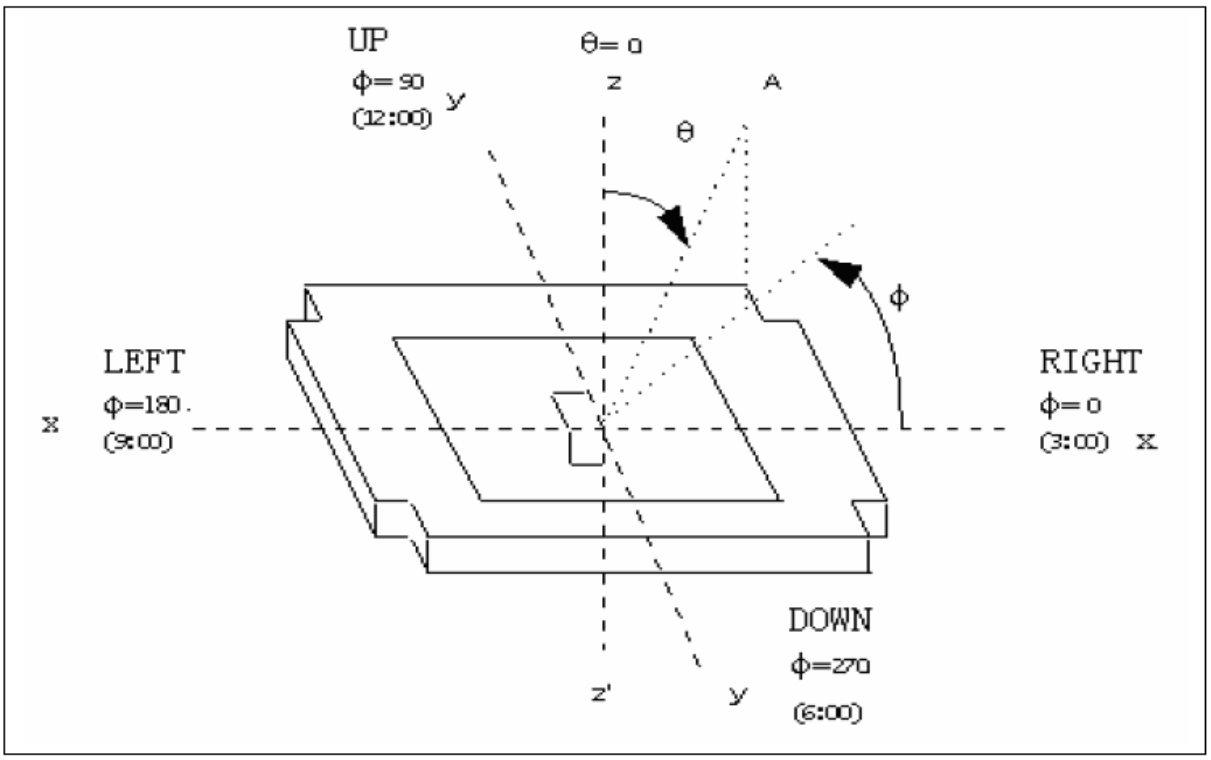

INTERFACE DESCRIPTION

No	Symbol	I/O	Description	Remarks
1	FLM	O	Tearing effect output	
2	GND	P	Ground	
3	ENABLE	I	A data ENABLE signal in RGB I/F mode; Has to be fixed to GND level if is not used	
4	DOTCLK	I	Dot clock signal in RGB I/F mode; Has to be fixed to GND level if is not used	
5	VSYNC	I	Frame synchronizing signal in RGB I/F mode; Has to be fixed to IOVCC level if is not used	
6	GND	P	Ground	
7	HSYNC	I	Line synchronizing signal in RGB I/F mode; Has to be fixed to IOVCC level if is not used	
8	BS0	I	Interface selection	Note 2
9	BS1	I	Interface selection	Note 2
10	BS2	I	Interface selection	Note 2
11	IOVCC	P	Digital I/O power supply	
12	VCC	P	Digital power supply	
13	SDI	I	Serial data input; If not used, please let it connected to IOVCC or GND level	
14	SDO	O	Serial data output	
15~32	D17~D0	I	Data input	
33	RESET	I	Reset signal; Must be reset after power is supplied	
34	RD	I	Read signal; Fix it to IOVCC or GND level when using serial bus interface	
35	WR	I	Write signal;Fix it to IOVCC or GND level when using serial bus interfas	
36	RS/SCL	I	Command or parameter select signal under parallel mode;Low:command,High:parameter. When under serial interface,it servers as clock signal.	
37	CS	I	Chip select signal,low:chip can be accessed; Must be connected to GND IF IS not used	
38	LEDK6	P	Backlight cathode LED6	
39	LEDK5	P	Backlight cathode LED5	
40	LEDK4	P	Backlight cathode LED4	
41	LEDK3	P	Backlight cathode LED3	
42	LEDK2	P	Backlight cathode LED2	
43	LEDK1	P	Backlight cathode LED1	
44	LEDA	P	Backlight anlde	
45	LCM_ID	P	Ground	

Note 1: I/O definition:

I-----Input O----- Output p-----Power(Ground)

Note 2: Interface seletion:

BS2	BS1	BS0	MPU Interface Mode	Data pin
0	0	0	8080 18-bit Interface	DB[17:0]
0	0	1	8080 9-bit Interface	DB[17:9]
0	1	0	8080 16-bit Interface	DB[17:10], DB[8:1]
0	1	1	8080 8-bit Interface	DB[17:10],
1	0	ID	SPI	SDI, SDO
1	1	0	MDDI	MDDI_DATA MDDI_STB
1	1	1	MDDI with Sub-panel Support	

APPLICATION NOTES

8080 Series MCU Parallel Interface Characteristics:18-bit Bus

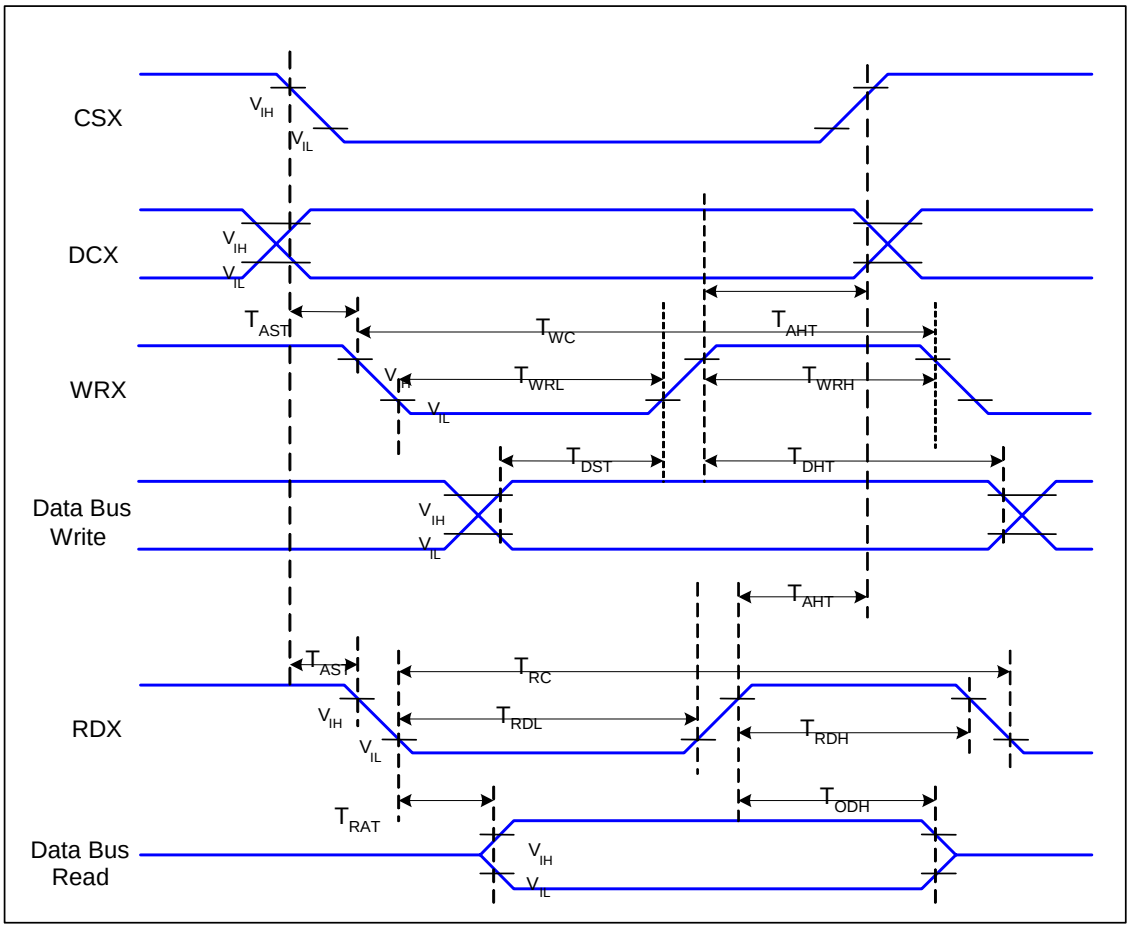

Figure 2 Parallel Interface Timing Characteristics (8080-Series MCU Interface)

IOVCC=1.65 to VCC, VCC=2.5 to 3.3V,AGND=DGND=0V,Ta=25 ℃

Signal	Symbol	Parameter	Min	Max	Unit	Description
DCX	TAST	Address Setup Time	0	--	ns	
	TAHT	Address Hold Time (Write/Read)	2	--	ns	
WRX	TWC	Write Cycle	75	--	ns	
	TWRH	Control Pulse “H” Duration	25	--	ns	
	TWRL	Control Pulse “L” Duration	30	--	ns	
RDX	TRC	Read Cycle (ID)	450	--	ns	When Read ID Data
	TRDH	Control Pulse “H” Duration (ID)	250	--	ns	
	TRDL	Control Pulse “L” Duration (ID)	170	--	ns	

Signal	Symbol	Parameter	Min	Max	Unit	Description
DB[17:0]	TDST	Data Setup Time	20	--	ns	TRAT, TRATFM: 3K ohm Pull up or Down and 30pF Parallel Cap. To GND. TODH: 3K ohm Pull up or Down.
	TDHT	Data Hold Time	10	--	ns	
	TRAT	Read Access Time (ID)	--	150	ns	
	TODH	Output Disable Time	10	--	ns	

Table 3 8080 Parallel Interface Characteristics

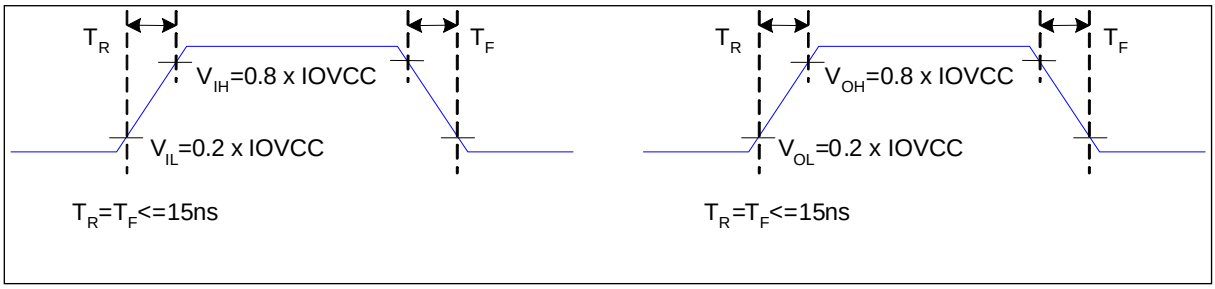

Figure 3 Rising and Falling Timing for I/O Signal

Note: The rising time and falling time (Tr, Tf) of input signal and fall time are specified at 15 ns or less. Logic high and low levels are specified as 20% and 80% of IOVCC for Input signals.

2. RGB Interface Characteristics:

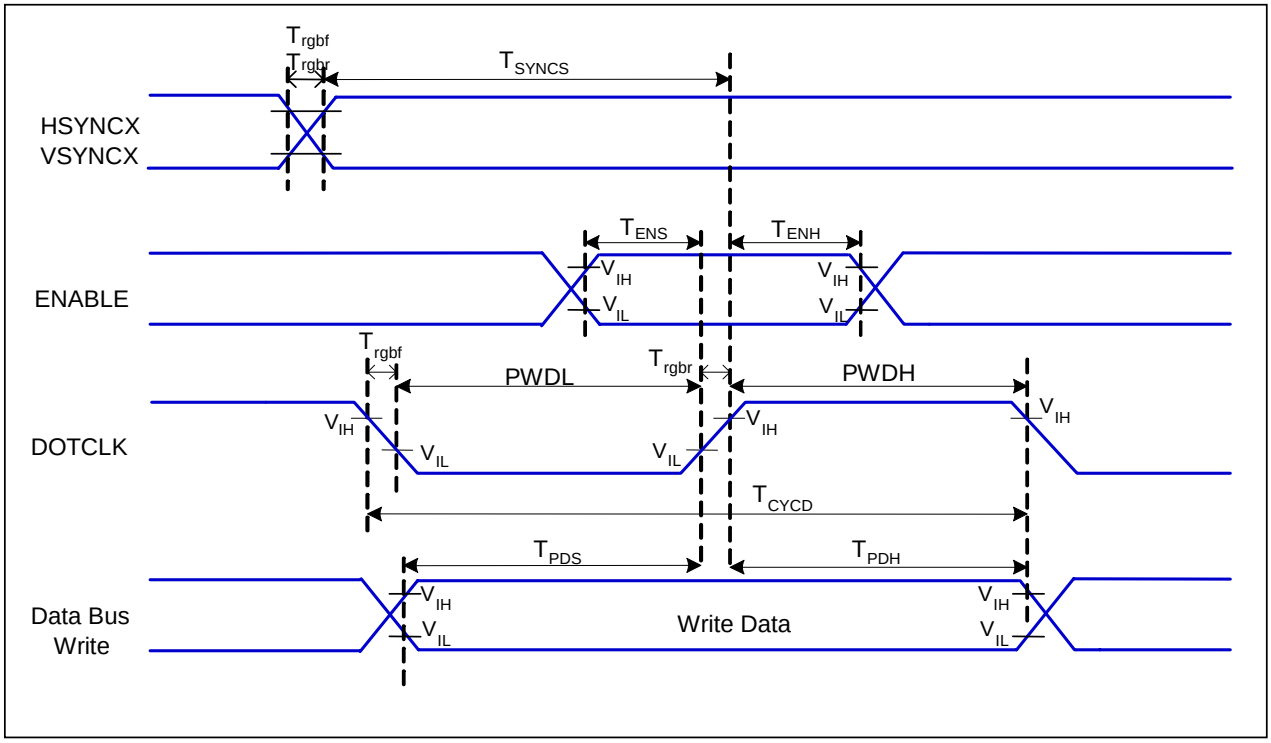

IOVCC=1.65 to VCC, VCC=2.5 to 3.3V,AGND=DGND=0V,Ta=25 ℃

Signal	Symbol	Parameter	MIN	MAX	Unit	Description
HSYNCX VSYNCX	TSYNCS	VSYNC, HSYNC Setup Time	30	-	ns	
ENABLE	TENS	Enable Setup Time	30	-	ns	
	TENH	Enable Hold Time	30	-	ns	
DOTCLK	PWDH	DOTCLK High-level Pulse Width	40	-	ns	
	PWDL	DOTCLK Low-level Pulse Width	40	-	ns	
	TCYCD	DOTCLK Cycle Time	100	-	ns	
DB	TPDS	PD Data Setup Time	40	-	ns	
	TPDH	PD Data Hold Time	40	-	ns	

Table 5 RGB Interface Timing Characteristics

2.1 RGB Interface Timing

The timing chart of 18-bit RGB interface mode is shown as the following.

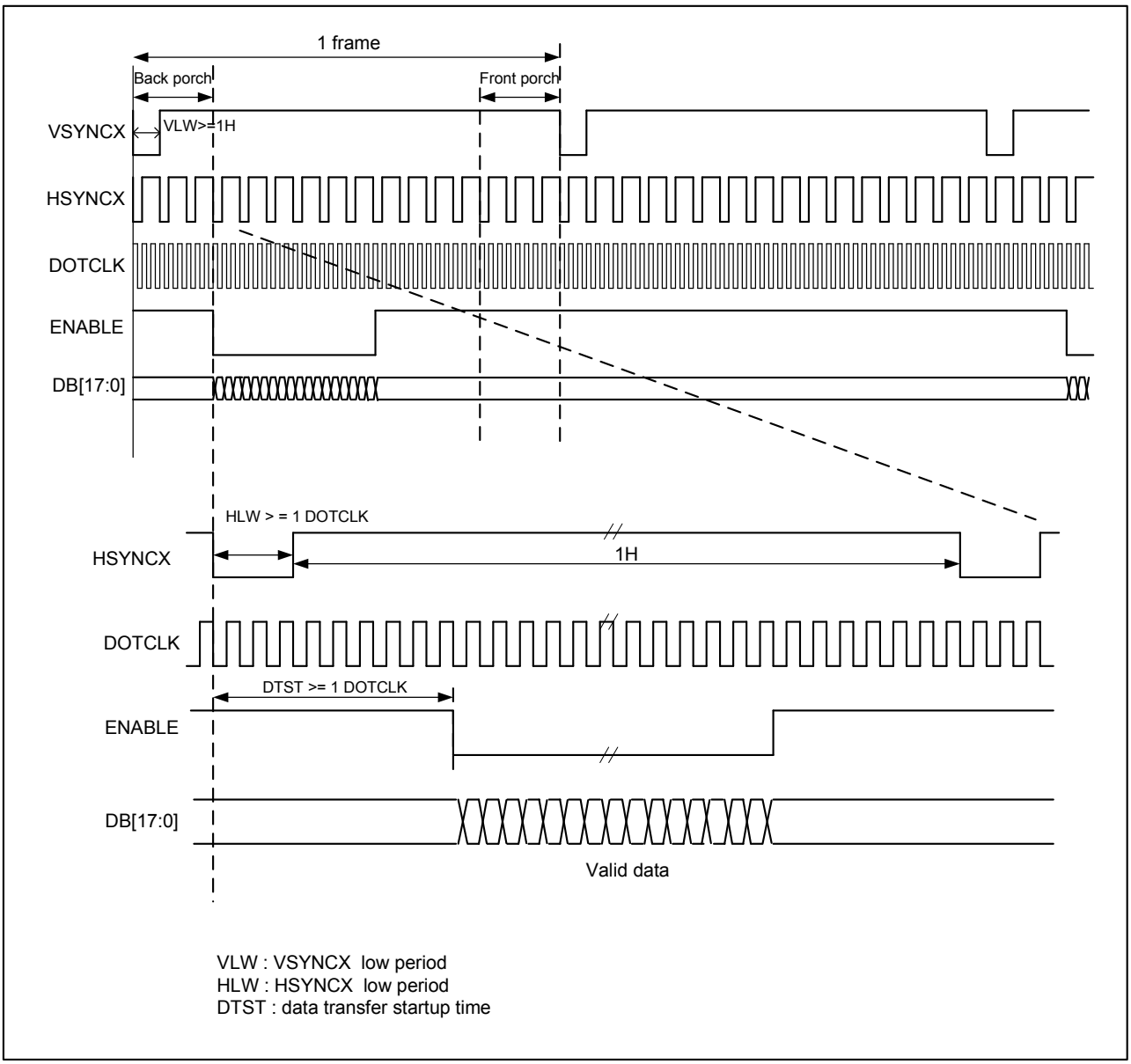

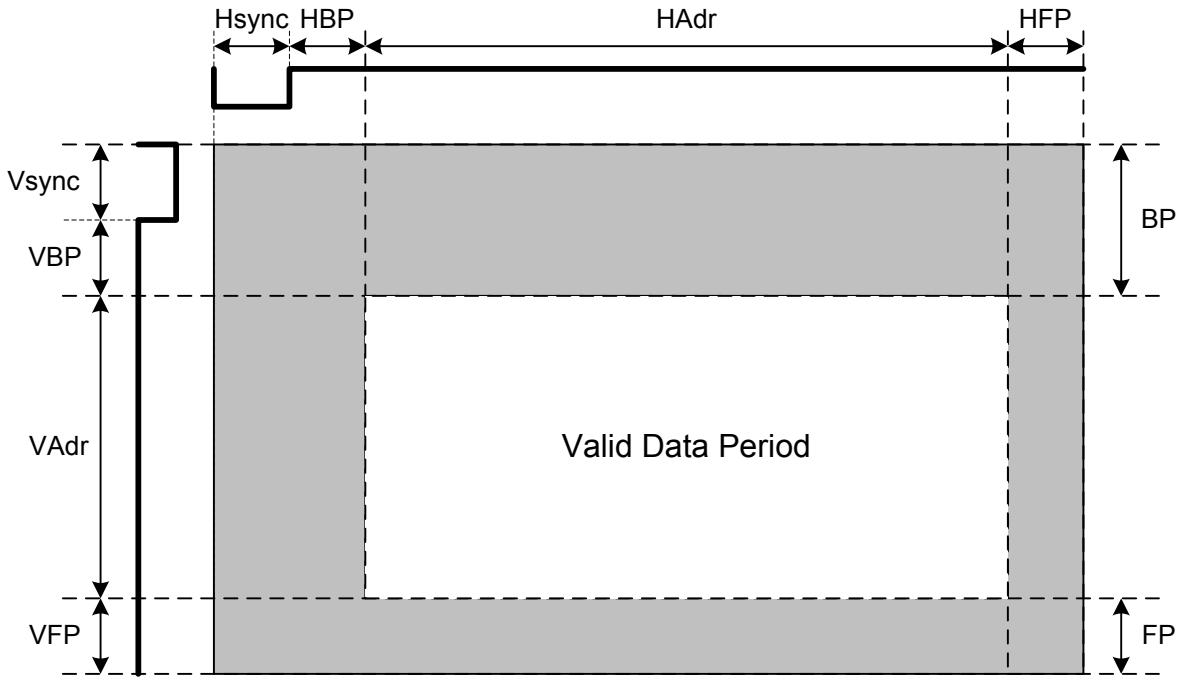

Figure 24 RGB Interface Timing Chart

The timing chart of RGB interface must meet the following table:

Parameters	Symbols	Min.	Typ.	Max.	Unit
Horizontal Synchronization	Hsync	2	10	16	DOTCLK
Horizontal Back Porch	HBP	2	20	24	DOTCLK
Horizontal Address	HAdr	-	240	-	DOTCLK
Horizontal Front Porch	HFP	2	10	16	DOTCLK
Vertical Synchronization	Vsync	1	2	4	Line
Vertical Back Porch	VBP	1	2	-	Line
Vertical Address	VAdr	-	400	-	Line
Vertical Front Porch	VFP	3	4	-	Line

3. Serial Data Transfer Interface Characteristics:

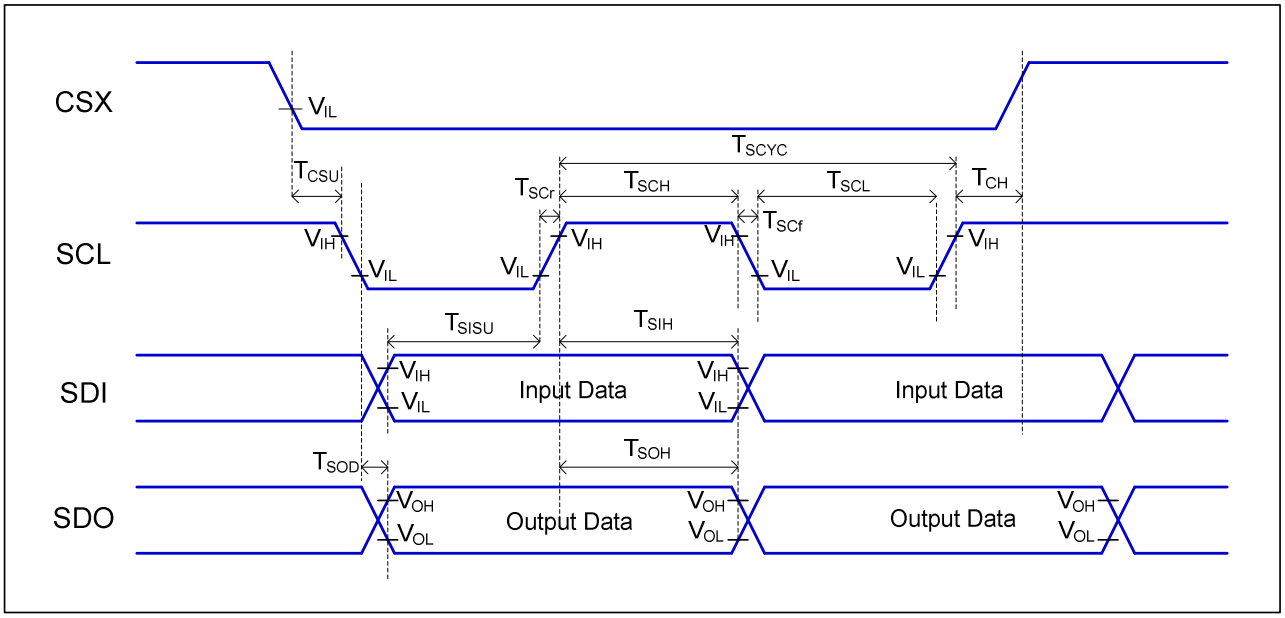

VDDI=1.65 to VDD, VDD=2.5 to 3.3V, AGND=DGND=0V, Ta=25 ℃

Signal	Symbol	Parameter	Min	Max	Unit	Description
CSX	TCSU	Chip Select Setup Time	20		ns	-
	TCH	Chip Select Hold Time	60		ns	
SCL	TSCH	SCL “H” pulse width (Write)	40		ns	
	TSCH	SCL “H” pulse width (Read)	150		ns	
	TSCYC	Serial clock cycle (Write)	100		ns	
	TSCYC	Serial clock cycle (Read)	350		ns	
	TSCL	SCL “L” pulse width (Write)	40		ns	
	TSCL	SCL “L” pulse width (Read)	150		ns	
SDI	TSISU	Serial Input Data Setup Time	30		ns	
	TSIH	Serial Input Data Hold Time	30		ns	
SDO	TSOD	Serial Output Data Setup Time	--	130	ns	
	TSOH	Serial Output Data Hold Time	10	--	ns	

4 SPI Interface Characteristics

RELIABILITY TEST

No.	Test Item	Test Condition	Remarks
1	High Temperature Storage Test	80℃±2℃/240Hrs.	Note2
2	Low Temperature Storage Test	-30℃±2℃/240Hrs.	Note1,2
3	High Temperature Operation Test	70℃±2℃/240Hrs.	
4	Low Temperature Operation Test	-20℃±2℃/240Hrs.	Note1
5	High Temperature and High Humidity Operation Test	60±5℃, 90%RH 240Hrs.	Note1,2
6	Thermal Shock Test (Non-operating)	-30±2℃(30Min.)~25±2℃(5Min.)~80±2℃(30Min.) 10Cycles	
7	Vibration Test (Non-operating)	Frequency:10~55Hz Amplitude: 1.5mm Sweep Time: 11Mins Test Period: 6 Cycles For Each Direction Of X, Y, Z (Packing Condition)	
8	Shock Test (Non-operating)	100G, 6Ms Direction: ±X, ±Y, ±Z Cycle: 3 Times	
9	Electro Static Discharge Test	R:330Ω, C:150pF, 5points/panel Air: ±8KV, 5times; Contact:±4KV, 5times.	

Note 1：Without water condensation

Note 2：The function test shall be conducted after 2 hours storage at the room temperature and humidity after removed from the test chamber.