SPECIFICATION
FOR LCD MODULE

MODULE NO.

BI050WXW

CUSTOMER(客户)：_____

APPROVED BY (核准)	NOTE (说明)

PREPARED BY 制 定	CHECKED BY 审 核	QUALITY DEPARTMENT 品质部	APPROVED BY 核 准

REVISION RECORD

REV NO. 版 本	CONTENTS 内 容	REVISION ITEM 修改项目	REV DATE 日 期
V1.0	First release	Preliminary	2016-11-10

CONTENTS

1. **GENERAL SPECIFICATIONS**(主要特征描述)
2. **EXTERNAL DIMENSIONS**(外形尺寸)
3. **ABSOLUTE MAXIMUM RATINGS**(极限参数)
4. **ELECTRICAL CHARACTERISTICS**(模块电气特性)
5. **BACKLIGHT SPECIFICATION**(背光电气特性)
6. **ELECTRO-OPTICAL CHARACTERISTICS**(光电参数)
7. **INTERFACE DESCRIPTION**(接口定义描述)
8. **TIMING CHARACTERIST**（时序特征）
9. **RELIABILITY TEST CONDITIONS**(可靠性实验条件)
10. **INSPECTION CRITERION**(检查标准)
11. **PRECAUTIONS FOR USING LCD MODULES**(使用注意事项)
12. **PRIOR CONSULT MATTER** (提前商议事项)

1. GENERAL SPECIFICATIONS(主要特征描述)

Item 项目	Contents 内容	Unit 单位
LCD type 液晶显示类型	16.7M TFT TRANSMISSVIE	/
Diagonal length 尺寸	5.0	inch
Recommended Viewing Direction 推荐使用方向	FREE	O'Clock
Dot arrangement 点阵	720(R.G.B)*1280	Dot
Module size (W*H*T) 模块外围尺寸（宽*高*厚）	64.7*118.8*1.6+/-0.1（不含 FPC 及焊锡厚度）	mm^3
Viewing area (W*H) 可视区域（宽*高）	63.3*111.6	mm^2
Active area (W*H) 有效显示区域（宽*高）	62.1*110.4	mm^2
Pixel size (W*H) 像素大小（宽*高）	0.08625*0.08625	mm^2
Backlight Type 背不类型	LED(white 12*LED)	/
Drive IC 驱动 IC	HX8394F	/
Interface Type 接口类型	MIPI interface	/

2. **EXTERNAL DIMENSIONS**(外形尺寸)

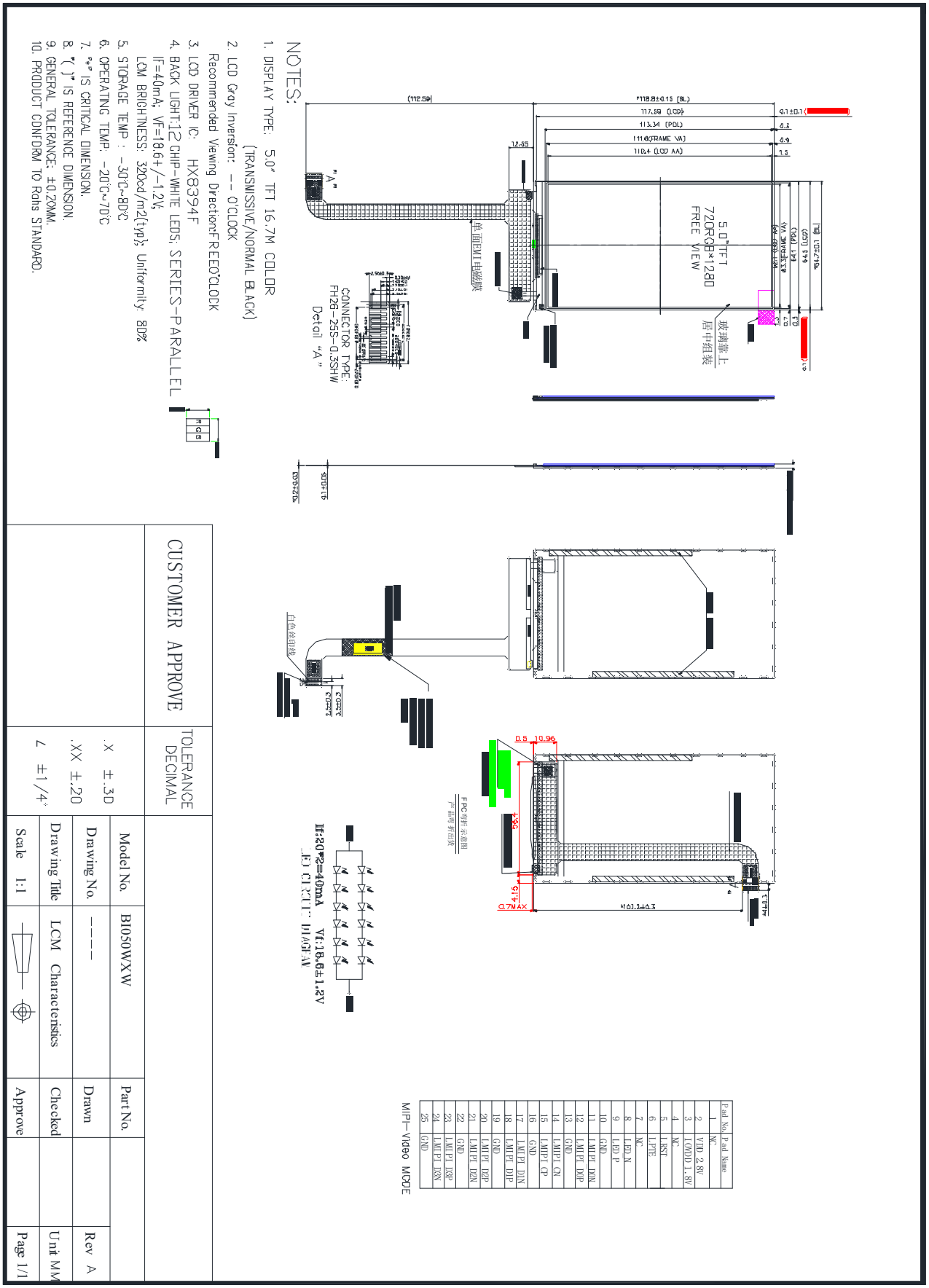

Pad No.	Pad Name
1	NC
2	VDD 2.8V
3	IOVDD 1.8V
4	NC
5	LRST
6	LPTE
7	NC
8	LED_N
9	LED_P
10	GND
11	LMIPI D0N
12	LMIPI D0P
13	GND
14	LMIPI CN
15	LMIPI CP
16	GND
17	LMIPI D1N
18	LMIPI D1P
19	GND
20	LMIPI D2P
21	LMIPI D2N
22	GND
23	LMIPI D3P
24	LMIPI D3N
25	GND

3. ABSOLUTE MAXIMUM RATINGS(极限参数)

Parameter of absolute maximum ratings 参数	**Symbol** 符号	**Min** 最小值	**Max** 最大值	**Unit** 单位	**Remark** 备注
Operating temperature 操作温度	Top	-20	70	˚C	At 25±5˚C
Storage temperature 储存温度	Tst	-30	80	˚C	
Humidity 湿度	RH	/	90%(Max60˚C)	RH	
Power Voltage 电源电压	VDD	-0.3	3.6	V	
	IOVCC				

4. ELECTRICAL CHARACTERISTICS(模块电气特性)

Parameter of DC characteristics 参数	**Symbol** 符号	**Min** 最小值	**Typ** 典型值	**Max** 最大值	**Unit** 单位
Supply voltage for logic 逻辑电压	VDD	2.7	2.8	3.3	V
I/O power supply I/O 口电压	VDDIO	1.65	1.8	3.3	V
Input Current 输入电流	I_{dd}	-	TBD	TBD	mA
Input voltage 'H' level 输入高电平	V_{IH}	0.7*VDDIO	-	VDDIO	V
Input voltage 'L' level 输入低电平	V_{IL}	0	-	0.3*VDDIO	V
Output voltage 'H' level 输出高电平	V_{OH}	0.8*VDDIO	-	VDDIO	V
Output voltage 'L' level 输出低电平	V_{OL}	0	-	0.2*VDDIO	V

5. BACKLIGHT SPECIFICATION(背光电气特性)

Item of backlight characteristics 项目	**Symbol** 符号	**Min** 最小值	**Typ** 典型值	**Max** 最大值	**Unit** 单位	**Condition** 条件
Forward voltage 正向电压	V_f	17.4	18.6	19.8	V	I_f = 40mA
BL Luminance 背光亮度	L_v	8500	9500	-	cd/m²	
Backlight uniformity 均匀度	No less than 80% （不低于 80%）					
Number of LED LED 数量	-	12			Piece	
Connection mode 连接模式	S/P/M	In series-parallel 混联			-	

6. ELECTRO-OPTICAL CHARACTERISTICS(光电参数)

Item of electro-optical characteristics 项目		Symbol 符号	Condition 条件	Min 最小值	Typ 典型值	Max 最大值	Unit 单位	Note 备注
LCM Surface Luminance 模组表面亮度		Lv	--	280	320	--	cd/m^2	Note 4
Contrast Ratio 对比度		CR	--	640	800	--	--	Note 2
Response time 响应时间		Tr+Tf	--	--	20	--	msec	Note 3
Color gamut 色域		S(%)		--	70	--	%	
Color chromaticity (CIE 1931) 色彩饱和度	White	X	θ=0° Ø=0° Ta=25°C	TBD	0.28	TBD		Note 4 Note 5
		Y		TBD	0.32	TBD		
	Red	X		TBD	TBD	TBD		
		Y		TBD	TBD	TBD		
	Green	X		TBD	TBD	TBD		
		Y		TBD	TBD	TBD		
	Blue	X		TBD	TBD	TBD		
		Y		TBD	TBD	TBD		
Viewing angle 视角范围	Ver.	Y+	CR≧10	TBD	80	--	deg	Note 1
		Y-		TBD	80	--		
	Hor.	X-		TBD	80	--		
		X+		TBD	80	--		

Note (1): Definition of Viewing Angle （视角定义）

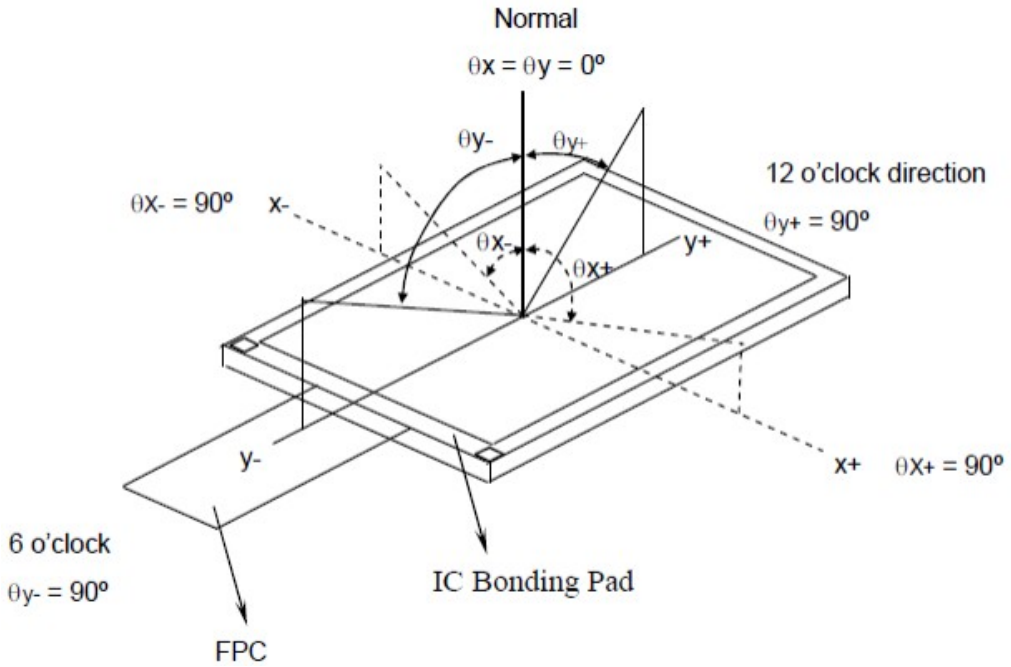

Note (2): Definition of Contrast Ratio(CR) （对比度定义）

Measured point 1 through 5 of panel.（测试 P1 到 P5 的亮度）

$$CR = \frac{\text{Luminance with all pixels white}}{\text{Luminance with all pixels black}} \qquad \text{对比度} = \frac{\text{显示白色画面时平均表面亮度}}{\text{显示黑色画面时平均表面亮度}}$$

Note (3): Definition of Response Time:sum of TR and TF （响应时间定义）

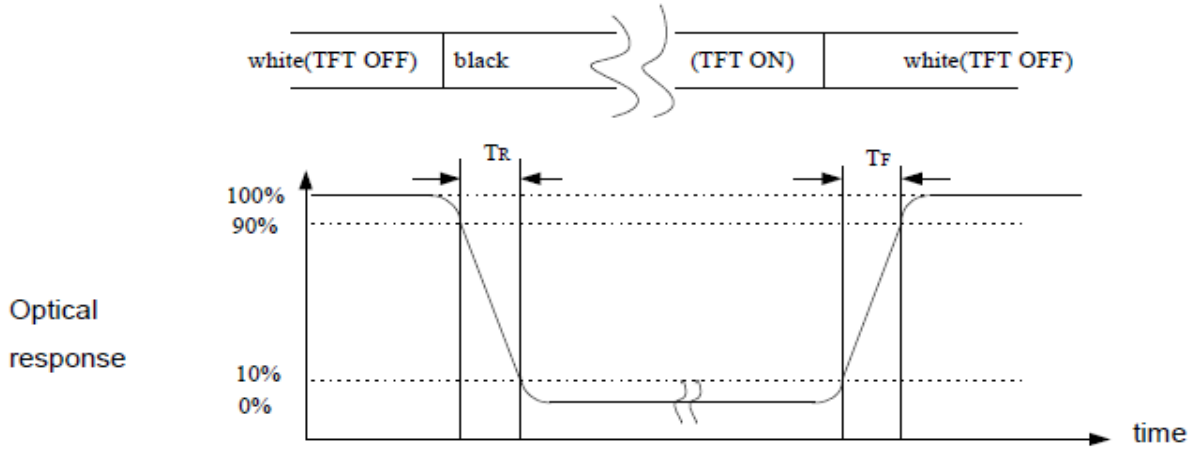

Note (4): Measuring method for Contrast ratio,Surface Luminance,Luminance uniformity, CIE(x,y) Chromaticity （对比度，表面亮度，均匀度，CIE 坐标测试方法）

A : 5 mm
B : 5 mm
H,V : Active Area
Light spot size ∅=5mm, 500mm distance from the LCD surface to detector lens
measurement instrument is TOPCON's luminance meter BM-7

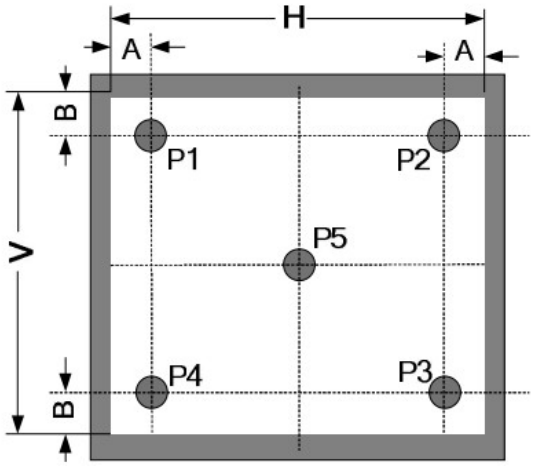

Note (5): CIE(x,y) Chromaticity, The X,Y value is determined by screen active area position 5. （CIE 坐标测试测试点为显示屏中心点 P5）

7. INTERFACE DESCRIPTION(接口定义描述)

Pin No. Pin脚	Symbol 符 号	I/O 输入/出	Description 描 述	When not in use 未使用时的连接
1	NC	-	Not connect	--
2	VDD2.8V	P	Power supply to the internal Analog(2.7V-3.3V)	--
3	IOVDD1.8V	P	Power supply to the internal logic(1.7V-3.3V)	--
4	NC	-	Not connect	--
5	LRSTB	I	Reset signal pin	--
6	LPTE	I	Tearing effect output pin	Open
7	NC	-	Not connect	--
8	LED_N	P	Power supply Cathode input for backlight	--
9	LED_P	P	Power supply Anode input for backlight	--
10	GND	P	Ground	--
11	MIPI_D0N	I	Differential data signals of MIPI interface	Gnd
12	MIPI_D0P	I	Differential data signals of MIPI interface	Gnd
13	GND	P	Ground	--
14	MIPI_CN	I	Differential clock signals of MIPI interface	Gnd
15	MIPI_CP	I	Differential clock signals of MIPI interface	Gnd
16	GND	P	Ground	--
17	MIPI_D1N	I	Differential data signals of MIPI interface	Gnd
18	MIPI_D1P	I	Differential data signals of MIPI interface	Gnd
19	GND	P	Ground	--
20	MIPI_D2P	I	Differential data signals of MIPI interface	Gnd
21	MIPI_D2N	I	Differential data signals of MIPI interface	Gnd
22	GND	P	Ground	--
23	MIPI_D3P	I	Differential data signals of MIPI interface	Gnd
24	MIPI_D3N	I	Differential data signals of MIPI interface	Gnd
25	GND	P	Ground	--

8. TIMING CHARACTERIST（时序特征）

8.1 Vertical timings

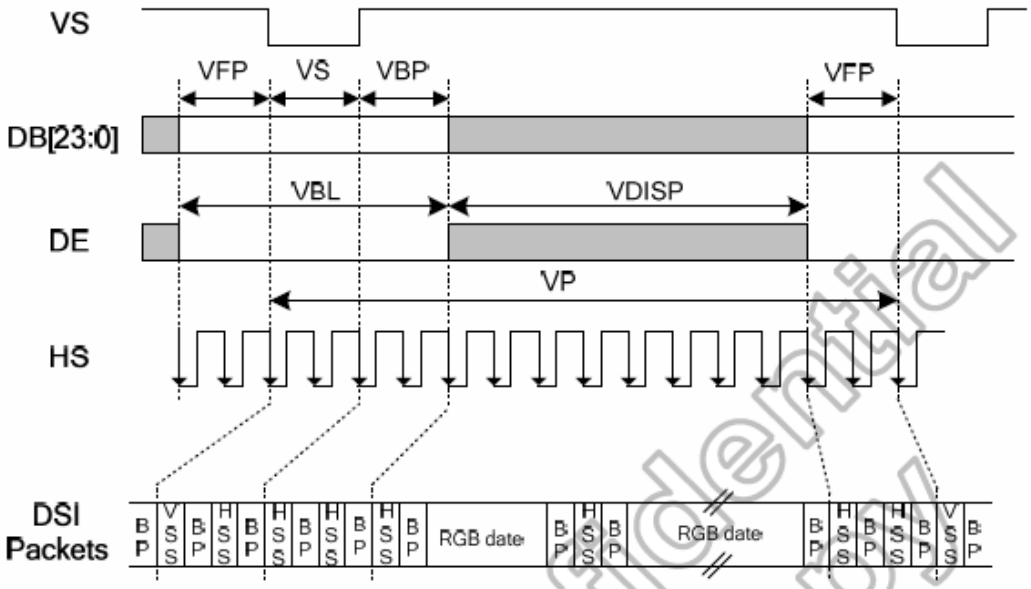

Figure 7.9: Vertical timings for DSI I/F

Resolution=720x1280(VSSA=0V, VDD1=1.8V, VDD2=2.8V, VDD3=2.8V, T_A=25℃)

Parameter	Symbol	Condition	Spec.			Unit
			Min.	Typ.	Max.	
Vertical cycle	VP	-	1286	-	-	Line
Vertical low pulse width	VS	-	2	-	Note(1)	Line
Vertical front porch	VFP	-	2	-	-	Line
Vertical back porch	VBP	-	2	-	Note(1)	Line
Vertical data start point	-	VS+VBP	4	-	Note(1)	Line
Vertical blanking period	VBL	VS+VBP+VFP	6	-	-	Line
Vertical active area	-	VDISP	-	1280	-	Line
Vertical Refresh rate	VRR	-	-	60	-	Hz

Note: (1) The VS/VBP/VFP pulse width are related to RD3h (Set GIP Option0). Please refer to the application note for VS/VBP/VFP setting.

Table 7.13: Vertical timings for DSI I/F

Himax Confidential Do Not Copy

8.2 Horizontal timings

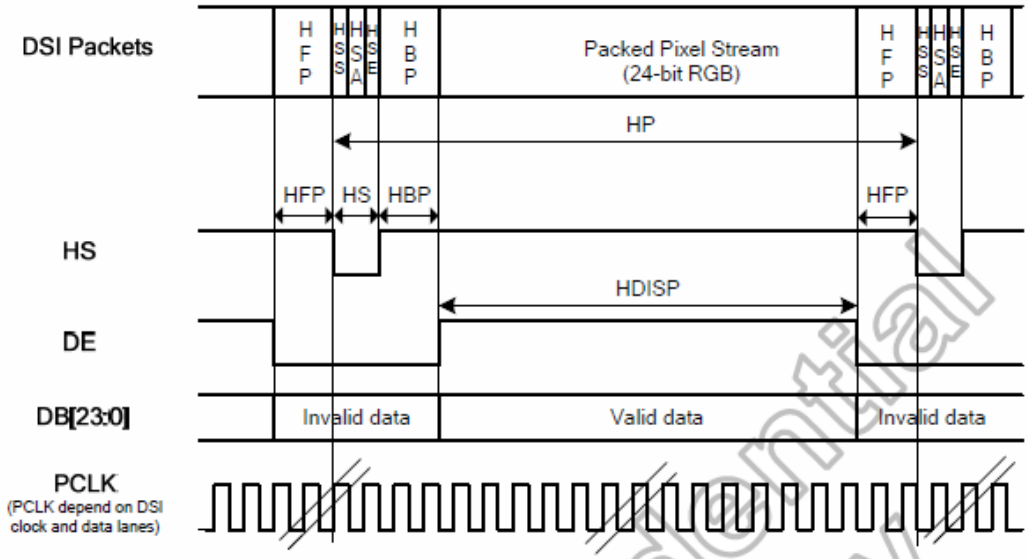

Figure 7.10: Horizontal timing for DSI video mode I/F

Resolution=720x1280 (VSSA=0V, VDD1=1.8V, VDD2=VDD3=VCC=2.8V, T_A=25℃)

Parameter	Symbol	Condition	Spec.			Unit
			Min.	Typ.	Max.	
Horizontal cycle	HP	-	762	-	-	DCK
HS low pulse width	HS	-	6	-	-	DCK
Horizontal back porch	HBP	-	24	-	-	DCK
Horizontal front porch	HFP	-	12	-	-	DCK
Horizontal data start point	-	HS+HBP	30	-	-	DCK
Horizontal blanking period	HBLK	HS+HBP+HFP	12	-	-	DCK
Horizontal active area	HDISP	-	-	720	-	DCK

Note: (1) HS > 0.2us (12-DCK @ 352.8Mbps /4-lane, Frame rate 60Hz, min DSI CLK rate)
(20-DCK @ 550Mbps /4-lane, Frame rate 60Hz, max DSI CLK rate)
(2) HBP > 0.4us (24-DCK @ 352.8Mbps /4-lane, Frame rate 60Hz, min DSI CLK rate)
(40-DCK @ 550Mbps /4-lane, Frame rate 60Hz, max DSI CLK rate)
(3) HFP > 0.2us (12-DCK @ 352.8Mbps /4-lane, Frame rate 60Hz, min DSI CLK rate)
(20-DCK @ 550Mbps /4-lane, Frame rate 60Hz, max DSI CLK rate)

Table 7.14: Horizontal timings for DSI video mode I/F

Himax Confidential
Do Not Copy

8.3 REST Timing Characteristics

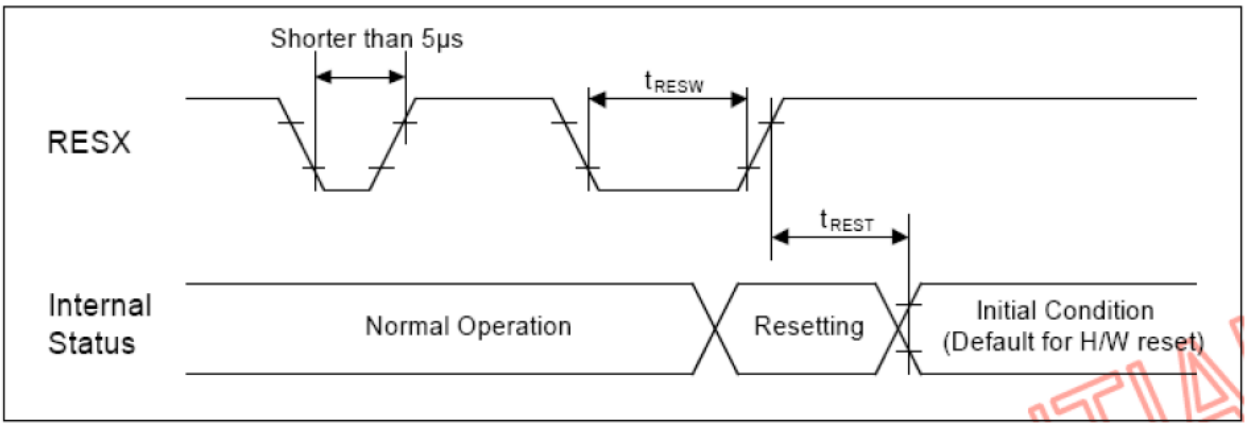

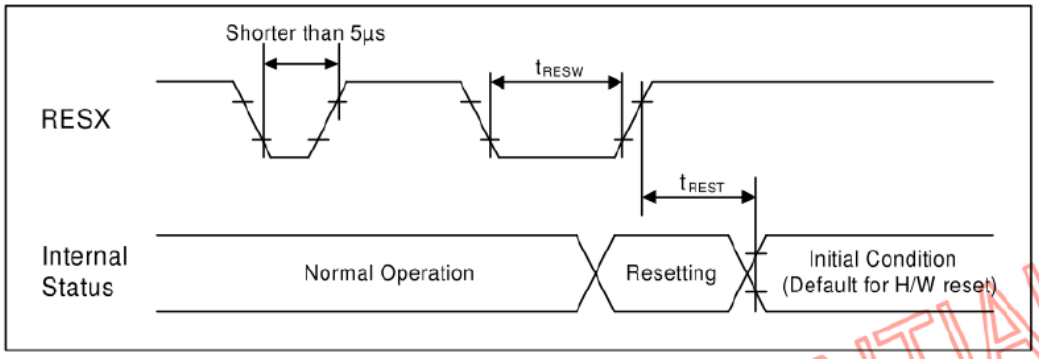

Fig. 7.6.12 Reset input timing

(VSS=VSSI=DVSS=0V, VDDI=1.65V to 3.3V, VDD=2.3V to 5.0V,Ta = -30 to 70˚C)

Signal	Symbol	Parameter	MIN	TYP	MAX	Unit	Description
RESX	tRESW	Reset "L" pulse width (Note 1)	10	-	-	μs	
	tREST	Reset complete time (Note 2)	-	-	5	ms	When reset applied during Sleep In Mode
			-	-	120	ms	When reset applied during Sleep Out Mode

Note 1) Spike due to an electrostatic discharge on RESX line does not cause irregular system reset according to the table below.

RESX Pulse	*Action*
Shorter than 5μs	*Reset Rejected*
Longer than 10μs	*Reset*
Between 5μs and 10μs	*Reset Start*

Note 2) During the resetting period, the display will be blanked (The display is entering blanking sequence, which maximum time is 120 ms, when Reset Starts in Sleep Out –mode. The display remains the blank state in Sleep In–mode) and then return to Default condition for H/W reset.

Note 3) During Reset Complete Time, values in OTP memory will be latched to internal register during this period. This loading is done every time when there is H/W reset complete time (t_{REST}) within 5ms after a rising edge of RESX.

Note 4) Spike Rejection also applies during a valid reset pulse as shown below:

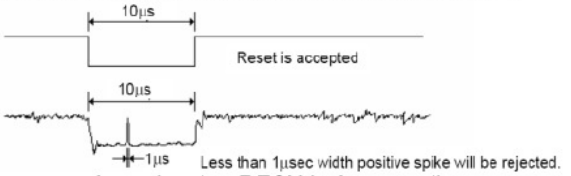

Note 5) It is necessary to wait 5msec after releasing RESX before sending commands. Also Sleep Out command cannot be sent for 120msec

NOVATEK CONFIDENTIAL
NO DISCLOSURE

ALL RIGHTS STRICTLY RESERVED. ANY PORTION OF THIS PAPER SHALL NOT BE REPRODUCED, COPIED, OR TRANSFORMED TO ANY OTHER FORMS WITHOUT PERMISSION FROM AU OPTRONICS CORP.

9. RELIABILITY TEST CONDITIONS(可靠性实验条件)

NO. 序号	**Test Item** 实验项目	Test Condition 实验条件	Inspection after test 判定标准
1	High Temperature Storage 高温存放	80±2˚C,96 hours	Inspection after 2~4 hours storage at room temperature, the sample shall be free from defects.（试验结束后须正常室温存放 2~4 个小时之后才能测试判定，不允许有以下缺陷） 1. Air bubble in the LCD（模块中有气泡）; 2. Seal leak（漏液）; 3. Non-display（不显示）; 4. Missing segments(漏笔); 5. Glass crack（玻璃破碎）; 6. Current IDD is twice higher than initial value（电流 Idd 大于初时值的 2 倍）; 7. The surface damage（表面损伤）; 8. Do not meet the electrical characteristics（不满足模块电气性能）;
2	Low Temperature Storage 低温存放	-30±2˚C,96 hours	
3	High Temperature Operating 高温操作	70±2˚C,96 hours	
4	Low Temperature Operating 低温操作	-20±2˚C,96 hours	
5	Damp proof Test Storage 高温高湿存放	60±2˚C,90%RH,96 hours	
6	Damp proof Test Operating 高温高湿操作	40±2˚C,90%RH,96 hours	
7	Temperature Cycle Storage 冷热循环存放	-20±2˚C(30min) ~ 25˚C(5min) ~ 80±2˚C(30min), 10Cycle.	
8	Vibration Test 振荡试验	Frequency（频率）:10HZ-55Hz , Amplitude（振幅）:1.5mm , x,y,z every direction for 1 hour (Packing condition) （包装状态，X,Y,Z 每个方向各 1 小时）	
9	Dropping Test 跌落试验	Drop to the ground from 1M height, one time, every side of carton (Packing condition)（包装状态，一米高度，6 面各一次）	
10	ESD Test 静电测试	C:150pf; R:330Ω; Voltage:8KV; Air discharge(空气放电),10 time	

Remark（备注）:

1. The samples should be applied to only on test item(每个被测试样品只能用于其中的一个测试项目);
2. Sample size for each teat item is 5~10 pcs(每个测试项目的样品数量为 5~10 片);
3. For Damp Proof Test,Pure water(Resistance>10M Ω)should be used（对于防潮试验，试验箱的用水必须是电阻大于 10M 欧姆的纯水）;
4. In case of malfunction defect caused by ESD damage,if it would be recovered to normal state after resetting ,it would be judged as a good part（如果由静电引起产品故障，当放置一段时间后能够恢复正常，则不视为产品缺陷）;
5. Failure Judgment Criterion:Basic Specification ,Electrical Characteristic, mechanical Characteristic, Optical Characteristic（故障判断标准：基本规格，电气特性，机械特性，光电特性）.

10. INSPECTION CRITERION(检查标准)

1. **Sample plan**(检验方案)

Sampling plan according to GB/T2828.1-2003/ISO 2859-1:1999 and ANSI/ASQC Z1.4-1993,normal level 2 and based on: 参考国标 GB T2828.1-2003 等，2 级检验水准。

Major defect（重缺陷）: AQL 0.4

Minor defect（轻缺陷）: AQL 1.0

2. **Inspection condition**(检查条件)

Viewing distance for cosmetic inspection is about 30cm with bare eyes,and under an environment of 20~40W light intensity,all directions for inspecting the sample should be within 45° against perpendicular line.

目视被检产品 30cm,在 20 至 40W 的日光灯环境下，检视角为 LCD 平面法线±45° 以内。

3. **Definition of inspection zone in LCD**（检查范围定义）.

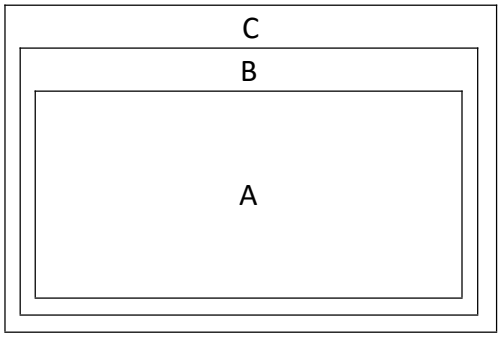

Zone A: character/Digit area 显示区域

Zone B: viewing area except Zone A (Zone A+Zone B=minimum Viewing area)

显示区域外的可视区域（区域 A+B 等于最小可视区域）

Zone C: outside viewing area(invisible area after assembly in customer's product)

非可视区，客户装机后不能观察到的区域

Note：As a general rule ,visual defects in Zone C are permissible, when it is no trouble for quality and assembly of customer's product.

一般情况下，非可视区的外观缺陷在不影响质量和客户装机时是允许的。

4. **Inspection Standard**（检查标准）

4.1 Major Defect（重缺陷）

NO. 序号	Items to be inspected 检查项目	Inspection Standard 检查标准	Classification of defects 缺陷级别
4.1.1	All functional defects 全部功能缺陷	1. no display 不显示 2. Display abnormally 显示异常 3. Missing vertical,horizontal segment 缺线 4. Short circuit 短路 5. Back-light no lighting,flickering and abnormal lighting 背光不亮、闪动、异显 6. Touch panel no function 触摸屏无功能	Major defect （重缺陷）
4.1.2	Missing 掉落	Missing component 零件掉落	
4.1.3	Outline dimension 外形尺寸	Overall outline dimension beyond the drawing is not allowed 外形尺寸超过图纸允许范围	

4.2 Cosmetic Defect（外观缺陷）

NO. 序号	Items to be inspected 检查项目	Inspection Standard 检查标准	Classification of defects 缺陷级别
4.2.1	Clear Spots 明显点 Black and white Spot defect pinhole, Foreign Particle, Dirt under polarizer or TP 黑白点，针孔，异物点，偏光片污点，TP 污点	For dark/white spot, size Φ is defined as Φ=(x+y)/2. 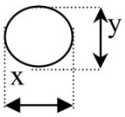	Minor defect （轻缺陷）

Size(mm) \ Zone	Acceptable Qty A	Acceptable Qty B	Acceptable Qty C
Φ≤0.10	Ignore		Ignore 忽略不计
0.10<Φ≤0.15	2		
0.15<Φ≤0.2	1		
Φ>0.2	0		

4.2.2	Touch panel Newton ring/ Interference lines 触摸屏牛顿环、干涉线	1. Regular 规则 S≤5mm 允许 1 个 2. Irregular 不规则 S≤1/6 TP area 允许 1 个	When makes the text distortion or linear deformation, are not allowed. 当使文字失真或直线变形时均不允许	Minor defect （轻缺陷）
4.2.3	Line defect 线缺陷 Black line,White line, Foreign material under polarizer 黑白线，偏光片异物	Defined: L line length; W line width		Minor defect （轻缺陷）

Size(mm) Width	Size(mm) Length	Acceptable Qty A	Acceptable Qty B	Acceptable Qty C
W≤0.02	Ignore	Ignore		Ignore 忽略不计
0.02< W≤0.03	L≤3.0	2		
0.03< W≤0.04	L≤2.0	1		
W≥0.04	Define as spot defect			

<table>
<tr><th>NO.
序号</th><th>Items to be inspected
检查项目</th><th>Inspection Standard
检查标准</th><th>Classification of defects 缺陷级别</th></tr>
<tr><td>4.2.4</td><td>Polarize scratch
偏光片划伤</td><td>
If the Polarizer scratch can be seen after mobile phone cover assembling or in the operating condition,judge by the line defect of 4.2.3,(片划伤可以在客户组装后或操作状态下按 4.2.3 标准进行判定)
If the Polarizer scratch can be seen only in non-operating condition or some special angle, judge by the following（如片划伤只能在非操作状态下或某个角度可见，则按以下标准判定）
<table>
<tr><th colspan="2">Size(mm)</th><th colspan="3">Acceptable Qty</th></tr>
<tr><th>Width</th><th>Length</th><th>A</th><th>B</th><th>C</th></tr>
<tr><td>W≤0.02</td><td>Ignore</td><td colspan="2">Ignore</td><td rowspan="4">Ignore
忽略不计</td></tr>
<tr><td>0.02< W≤0.03</td><td>2.0<L≤5.0</td><td colspan="2">2</td></tr>
<tr><td>0.03< W≤0.05</td><td>L≤2.0</td><td colspan="2">1</td></tr>
<tr><td>W≥0.05</td><td></td><td colspan="2">0</td></tr>
</table>
</td><td>Minor defect
（轻缺陷）</td></tr>
<tr><td>4.2.5</td><td>Polarize Air bubble,TP Film bubble
偏光片气泡,TP 菲林气泡（鱼眼）</td><td>
Air bubbles between glass & polarizer 玻璃与片之间
<table>
<tr><th colspan="2">Zone
Size(mm)</th><th colspan="3">Acceptable Qty</th></tr>
<tr><th></th><th>A</th><th>B</th><th>C</th></tr>
<tr><td colspan="2">Φ≤0.15</td><td colspan="2">Ignore</td><td rowspan="4">Ignore
忽略不计</td></tr>
<tr><td colspan="2">0.15<Φ≤0.25</td><td colspan="2">2</td></tr>
<tr><td colspan="2">0.25<Φ≤0.30</td><td colspan="2">1</td></tr>
<tr><td colspan="2">Φ>0.30</td><td colspan="2">0</td></tr>
</table>
</td><td>Minor defect
（轻缺陷）</td></tr>
<tr><td rowspan="3">4.2.6</td><td rowspan="3">Glass defect
玻璃缺陷</td><td>
1. Chips on corner（崩角）
<table>
<tr><th>X</th><th>Y</th><th>Z</th></tr>
<tr><td>≤3</td><td>≤S</td><td>≤T</td></tr>
</table>
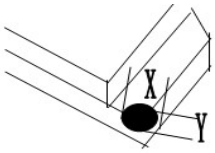

Remark: S= contact pad length;
T= the thickness of glass
</td><td>Minor defect
（轻缺陷）</td></tr>
<tr><td>
2. Usual surface cracks
(一般边崩)
<table>
<tr><th>X</th><th>Y</th><th>Z</th></tr>
<tr><td>≤3</td><td><S</td><td>Ignore</td></tr>
</table>
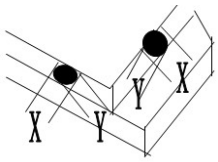

Remark: S= Inner border line of the seal;
S= 玻璃内部边缘环氧框
</td><td>Minor defect
（轻缺陷）</td></tr>
<tr><td>
3. Crack
(裂纹)
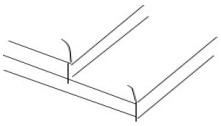
Cracks tend to break are not allowed
任何区域向内延伸的裂纹都不允许
</td><td>Major defect
（重缺陷）</td></tr>
</table>

11. PRECAUTIONS FOR USING LCD MODULES(使用注意事项)

11.1 Using LCD Modules 使用

11.1.1 As glass is fragile, It tends to become or chipped during handling especially on the edges. Please avoid dropping or jarring. Do not subject it to a mechanical shock by dropping it or impact.（由于玻璃是脆的，使用过程请特别注意边缘区，防止跌落或振动，不能机械碰撞）。

11.1.2 Do not apply excessive force to the display surface or the adjoining ares since this may cause the color tone to vary. Do not touch the display with bare hands. This will stain the display area and degraded insulation between terminals(some cosmetics are determined to the polarizer)（请勿施加过大的压力于显示屏或连接部位，否则会引起色调变化。不要裸手接触显示屏，这将弄脏显示区和降低端子之间的绝缘能力。一些外观问题是由偏光片决定的）。

11.1.4 The polarizer covering the display surface of the LCD module is soft and easily scratched. Handle this polarizer carefully. Do not touch, push or rub the exposed polarizers with anything harder than an HB pencil lead (glass, tweezers, etc.). Do not put or attach anything on the display area to avoid leaving marks on it. Condensation on the surface and contact with terminals due to cold will damage, stain or dirty the polarizer. After products are tested at low temperature they must be warmed up in a container before coming in to contact with room temperature air.（ 覆盖液晶显示模块显示平面的偏光片是软性且易被擦伤，请小心轻拿。请勿用任何硬度大于 HB 铅笔芯的物品（玻璃，镊子等） 接触、撞压或摩擦裸露偏光片。不要放置或粘附物体在显示区域上以免留下痕迹。冷凝在表面和端子将会损坏或弄脏偏光片。产品在低温下测试之后，与室温空气接触之前必须在容器内升温）

11.1.5 If the display surface becomes contaminated, breathe on the surface and gently wipe it with a soft dry cloth. If it is heavily contaminated, moisten cloth with one of the following solvents: Isopropyl alcohol; Ethyl alcohol . Do not scrub hard to avoid damaging the display surface(如果显示平面受污，可对平面吹热气且轻轻地用软性干布擦除。如果受污严重，用含下列一种溶剂的湿布擦除： 甘油，酒精 。请勿用力擦拭以免损坏显示平面。）

11.1.6 Solvents other than those above-mentioned may damage the polarizer. Especially, do not use the following: Water, Ketone, Aromatic solvents. Wipe off saliva or water drops immediately, contact with water over a long period of time may cause deformation or color fading. Avoid contact with oil and fats. （除以上提到的溶剂外，其他溶剂可能会损坏偏光片，特别要避免使用以下溶剂： 水，丙酮，芳烃溶剂。立即擦掉唾液或水滴，长时间与水接触会引起变形或褪色。避免接触油和油脂）

11.1.7 Do not attempt to disassemble or process the LCD module. （请勿拆卸液晶显示模块）

11.1.8 Electro-Static Discharge Control, Since this module uses a CMOS LSI, the same careful attention should be paid to electrostatic discharge as for an ordinary CMOS IC. To prevent destruction of the elements by static electricity, be careful to maintain an optimum work environment. （由于液晶显示模块使用 CMOS 集成，要特别注意静电放电问题。对 CMOS 器件，要特别注意静电。为防止静电损坏，注意保持合宜的工作环境）

11.1.9 Input logic voltage before apply analog high voltage such as LCD driving voltage when power on. Remove analog high voltage before logic voltage when power off the module. Input each signal after the positive/negative voltage becomes stable. （开机时，先让逻辑电压，再接通模拟高压， 如显示屏驱动电压。关机时，先断开模拟高压，再关逻辑电压。正负电源都稳定后再送控制信号。）

11.1.10 In the use of connector products, the operating process of attention to turn off the power before pull off and insert action. To avoid damage to the module (在使用连接器的产品时，插接过程注意先关闭电源再进行拔插动作，避免损坏模块)

11.1.11 When use LENS ,you must be do the following things（当使用假纯平 TP 结构时，注意须按以下方法处理：LENS 的双面胶避开 RTP 的 FPC 热压位，或在热压位上加贴保护膜，避免 LENS 双面胶拉动 FPC 造成损伤而无触摸）

A:

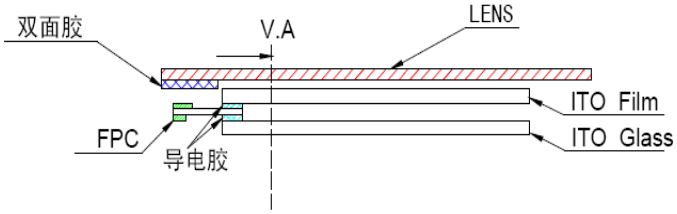

B:

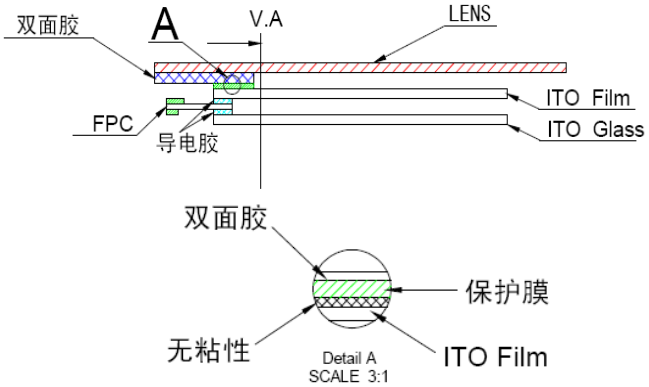

11.1.12 Precaution for assemble the module with BTB connector:
Please note the position of the male and female connector position, don't assemble or assemble like the method which the following picture shows
（用板对板连接器安装液晶显示模块注意事项： 请注意连接器的公母及连接位置，请勿出现下图所示的连接方式。）

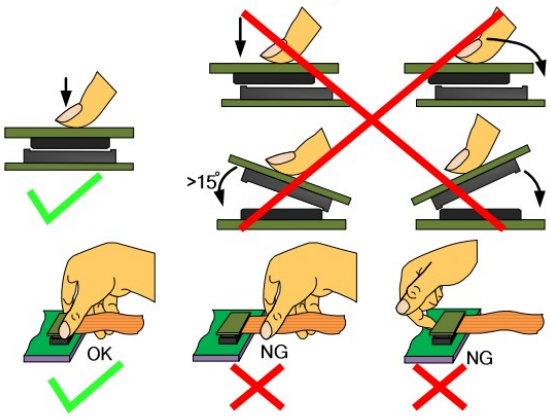

11.2 Storage Modules 储存

11.2.1 Store them in a dark place. Do not expose to sunlight or fluorescent light, keep the temperature between 0°C and 35°C, and keep the relative humidity between 40%RH and 60%RH. （避光保存，避免直接暴露在太阳光或黄光灯下，保持温度在 0~35 摄氏度之间，保持相对湿度在 40%RH 和 60%RH 之间。）

11.2.2 The polarizer surface should not come in contact with any other objects (We advise you to store them in the anti-static electricity container in which they were shipped). （偏光片表面避免接触其他物质，建议存放在货运防静电包装中）

11.3 Soldering

11.3.1 Iron head temperature（铬铁头实际温度）: 350±10˚C，Soldering time（焊接时间）: <3-4S. Soldering don't repeat above 3 times（焊接次数勿超过 3 次）

11.3.2 If soldering flux is used, be sure to remove any remaining flux after finishing to soldering operation (This does not apply in the of a non-halogen type of flux). It is recommended that you protect the LCD surface case with a cover during soldering to prevent any damage due to flux spatters. （如果使用助焊剂，完成焊接后一定要清除剩余的助焊剂（除非卤化物助焊剂）。建议焊接时用盖子保护显示屏面以避免因焊剂油溅出造成的任何损坏。）

12 **PRIOR CONSULT MATTER** (提前商议事项)

12.1 For standard products, we keep the right to change material, process ... for improving the product property without prior notice to our customer.
（对于思坦德的标准模块产品，我们保留在不通知客户的情况下,为提高产品性能而改变原材料及加工方法等的权利。 ）

12.2 For OEM products, if any changes are needed which may affect the product property, we will consult with our customer in advance.
（对于 OEM 产品，如果需要做任何会影响到产品性能的改变，我们会提前和客户商议。

12.3 If you have special requirement about reliability condition, please let us know before you start the design on our samples.
（如对可靠性条件有特殊要求，请在模块设计开发前通知我们。）