Product Specification

Part Name: 7.00 inch TFT Display Module

Customer Part ID: BI070B4F

Revision History

Rev.	Date	Contents	Written	Approved
B	2019/04/30	Renew FPC,increase BL brightness	Sam	Kevin

Special Notes

Note1.	

Contents

1.0 General description

1.1 Introduction

BI070B4F VerB is model a color active matrix thin film transistor (TFT) liquid crystal display (LCD) that uses amorphous silicon TFT as a switching device. This model is composed of a TFT LCD panel, a driving circuit and a back light system. This TFT LCD has a 7.0(16:9) inch diagonally measured active display area with WSVGA (1024horizontal by 600 vertical pixel array) resolution. The TFT-LCD panel used for this module is adapted for a low reflection and higher color type.

1.2 Features

- **TTL Interface**
- Data enable signal mode
- 24-bit color depth,display 16.7M colors
- Low driving voltage and low power consumption
- ROHS Compliant

1.3 General information

Item	Specification	Unit	Remarks
Outline Dimension	164.86(H) x 99.96(V) x3.5(body)	mm	Tolerance:±0.2mm
Display area	154.21(W) x85.92(H)	mm	
Number of Pixel	1024(H) x 600(V)	pixels	
Pixel pitch	0.1506(H) x 0.1432(V)	mm	
Pixel arrangement	Pixels RGB stripe arrangement		
Display mode	Normally Black		
Surface treatment	IPS Film		
Weight	TBD (Typ.)	gram	
Back-light	Single LED (Side-Light type)		

1.4 Mechanical Information

Item		Min.	Typ.	Max.	Unit
Module Size	Horizontal(H)	164.66	164.86	165.06	mm
	Vertical(V)	99.76	99.96	100.16	mm
	Depth(D)	3.3	3.5	3.7	mm

2.0 ABSOLUTE MAXIMUM RATINGS

2.1 Electrical Absolute Rating

2.1.1 TFT LCD Module

Item	Specification	Unit
Outline Dimension	164.86(H) x 99.96(V) x3.5(body)	mm
Display area	154.21(W) x85.92(H)	mm
Number of Pixel	1024(H) x 600(V)	pixels
Pixel pitch	0.1506(H) x 0.1432(V)	mm
Pixel arrangement	Pixels RGB stripe arrangement	
Display mode	Normally Black	
Surface treatment	IPS Film	
Weight	TBD (Typ.)	gram
Back-light	Single LED (Side-Light type)	

2.1.2 Back-Light Unit

Item	Symbol	Typ	MIN.	TYP.	MAX.	Unit	Note
Forward voltage	Vf	9.3	8.7	9.3	9.5	V	(1)(2)
Forward current	If	180	--	--	--	mA	(1)(2) (3)
Power Consumption	PBL	--	--	--	--	mW	

Note:

(1) Permanent damage may occur to the LCD module if beyond this specification. Functional operation should be restricted to the conditions described under normal operating conditions.

(2) Ta =25±2℃

(3) Test Condition: LED current 180 mA

3.0 OPTICAL CHARACTERISTICS

3.1 Optical Specifications

Item	Symbol	Temp	Condition	Min	Typ	Max	Unit	Remark
Viewing Angle range	Horizontal	θ	CR > 10	80	85	--	Deg	Note 1
	Vertical	θ		80	85	--	Deg	
Luminance Contrast ratio		CR	θ = 0°	600：1	800：1	--	--	Note 2
Brightness		YL		280	300	--	Cd/cm2	
Transmittance		T(%)	θ = 0°	--	5.0	--	%	Note 3
Color Gamut (C light)				45	50	--	%	
White chromaticity		Xw	Θ=0°	TYP. -0.03	0.3030	TYP. +0.03		Note 4
		Yw			0.333			
Reproduction of color （C-light）	Red	Rx			0.618			
		Ry			0.326			
	Green	Gx			0.285			
		Gy			0.539			
	Blue	Bx			0.146			
		By			0.148			
Response Time (Rising + Falling)	Trt		Ta= 25°C θ = 0°					
				--	25	40	ms	Note 5

3.2 Measuring Condition

Measuring surrounding: dark room ,LED current IL : 180mA

Ambient temperature: 25±2℃

15min. warm-up time.

3.3 Measuring Equipment

FPM520 of Westar Display technologies, INC., which utilized SR-3 for Chromaticity and BM-5A for other optical characteristics. Measuring spot size: 20 ~ 21 mm

Note (1) Definition of Viewing Angle :

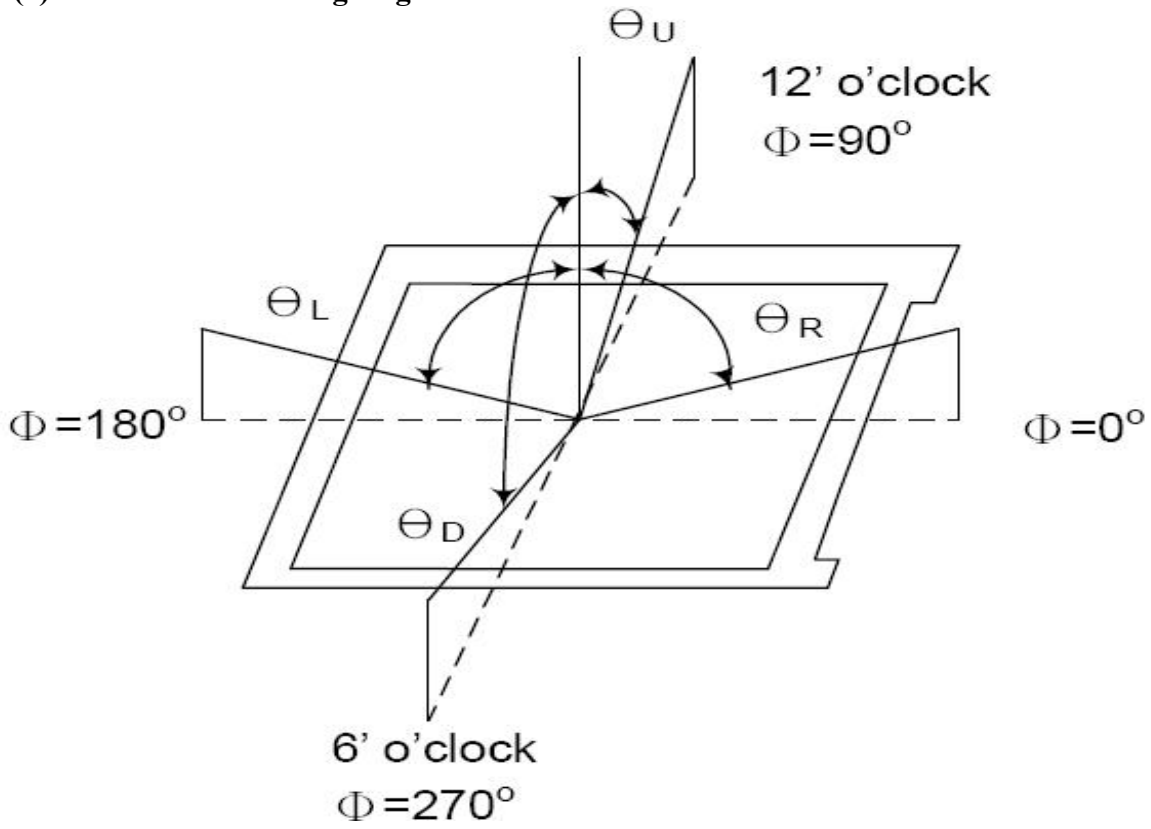

Note (2) Definition of Contrast Ratio (CR):
Measured at the center point of panel

$$CR = \frac{\text{Luminance with all pixels white}}{\text{Luminance with all pixels black}}$$

Note (3) Definition of Response Time: Sum of TR and TF

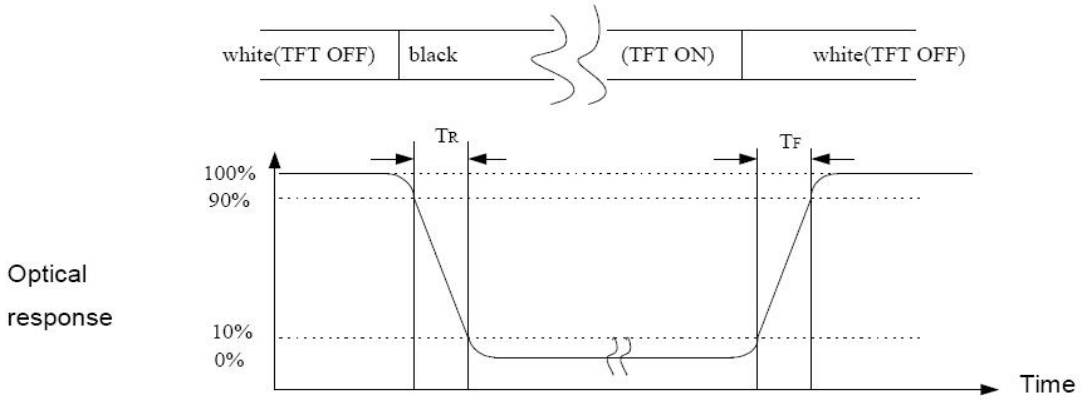

Note (4) Definition of optical measurement setup

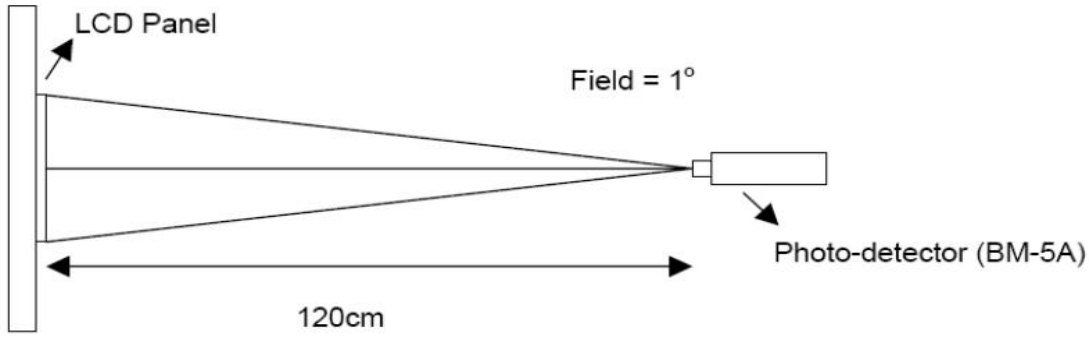

Note (5) Definition of brightness uniformity

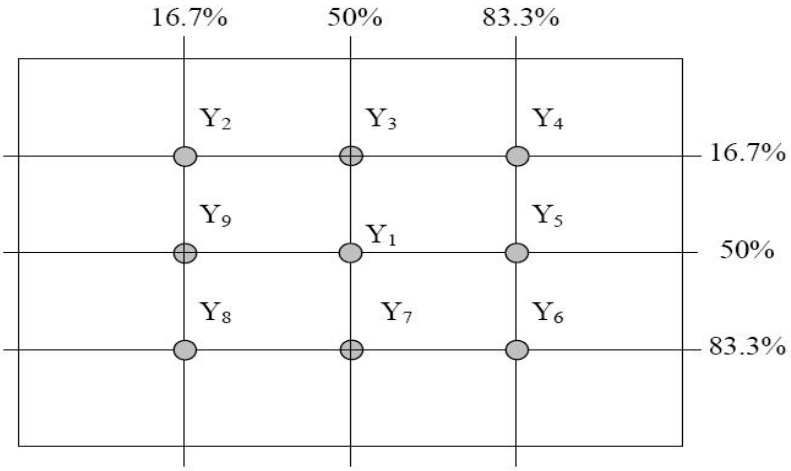

$$\text{Luminance uniformity} = \frac{\text{(Min Luminance of 9 points)}}{\text{(Max Luminance of 9 points)}} \times 100\%$$

4.0 INTERFACE PIN CONNECTION

4.1 Signal of interface

Terminal No.	Symbol	IO	Functions
1--2	VLED+	P	Power for LED backlight (Anode)
3--4	VLED-	P	Power for LED backlight (Cathode)
5	GND	P	Analog Ground
6	VCOM	I	Common voltage
7	DVDD	P	Power for Digital Circuit
8	MODE	I	DE/SYNC mode select
9	DE	I	Data Input Enable
10	VS	I	Vertical Sync Input
11	HS	I	Horizontal Sync Input
12	B7	I	Blue data(MSB)
13	B6	I	Blue data
14	B5	I	Blue data
15	B4	I	Blue data
16	B3	I	Blue data
17	B2	I	Blue data
18	B1	I	Blue data
19	B0	I	Blue data(LSB)
20	G7	I	Green data(MSB)
21	G6	I	Green data
22	G5	I	Green data
23	G4	I	Green data
24	G3	I	Green data
25	G2	I	Green data
26	G1	I	Green data
27	G0	I	Green data (LSB)
28	R7	I	Red data(MSB)
29	R6	I	Red data
30	R5	I	Red data
31	R4	I	Red data
32	R3	I	Red data
33	R2	I	Red data
34	R1	I	Red data
35	R0	I	Red data(LSB)
36	GND	P	Power Ground
37	DCLK	I	Sample clock
38	GND	P	Power Ground
39	L/R	I	Left / right selection
40	U/D	I	Up/down selection
41	VGH	P	Gate ON Voltage
42	VGL	P	Gate OFF Voltage
43	AVDD	P	Power for Analog Circuit
44	RESET	I	Global reset pin.

45	NC	-	No connection
46	VCOM	I	Common Voltage
47	DITHB	I	Dithering function
48	GND	P	Power Ground
49	NC	-	No connection
50	NC	-	No connection

5.0 Power On/Off Sequence

To prevent the device damage from latch up,the power on/off sequence shown Below must be followed.

Power on: VDD , GND→AVDD , AGND→V1-V14

Power on: V1-V14→AVDD , AGND→VDD,GND

5.1 Power on/off control

- **power on/off timing sequence**

5.2 Enter and exit standby mode sequence

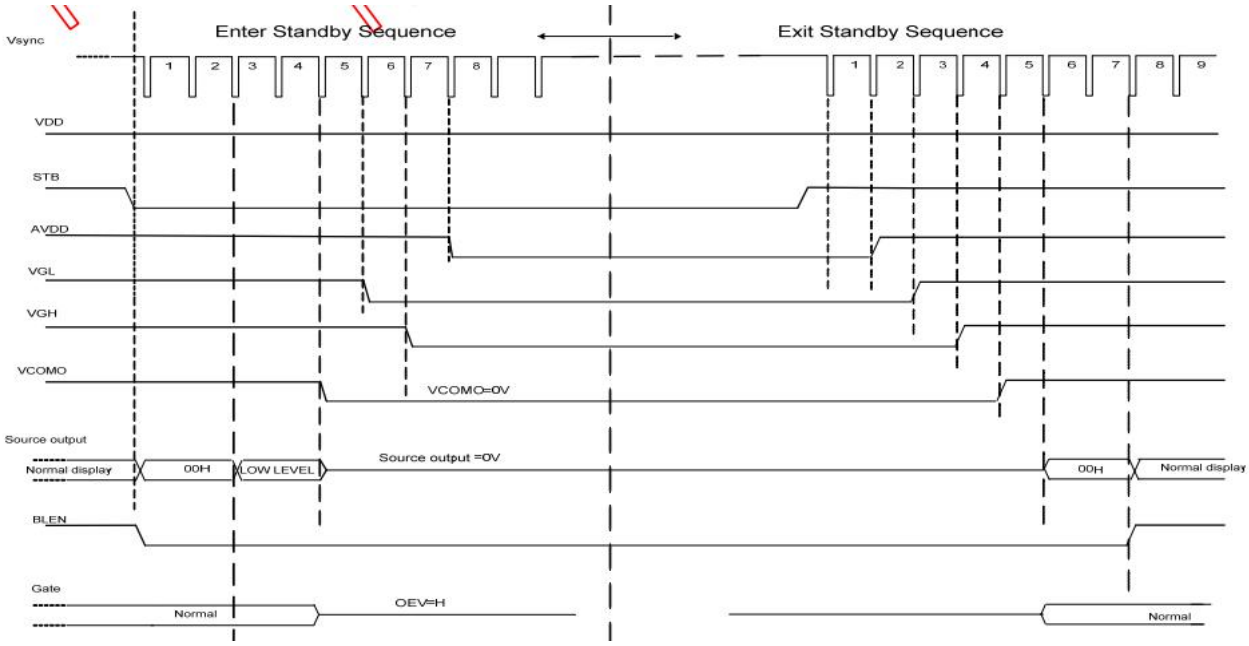

6.0 ELECTRICAL CHARACTERISTICS

6.1 TFT LCD Module

Parameter	Symbol	Min	Typ	Max	Unit
Supply Voltage	VDD	3.0	3.3	3.6	V
	VGH	17	18	19	V
	VGL	-7.5	-6.5	-5.5	V
	AVDD	9.4	9.6	10.2	V
VCOM	VCOM	3.0	(3.2)	3.6	V

Note:

(1) VGH is TFT Gate operating voltage.

(2) VGL is TFT Gate operating voltage. The low voltage level of VGH signal must be fluctuates with same phase as Vcom.

6.2 Back-Light Unit

The backlight system is an edge-lighting type with 27LED.

The characteristics of the LED are shown in the following tables.

Item	Symbol	Min.	Typ.	Max.	Unit	Note
LED current	IL	-	180	-	mA	(2)
LED Voltage	VL	-	9.3	-	V	
Operating LED life time	Hr	20000	-	-	Hour	(1)(2)

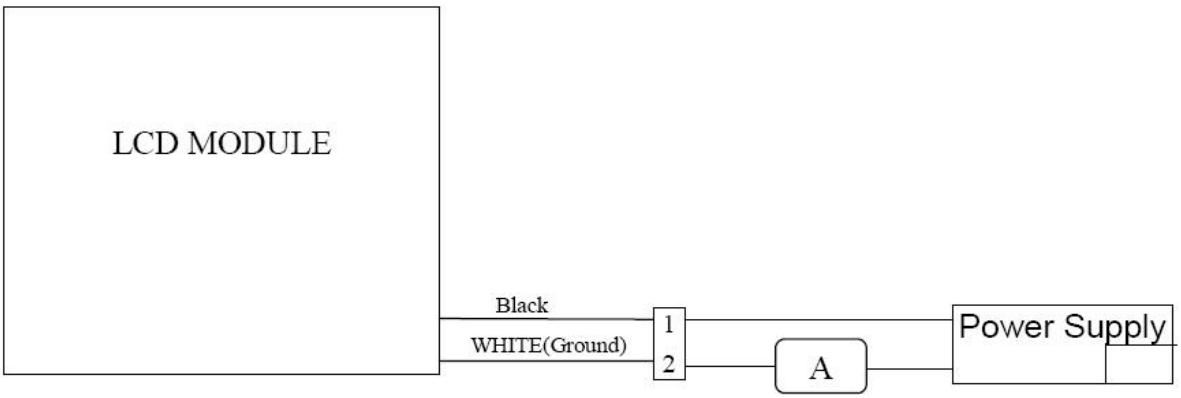

Note (1) LED life time (Hr) can be defined as the time in which it continues to operate under the condition: Ta=25±3 ° C, typical IL value indicated in the above table until the brightness becomes less than 50%.

Note (2) The "LED life time" is defined as the module brightness decrease to 50% original brightness at Ta=25℃ and IL=180mA. The LED lifetime could be decreased if operating IL is larger than 180mA. The constant current driving method is suggested.

LED CIRCUIT DIAGRAM: 3 x 8 = 27 LED

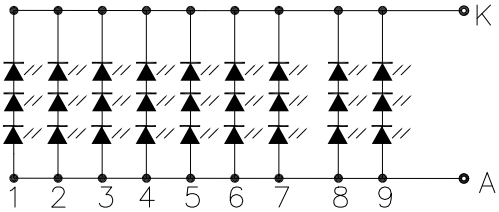

6.3 DC Characteristics

6.3.1 Absolute Maximum Rating (GND=AGND=0V)

Parameter	Symbol	Spec.			Unit
		Min.	Typ.	Max.	
Power supply voltage 1	Vdd	-0.5	-	+3.96	V
Power supply voltage 2	Avdd	-0.5	-	+13.5	V
Logic Output voltage	Vout	-0.5	-	+5.0	V
Input voltage	Vin	-0.5	-	AVDD+0.5	V
Operation temperature	T_{OPR}	-20	-	+70	℃
Storage temperature	T_{STG}	-30	-	+80	℃

Note: (1) All of the Voltages listed above are with respective to GND=0V.

(2) Device is subject to be damaged permanently if stresses belong those absolute maximum ratings listed above.

6.3.2 TTL mode DC electrical characteristics

(VDD=2.3~3.6V, AVDD=6.5~13.5V, GND=AGND=0V, TA=-25℃)

Parameter	Symbol	Spec. Min.	Typ.	Max.	Unit	Condition
Power supply voltage	VDD	2.7	3.3	3.6	V	-
Power supply voltage	VDDA	6.5	-	13.5	V	-
Low level input voltage	V_{IL}	0	-	0.3VDD	V	For digital circuit
High level input voltage	V_{IH}	0.7VDD	-	VDD	V	For digital circuit
Output low voltage	V_{OL}	-	-	VSS+0.4	V	I_{OL}=400μA
Output high voltage	V_{OH}	VDD-0.4	-	-	V	I_{OH}=-400μA
Pull low/high resistance	R_i	200	250	300	kΩ	For the digital input pin @VDD=3.3V
Input leakage current	Ii	-	-	±1	uA	For digital circuit
Digital Operation current	Idd	-	5	14	mA	Dual gate mode or Cascade mode slave, Fclk=50MHz, LD=48KHz, VDD=3.3V, CABC disable, No load
		-	7	16	mA	Cascade mode master, Fclk=50MHz, LD=48KHz,VDD=3.3V, CABC disable, No load
Digital stand-by current	Ist1	-	10	50	μA	Clock & all functions are stopped
Analog Operating current	Idda	-	6	8	mA	No load, Fclk=50MHz,FLD=48KHz @ VDDA=10V, V1=8V, V14=0.4V
Analog Stand-by current	Ist2	-	10	50	μA	No load, clock & all functions are stopped
Input level of V1~V7	Vref1	0.4VDDA	-	VDDA-1	V	Gamma correction voltage input
Input level of V8~V14	Vref2	0.1	-	0.6VDDA	V	Gamma correction voltage input
Output Voltage deviation	Vod1	-	±20	±35	mV	Vo=VSSA+0.1V~VSSA+0.5V & Vo=VDDA-0.5V~VDDA-0.1V
Output Voltage deviation	Vod2	-	±15	±20	mV	Vo=VSSA+0.5V~VDDA-0.5V
Output Voltage Offset between Chips	Voc	-	-	±20	mV	Vo=VSSA+0.5V~VDDA-0.5V
Dynamic Range of Output	Vdr	0.1	-	VDDA-0.1	V	SO1~SO1200
Sinking Current of Outputs	IOLy	80	-	-	μA	SO1~SO1200; Vo=0.1V vs. 1.0V, VDDA=13.5V
Driving Current of Outputs	IOHy	80	-	-	μA	SO1~SO1200 ;Vo=0.1V vs. 12.5V, VDDA=13.5V
Resistance of Gamma Table	Rg	0.7*Rn	1.0*Rn	1.3*Rn	Ω	Rn: Internal gamma resistor

- **TTL mode DC electrical characteristics**

6.4 AC Characteristics

6.4.1 TTL mode AC electrical characteristics

Parameter	Symbol	Spec. Min.	Typ.	Max.	Unit
HS setup time	T_{hst}	8	-	-	ns
HS hold time	T_{hhd}	8	-	-	ns
VS setup time	T_{vst}	8	-	-	ns
VS hold time	T_{vhd}	8	-	-	ns
Data setup time	T_{dsu}	8	-	-	ns
Data hold time	T_{dhd}	8	-	-	ns
DE setup time	T_{esu}	8	-	-	ns
DE hold time	T_{ehd}	8	-	-	ns
VDD Power On Slew rate	T_{POR}	-	-	20	ms
RSTB pulse width	T_{Rst}	10	-	-	us
CLKIN cycle time	T_{cph}	20	-	-	ns
CLKIN pulse duty	T_{cwh}	40	50	60	%
Output stable time	T_{sst}	-	-	6	us

- **TTL mode AC electrical characteristics**

6.4.2 TTL mode data input format

Vertical timing

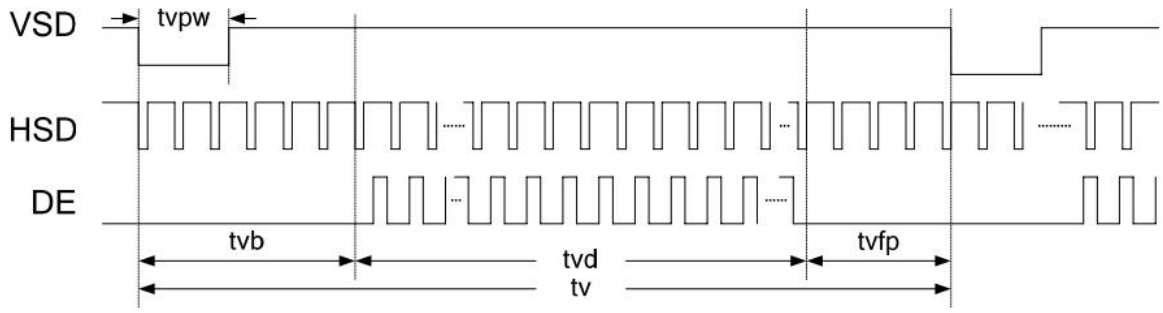

- **Vertical input timing diagram**

Horizontal timing

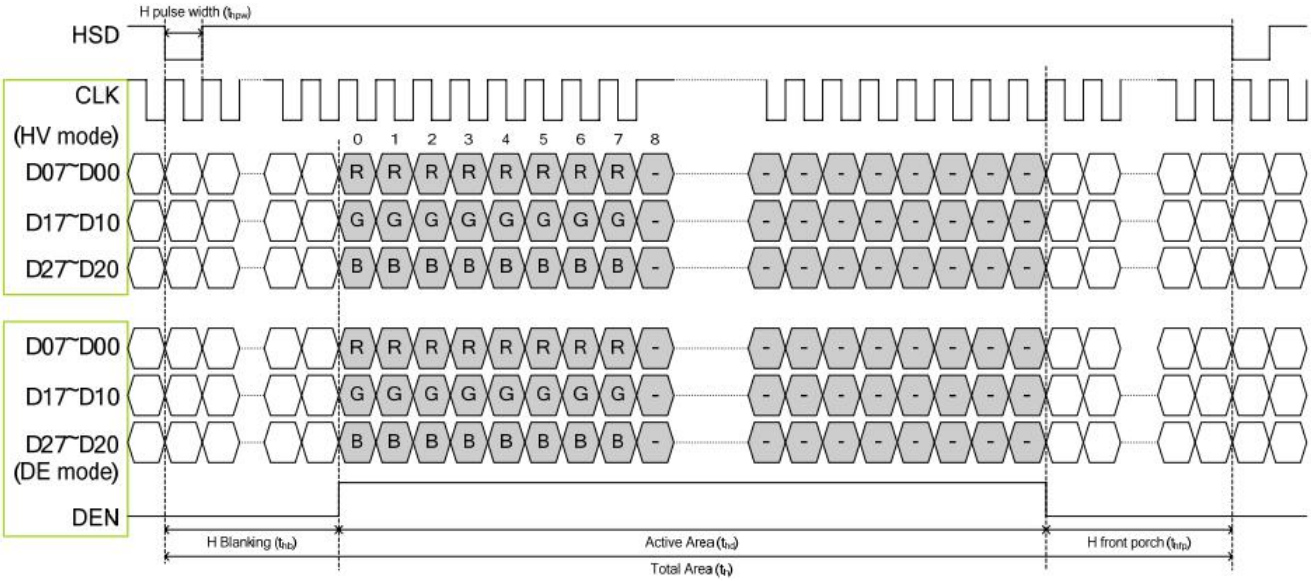

- **Horizontal input timing diagram**

6.4.3 Input timing table

HV mode
Vertical input timing

Parameter	Symbol	Value			Unit
		Min.	Typ.	Max.	
Vertical display area	tvd	600			H
VSYNC period time	tv	624	635	800	H
VSYNC pulse width	tvpw	1	—	20	H
VSYNC back porch	tvb	23	23	23	H
VSYNC front porch	tvfp	1	12	177	H

HV mode
Horizontal input timing

Parameter		Symbol	Value			Unit
Horizontal display area		thd	1024			DCLK
DCLK frequency@ Frame rate=60hz		fclk	Min.	Typ.	Max.	
			44.9	51.2	70.3	Mhz
1 Horizontal Line		th	1200	1344	1464	DCLK
HSYNC pulse width	Min.	thpw	1			
	Typ.		—			
	Max.		140			
HSYNC blanking		thb	160	160	160	
HSYNC front porch		thfp	16	160	216	

6.5 Timing Diagram of Interface Signal

6.5.1 Input clock and data timing waveform

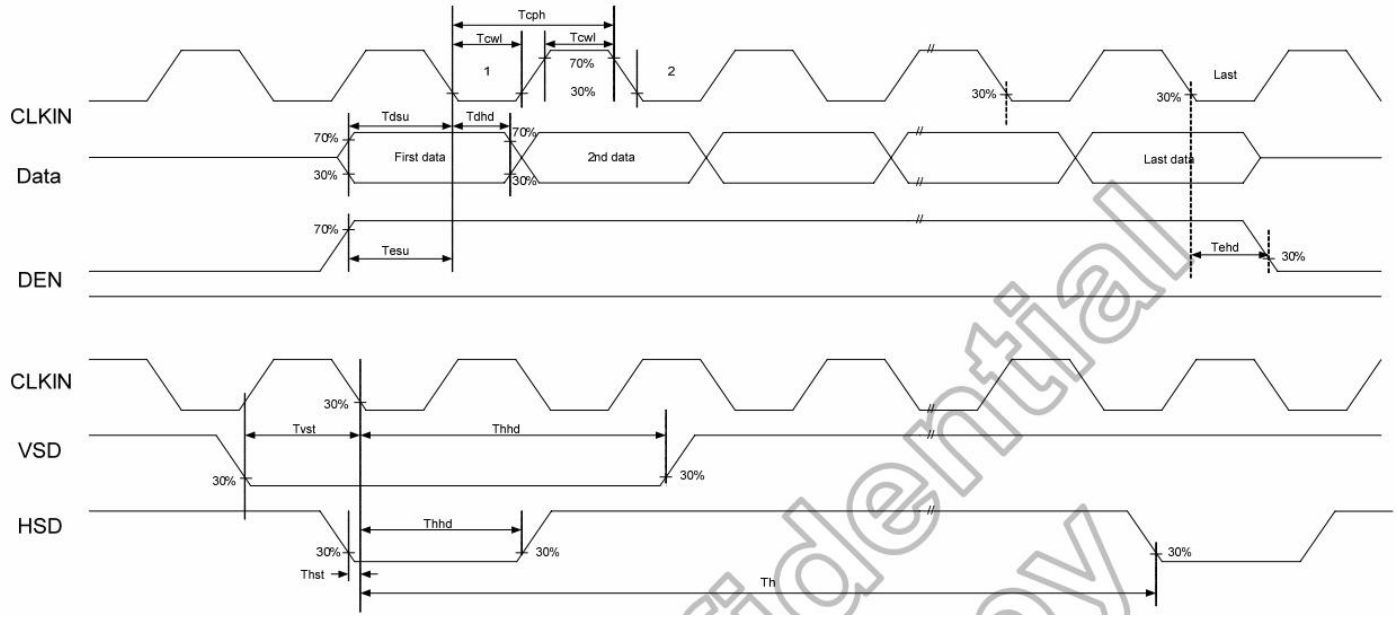

Input clock and data timing diagram

6.5.2 Source output timing diagram (cascade)

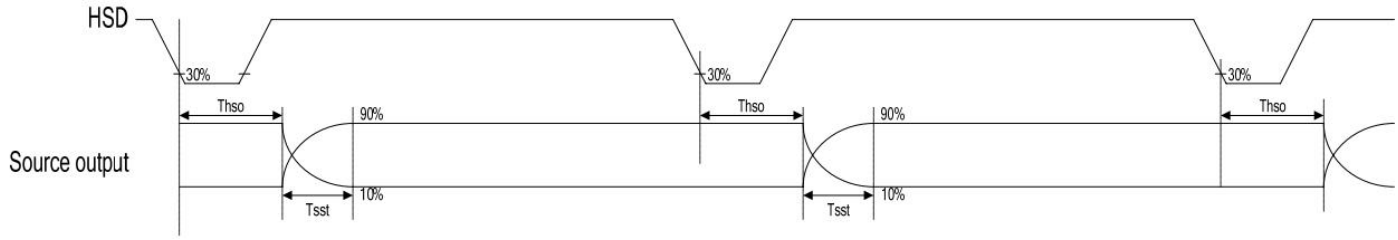

Source output timing diagram

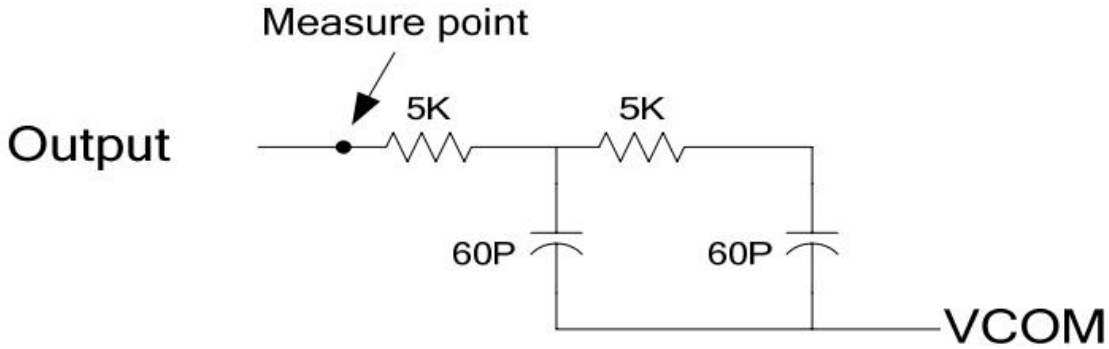

Output load condition

7.0 Reliability test items

Test Item	Test Conditions	Notes
High temperature Operation	Ta= +60℃, 120hrs	
Low temperature Operation	Ta= -20℃, 120hrs	
High Temperature Storage	Ta= +70℃, 120hrs	
Low Temperature Storage	Ta= -30℃, 120hrs	
Humidity Test	60℃ ,Humidity 90% ,96hrs	
Thermal Shock Test	-20℃,30min～+60℃,30min (30 cycle)	
Vibration Test(Packing)	Sine Wave 1.04G, 5~500Hz, XYZ 30min/each direction	
Static Electricity	Half-Sine, 100G, 6ms, ±XYZ, 3 cycle	

8.0 OUTLINE DIMENSION

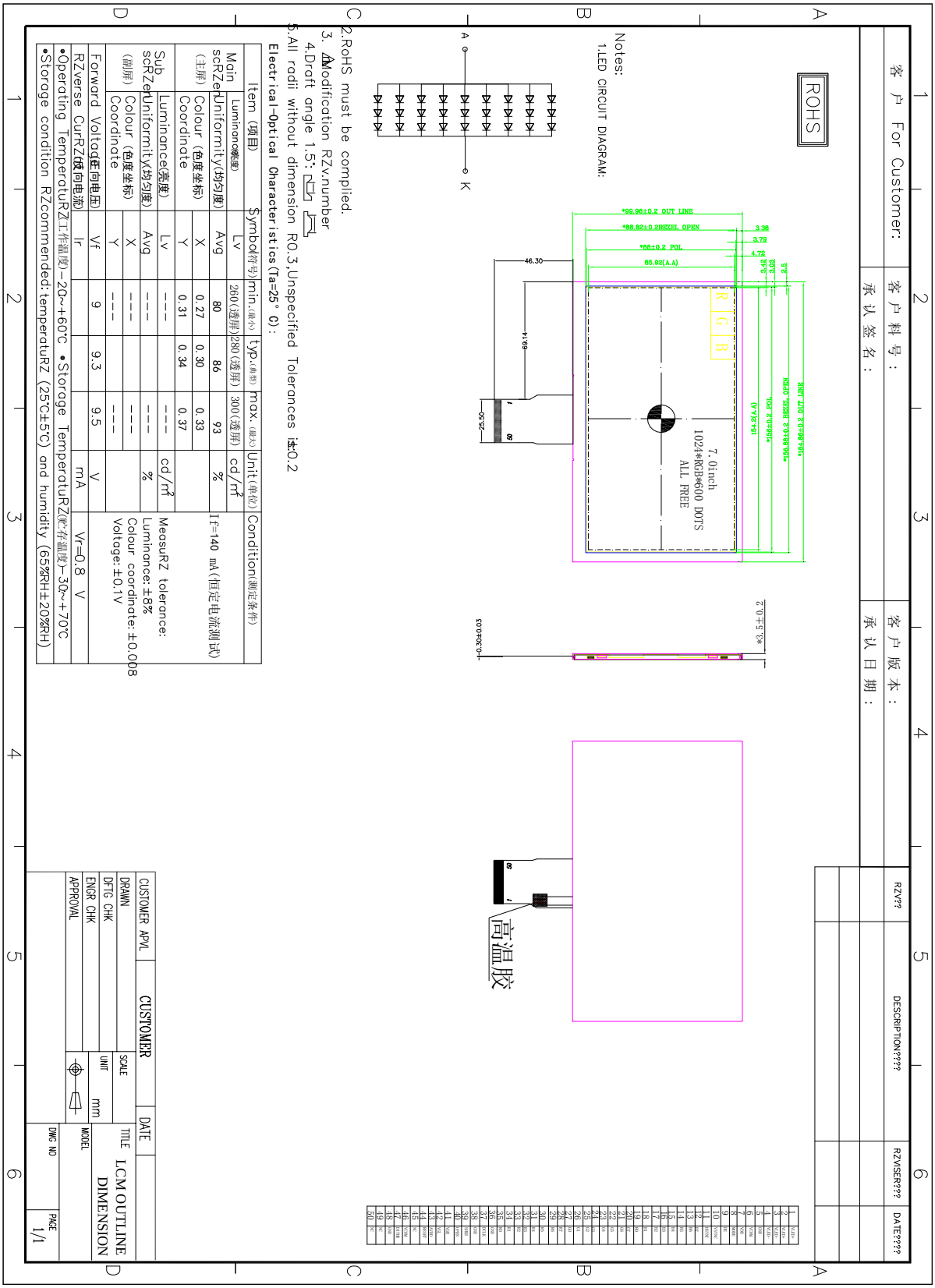

9.0 General precaution

9.1 Use Restriction

This product is not authorized for use in life supporting systems, aircraft navigation control systems, military systems and any other application where performance failure could be life threatening or otherwise catastrophic.

9.2 Disassembling or Modification

Do not disassemble or modify the module. It may damage sensitive parts inside LCD module, and may cause scratches or dust on the display. Factory does not warrant the module, if customers disassemble or modifythe module.

9.3 Breakage of LCD Panel

8.3.1.If LCD panel is broken and liquid crystal spills out, do not ingest or inhale liquid crystal, and do not contact liquid crystal with skin.

8.3.2. If liquid crystal contacts mouth or eyes, rinse out with water immediately.

8.3.3. If liquid crystal contacts skin or cloths, wash it off immediately with alcohol and rinse thoroughly with water.

8.3.4. Handle carefully with chips of glass that may cause injury, when the glass is broken.

9.4 Electric Shock

8.4.1. Disconnect power supply before handling LCD module.

8.4.2. Do not pull or fold the LED cable.

8.4.3. Do not touch the parts inside LCD modules and the fluorescent LED's connector or cables in order to prevent electric shock.

9.5 Absolute Maximum Ratings and Power Protection Circuit

8.5.1. Do not exceed the absolute maximum rating values, such as the supply voltage variation, input voltage variation, variation in parts' parameters, environmental temperature, etc., otherwise LCD module may be damaged.

8.5.2. Please do not leave LCD module in the environment of high humidity and high temperature for a long time.

8.5.3. It's recommended to employ protection circuit for power supply.

9.6 Operation

8.6.1 Do not touch, push or rub the polarizer with anything harder than HB pencil lead.

8.6.2 Use fingerstalls of soft gloves in order to keep clean display quality, when persons handle the LCD module for incoming inspection or assembly.

8.6.3 When the surface is dusty, please wipe gently with absorbent cotton or other soft material.

8.6.4 Wipe off saliva or water drops as soon as possible. If saliva or water drops contact with polarizer for a long time, they may causes deformation or color fading.

8.6.5 When cleaning the adhesives, please use absorbent cotton wetted with a little petroleum benzine or other adequate solvent.

9.7 Mechanism

Please mount LCD module by using mouting holes arranged in four corners tightly.

9.8 Static Electricity

8.8.1 Protection film must remove very slowly from the surface of LCD module to prevent from electrostatic occurrence.

8.8.2. Because LCD module use CMOS-IC on circuit board and TFT-LCD panel, it is very weak to electrostatic discharge. Please be careful with electrostatic discharge. Persons who handle the module should be grounded through adequate methods.

9.9 Strong Light Exposure

The module shall not be exposed under strong light such as direct sunlight. Otherwise, display characteristics may be changed.