MODEL No:BI0700RGB-T

Record of Revision

Date	Revision No.	Summary
2014-11-12	1.0	Rev 1.0 was issued
2016-03-03	1.1	Correct the temperature of reliability tests Correct the maximum value of tvfp

1. Scope
   This data sheet is to introduce the specification of BI0700RGB-T, active matrix TFT module. It is composed of a color TFT-LCD panel, driver ICs, FPC and a backlight unit. The 7.0″ display area contains 800X3 (RGB) x 480 pixels.

2. Application
   Digital equipments which need color display, mobile navigator/video systems.

3. General Information

Feature		Spec
Display Spec.	Size	7.0 inch
	Resolution	800(RGB) x 480
	Interface	RGB 24 bits with TCON
	Color Depth	16M
	Technology Type	a-Si TFT
	Pixel Pitch (mm)	0.1926 (H) x 0.179(V)
	Pixel Configuration	R.G.B. Vertical Stripe
	Display Mode	TM,NW
	Surface Treatment	Anti Glare
	Viewing Direction	6 o'clock
Mechanical Characteristics	LCM (W x H x D) (mm)	164.9x 100 x 6.6
	Active Area(mm)	154.08 (W) x 85.92 (H)
	With /Without TSP	With TSP
	Weight (g)	TBD
	LED Numbers	24 LEDS

Note 1: Requirements on Environmental Protection: RoHS
Note 2: LCM weight tolerance: +/- 5%

4. Outline Drawing

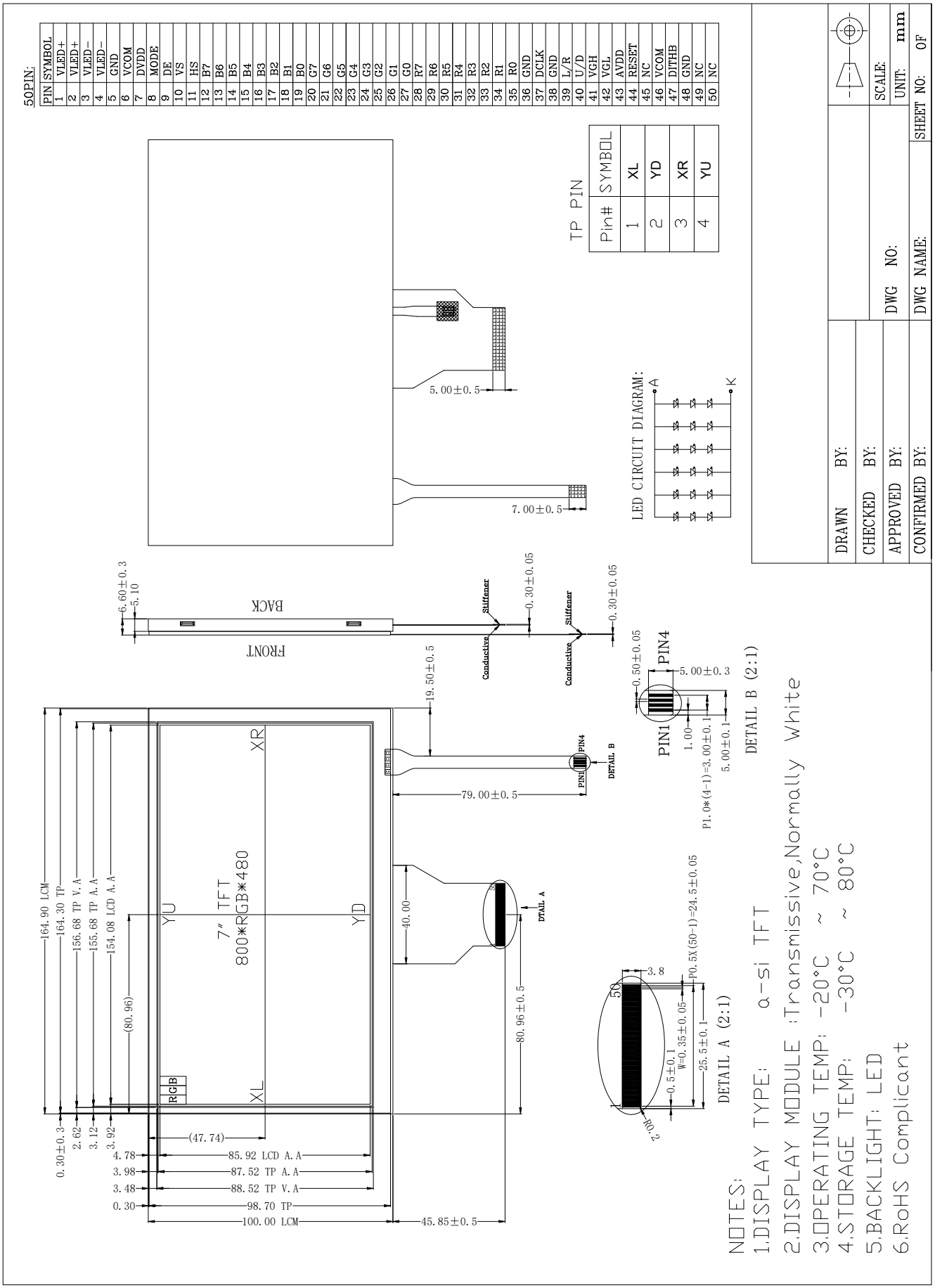

5. Interface signals

No	Symbol	Description	Remark
1	VLED+	Power for LED backlight (Anode)	
2	VLED+	Power for LED backlight (Anode)	
3	VLED-	Power for LED backlight (Cathode)	
4	VLED-	Power for LED backlight (Cathode)	
5	GND	Power ground	
6	VCOM	Common voltage	
7	DVDD	Power for Digital Circuit	
8	MODE	DE/SYNC mode select	
9	DE	Data Input Enable	
10	VS	Vertical Sync Input	
11	HS	Horizontal Sync Input	
12	B7	Blue data(MSB)	
13	B6	Blue data	
14	B5	Blue data	
15	B4	Blue data	
16	B3	Blue data	
17	B2	Blue data	
18	B1	Blue data	
19	B0	Blue data(LSB)	
20	G7	Green data(MSB)	
21	G6	Green data	
22	G5	Green data	
23	G4	Green data	
24	G3	Green data	
25	G2	Green data	
26	G1	Green data	
27	G0	Green data(LSB)	
28	R7	Red data(MSB)	
29	R6	Red data	
30	R5	Red data	
31	R4	Red data	
32	R3	Red data	
33	R2	Red data	
34	R1	Red data	
35	R0	Red data(LSB)	
36	GND	Power Ground	
37	DCLK	Sample clock	
38	GND	Power Ground	
39	L/R	Left / right selection Note 4,5	
40	U/D	Up/down selection Note 4,5	
41	VGH	Gate ON Voltage	

42	VGL	Gate OFF Voltage	
43	AVDD	Power for Analog Circuit	
44	RESET	Global reset pin.	
45	NC	No connection	
46	VCOM	Common Voltage	
47	DITHB	Dithering function	
48	GND	Power Ground	
49	NC	No connection	
50	NC	No connection	

Note 1: DE/SYNC mode select. Normally pull high.
When select DE mode, MODE=”1”, VS and HS must pull high.
When select SYNC mode, MODE= ”0”, DE must be grounded.
Note 2: When input 18 bits RGB data, the two low bits of R,G and B data must be grounded.
Note 3: Data shall be latched at the falling edge of DCLK.
Note 4: Selection of scanning mode

Setting of scan control input		Scanning direction
U/D	L/R	
GND	DV_{DD}	Up to down, left to right
DV_{DD}	GND	Down to up, right to left
GND	GND	Up to down, right to left
DV_{DD}	DV_{DD}	Down to up, left to right

Note 5: Definition of scanning direction.
Refer to the figure as below:

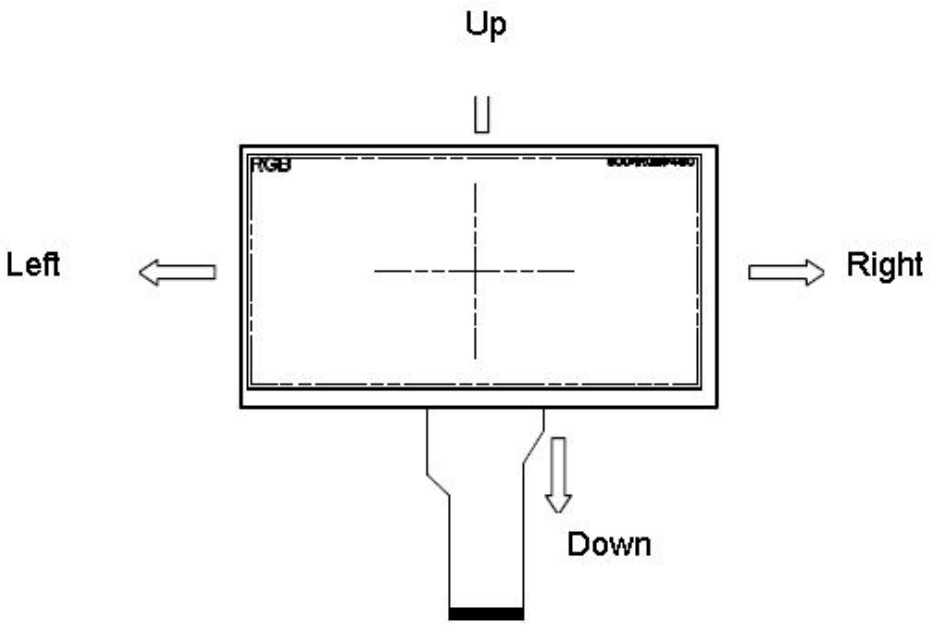

Note 6: Global reset pin. Active low to enter reset state. Suggest to connect with an RC reset circuit for stability. Normally pull high.
Note 7: Dithering function enable control, normally pull high.
When DITHB=”1”,Disable internal dithering function,
When DITHB=”0”,Enable internal dithering function,

6. Absolute maximum Ratings

6.1. Electrical Absolute max. ratings

Parameter	Symbol	MIN	MAX	Unit	Remark
Power voltage	DVDD	-0.3	5.0	V	
	AVDD	6.5	13.5	V	
	VGH	-0.3	40.0	V	
	VGL	-20.0	0.3	V	
	VGH-VGL	--	40.0	V	

6.2. Environment Conditions

Item	Symbol	MIN	MAX	Unit	Remark
Operating Temperature	TOPR	-20	70	℃	
Storage Temperature	TSTG	-30	80	℃	

7. Electrical Specifications

7.1 Electrical characteristics

GND=0V, Ta=25℃

Item	Symbol	MIN	TYP	MAX	Unit	Remark
Input signal voltage	VCOM	3.6	3.8	4.0	V	
Input logic high voltage	VIH	0.7 DVDD	-	DVDD	V	NOTE3
Input logic low voltage	VIL	0	-	0.3 DVDD	V	NOTE3
Power voltage	DVDD	3	3.3	3.6	V	NOTE2
	AVDD	10.2	10.4	10.6	V	
	VGH	15.3	16.0	16.7	V	
	VGL	-7.7	-7	-6.3	V	

Note 1: Be sure to apply DVDD and VGL to the LCD first, and then apply VGH.
Note 2: DVDD setting should match the signals output voltage (refer to Note 3) of customer's system board.
Note 3: DCLK,HS,VS,RESET,U/D, L/R,DE,R0~R7,G0~G7,B0~B7,MODE,DITHB.

7.2 Current Consumption

Item	Symbol	MIN	TYP	MAX	Unit	Remark
Current for Driver	IGH	--	0.2	1.0	mA	VGH =16.0V
	IGL	--	0.2	1.0	mA	VGL = -7.0V
	IDVDD	--	4.0	10	mA	DVDD =3.3V
	IAVDD	--	20	50	mA	AVDD =10.4V

7.3 LED Backlight

Ta=25℃

Item	Symbol	MIN	TYP	MAX	Unit	Remark
Forward Current	IL	-	120		mA	
Forward Voltage	VL	-	9.3	-	V	Note1

Note 1: The LED Supply Voltage is defined by the number of LED at Ta=25℃ and IL =120mA.

8. Command/AC Timing

8.1 AC Electrical Characteristics

Item	Symbol	Rating			Unit	Remark
		MIN	TYP	MAX		
HS setup time	Thst	8	-	-	ns	
HS hold time	Thhd	8	-	-	ns	
VS setup time	Tvst	8	-	-	ns	
VS hold time	Tvhd	8	-	-	ns	
Data setup time	Tdsu	8	-	-	ns	
Data hole time	Tdhd	8	-	-	ns	
DE setup time	Tesu	8	-	-	ns	
DE hole time	Tehd	8	-	-	ns	
DVDD Power On Slew rate	TPOR	-	-	20	ms	From 0 to 90% DVDD
RESET pulse width	TRst	1	-	-	ms	
DCLK cycle time	Tcoh	20	-	-	ns	
DCLK pulse duty	Tcwh	40	50	60	%	

8.2 Input Clock and Data Timing Diagram

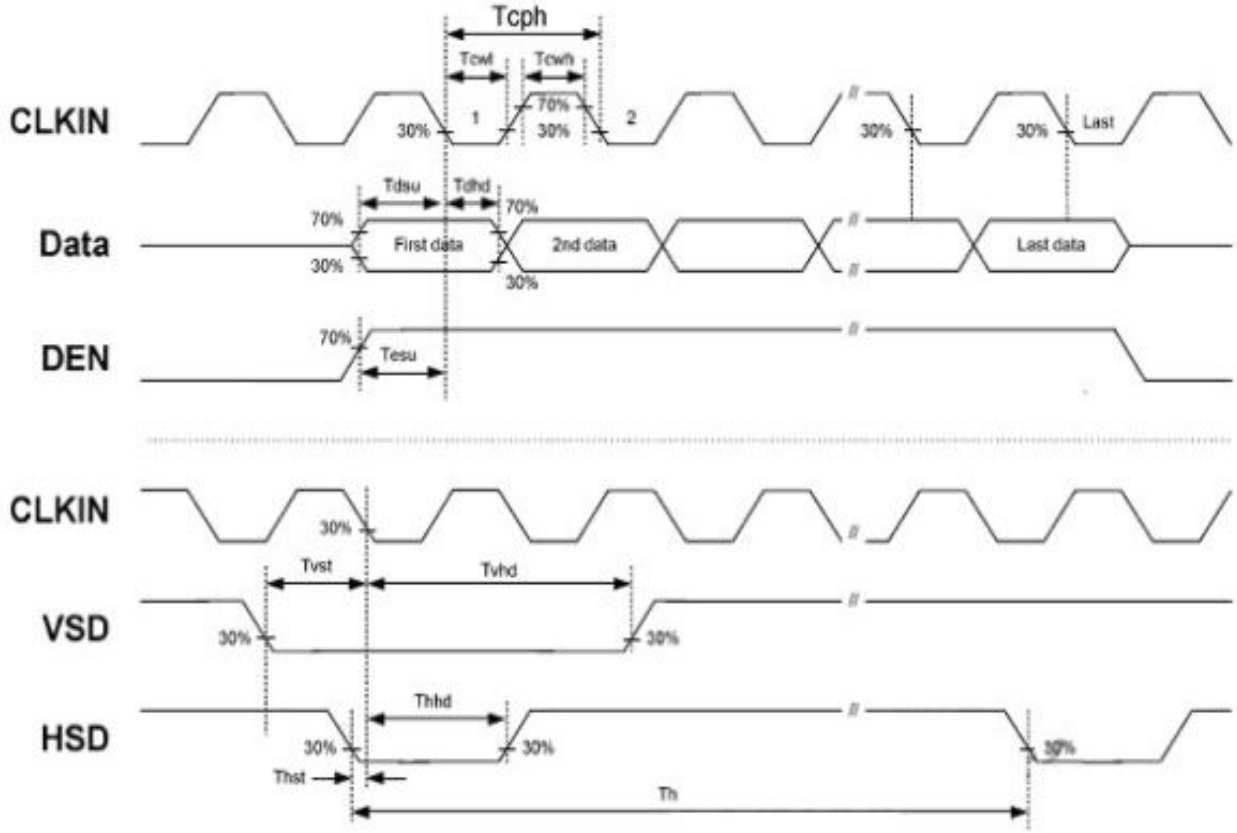

8.3 Timing

Item	Symbol	Rating			Unit	Remark
		MIN	TYP	MAX		
Horizontal Display Area	Thd	--	800	--	DCLK	
DCLK Frequency	Fclk	26.4	33.3	46.8	MHZ	
One Horizontal Line	Th	862	1056	1200	DCLK	
HS pulse width	Thpw	1	--	40	DCLK	
HS Blanking	thb	46	46	46	DCLK	
HS Front Porch	thfp	16	210	354	DCLK	

Item	Symbol	Rating			Unit	Remark
		MIN	TYP	MAX		
Vertical Display Area	Tvd	--	480	--	TH	
VS period time	Tv	510	525	650	TH	
VS pulse width	Tvpw	1	--	20	TH	
VS Blanking	tvb	23	23	23	TH	
VS Front Porch	tvfp	7	22	147	TH	

8.4 Data Input Format

8.4.1. horizontal input timing diagram

8.4.2. Vertical input timing diagram

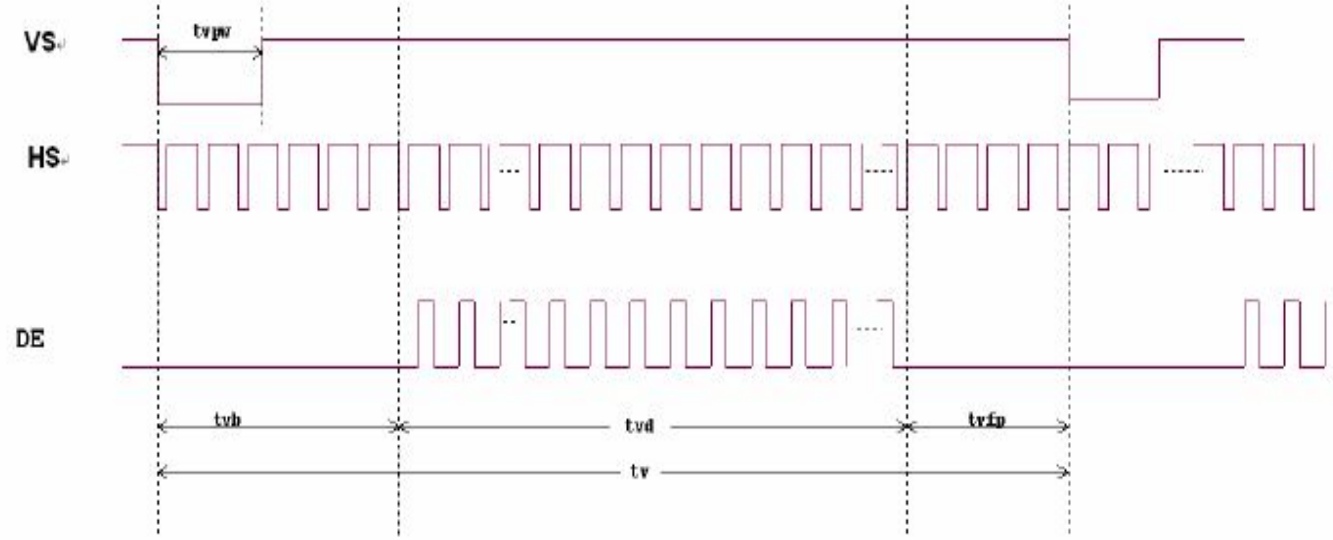

8.5 Power ON/Off Sequence

a. Power on

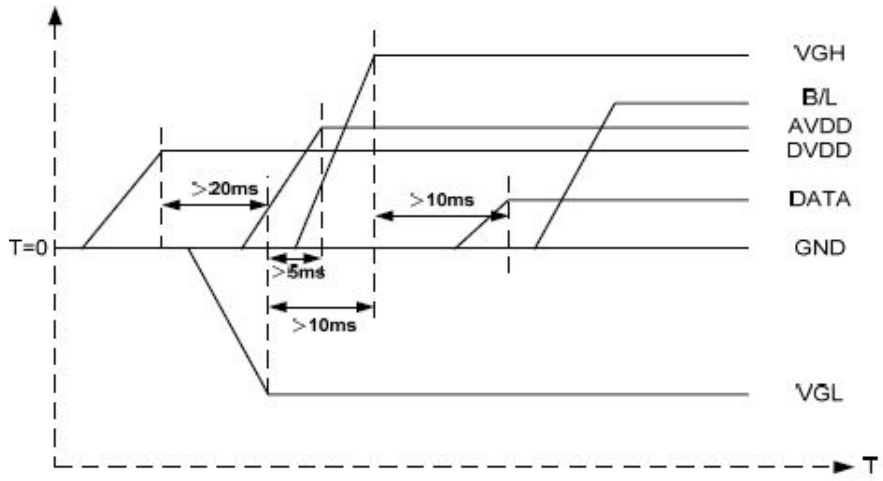

$DV_{DD} \rightarrow VGL \rightarrow VGH \rightarrow Data \rightarrow B/L$

b. Power off

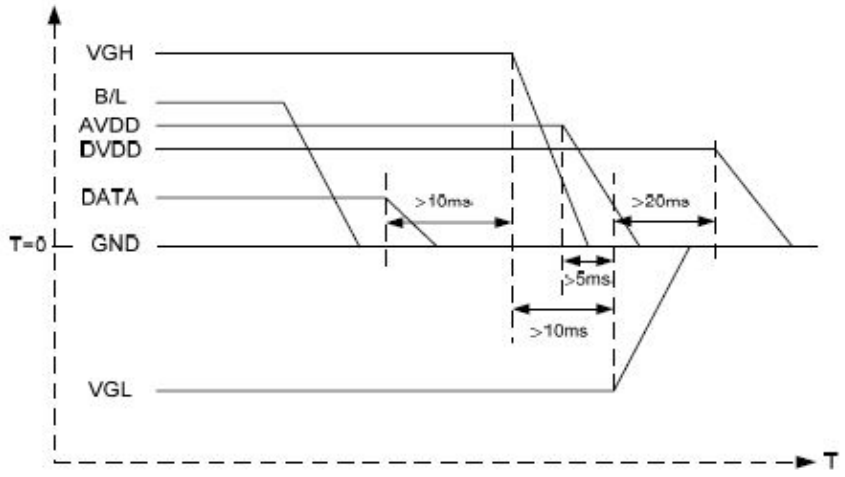

$B/L \rightarrow Data \rightarrow VGH \rightarrow VGL \rightarrow DV_{DD}$

Note: Data include R0~R7, B0~B7, G0~G7, U/D, L/R, DCLK, HS,VS,DE.

9. Optical Specification

Ta=25℃

Item		Symbol	Condition	Min	Typ.	Max.	Unit	Remark
Contrast Ratio		CR	θ=0°	400	500	-		Note1 Note2
Response Time		Ton	25℃	-	10	20	ms	Note1 Note3
		Toff		-	15	30		
View Angles		ΘT	CR≧10	40	50	-	Degree	Note 4
		ΘB		60	70	-		
		ΘL		60	70	-		
		θR		60	70	-		
Chromaticity	White	x	Brightness is on	0.30	0.32	0.34		Note5, Note1
		y		0.32	0.34	0.36		
Luminance		L		-	220	-	cd/m^2	Note1 Note6
Uniformity		U		75		-	%	Note1 Note7

Test condition: DVDD=3.3V, the ambient temperature is 25℃.

Note 1: Definition of optical measurement system.

Temperature = 25℃(±3℃)

LED back-light: ON, Environment brightness < 150 lx

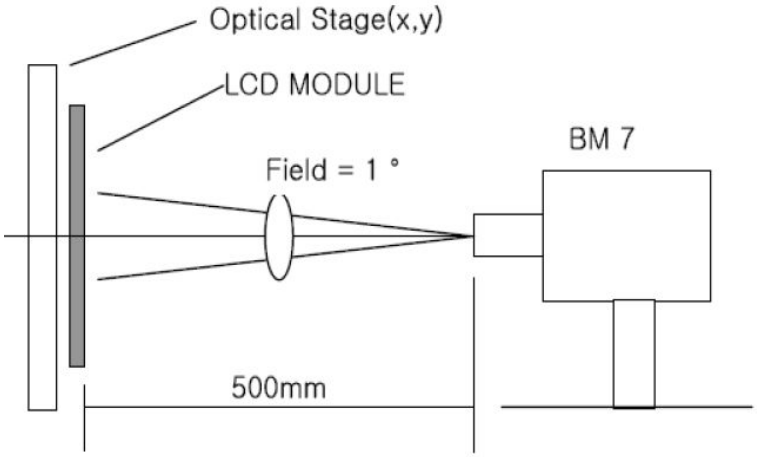

Note 2: Contrast ratio is defined as follow:

$$\text{Contrast Ratio} = \frac{\text{Surface Luminance with all white pixels}}{\text{Surface Luminance with all black pixels}}$$

Note 3: Response time is defined as follow:

Response time is the time required for the display to transition from black to white (Rise Time, Tr) and from white to black(Decay Time, Tf).

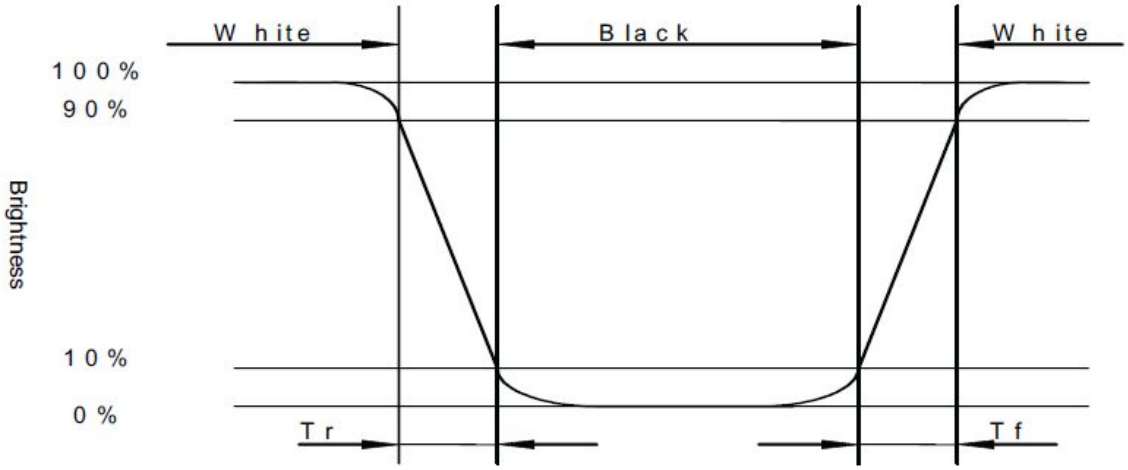

Note 4: Viewing angle range is defined as follow:

Viewing angle is measured at the center point of the LCD.

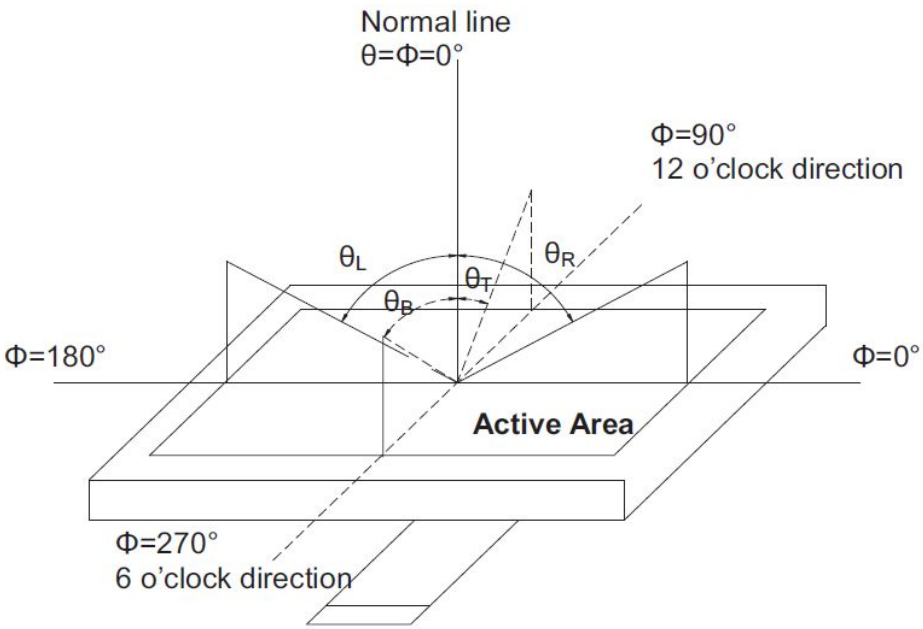

Note 5: Color chromaticity is defined as follow: (CIE1931)

Color coordinates measured at center point of LCD.

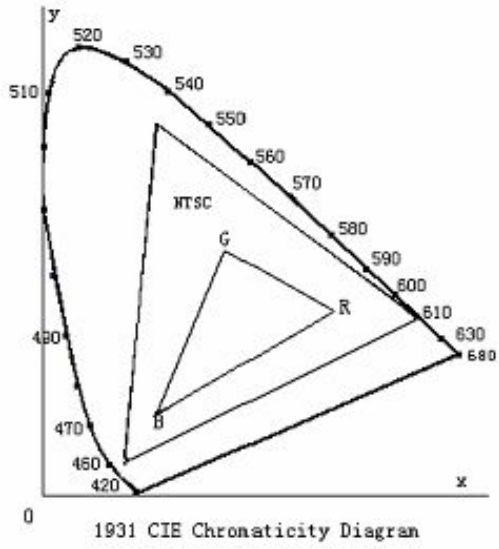

$$S = \frac{\text{area of RGB triangle}}{\text{area of NTSC triangle}} \times 100\%$$

Note 6: Luminance is defined as follow:

Luminance is defined as the brightness of all pixels "White" at the center of display area on optimum contrast.

Note 7: Luminance Uniformity is defined as follow:

Active area is divided into 9 measuring areas (Refer Fig. 2). Every measuring point is placed at the center of each measuring area.

$$\text{Uniformity (U)} = \frac{\text{Minimum Luminance(brightness) in 9 points}}{\text{Maximum Luminance(brightness) in 9 points}}$$

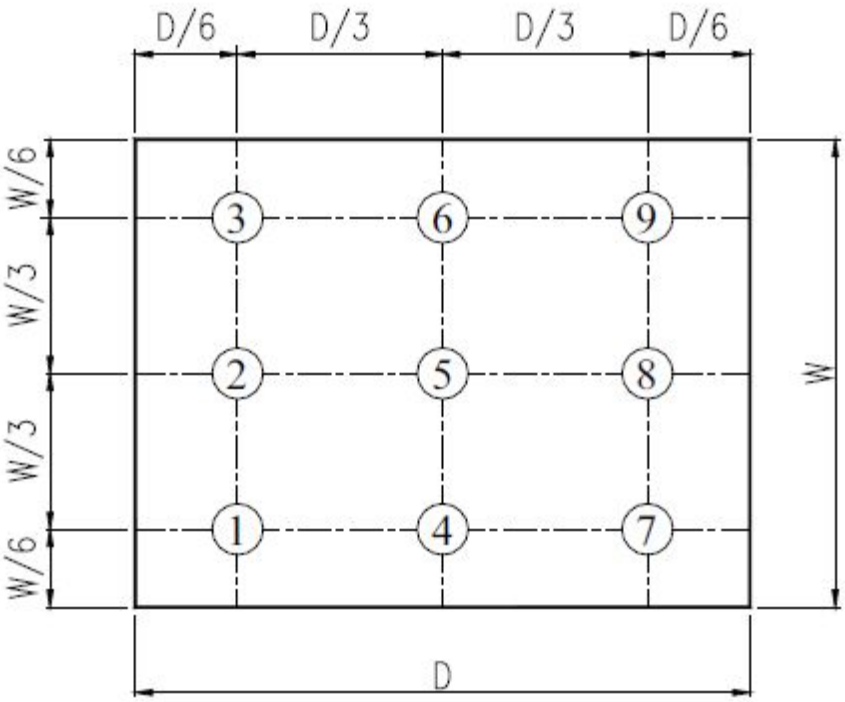

Fig. 2 Definition of uniformity

10. Environmental / Reliability Tests

No	Test Item	Condition	Judgment criteria
1	High Temp Operation	Ts=+70℃, 120hrs	Per table in below
2	Low Temp Operation	Ta=-20℃, 120hrs	Per table in below
3	High Temp Storage	Ta=+80℃, 120hrs	Per table in below
4	Low Temp Storage	Ta=-30℃, 120hrs	Per table in below
5	High Temp & High Humidity Storage	Ta=+60℃, 90% RH 120 hours	Per table in below (polarizer discoloration is excluded)
6	Thermal Shock (Non-operation)	-30℃ 30 min~+80℃ 30 min, Change time:5min, 10 Cycles	Per table in below
7	ESD (Operation)	C=150pF, R=330Ω，5points/panel Air:±8KV, 5times; Contact:±4KV, 5 times;	Per table in below
8	Vibration (Non-operation)	Frequency range:10~55Hz, Stroke:1.5mm Sweep:10Hz~55Hz~10Hz 2 hours for each direction of X.Y.Z.	Per table in below
9	Shock (Non-operation)	60G 6ms, ±X,±Y,±Z 3times, for each direction	Per table in below
10	Package Drop Test	Height:80 cm, 1 corner, 3 edges, 6 surfaces	Per table in below

INSPECTION	CRITERION(after test)
Appearance	No Crack on the FPC, on the LCD Panel
Alignment of LCD Panel	No Bubbles in the LCD Panel No other Defects of Alignment in Active area
Electrical current	Within device specifications
Function / Display	No Broken Circuit, No Short Circuit or No Black line No Other Defects of Display

11. Precautions for Use of LCD Modules

11.1 Safety

The liquid crystal in the LCD is poisonous. Do not put it in your mouth. If the liquid crystal touches your skin or clothes, wash it off immediately using soap and water.

11.2 Handling

A. The LCD and touch panel is made of plate glass. Do not subject the panel to mechanical shock or to excessive force on its surface.
B. Do not handle the product by holding the flexible pattern portion in order to assure the reliability
C. Transparency is an important factor for the touch panel. Please wear clear finger sacks, gloves and mask to protect the touch panel from finger print or stain and also hold the portion outside the view area when handling the touch panel.
D. Provide a space so that the panel does not come into contact with other components.
E. To protect the product from external force, put a covering lens (acrylic board or similar board) and keep an appropriate gap between them.
F. Transparent electrodes may be disconnected if the panel is used under environmental conditions where dew condensation occurs.
G. Property of semiconductor devices may be affected when they are exposed to light, possibly resulting in IC malfunctions.
H. To prevent such IC malfunctions, your design and mounting layout shall be done in the way that the IC is not exposed to light in actual use.

11.3 Static Electricity

A. Ground soldering iron tips, tools and testers when they are in operation.
B. Ground your body when handling the products.
C. Power on the LCD module before applying the voltage to the input terminals.
D. Do not apply voltage which exceeds the absolute maximum rating.
E. Store the products in an anti-electrostatic bag or container.

11.4Storage

A. Store the products in a dark place at +25℃±10℃ with low humidity (40% RH to 60% RH). Don't expose to sunlight or fluorescent light.
B. Storage in a clean environment, free from dust, active gas, and solvent.

11.5 Cleaning

A. Do not wipe the touch panel with dry cloth, as it may cause scratch.
B. Wipe off the stain on the product by using soft cloth moistened with ethanol. Do not allow ethanol to get in between the upper film and the bottom glass. It may cause peeling issue or defective operation. Do not use any organic solvent or detergent other than ethanol.

11.6 Cautions for installing and assembling

Bezel edge must be positioned in the area between the Active area and View area. The bezel may press the touch screen and cause activation if the edge touches the active area. A gap of approximately 0.5mm is needed between the bezel and the top electrode. It may cause unexpected activation if the gap is too narrow. There is a tolerance of 0.2 to 0.3mm for the outside dimensions of the touch panel and tail. A gap must be made to absorb the tolerance in the case and connector.