Product Specification

Part Name: 7.0 inch TFT Module

Customer Part ID: BI070SVGA

Customer:
Approved by

Revision History

Rev.	Date	Contents	Written	Approved
A	2012/05/07	Preliminary Specification		

Special Notes

Note1.	

Contents

1. General Specifications

No.	Item	Specification	Remark
1	LCD size	7.0 inch(Diagonal)	
2	Driver element	a-Si TFT active matrix	
3	Resolution	800 × 3(RGB) × 600	
4	Display mode	Normally White, Transmissive	
5	Dot pitch	0.059(W) × 0.177(H) mm	
6	Active area	141.6(H) × 106.2(V) mm	
7	Module size	154(W) ×119.2(H)×3.5(D)	Note 1
8	Surface treatment	Anti-Glare	
9	Color arrangement	RGB-stripe	
10	Interface	Digital 24bit RGB	
11	Panel power consumption	0.50W (Typ.)	
12	Weight	TBD (Typ.)	
13	View direction(Gray inversion)	6 o'clock	

Note 1: Refer to Mechanical Drawing.

2. Pin Assignment

FPC Connector is used for the module electronics interface. The recommended model is 3414DS_KOTL_F12260-H12100 manufactured by KOTL

Pin No.	Symbol	I/O	Function	Remark
1	LED+	P	LED Anode	
2	LED+	P	LED Anode	
3	NC	P	NO Connect	
4	LED-	P	LED Cathode	
5	LED-	P	LED Cathode	
6	GND	P	Ground	
7	VCOM	P	Common voltage	
8	AVDD	P	Power Voltage for Analog circuit	
9	V10	P	Adjusting Gamma Correction	
10	V9	P	Adjusting Gamma Correction	
11	V8	P	Adjusting Gamma Correction	
12	V7	P	Adjusting Gamma Correction	
13	V6	P	Adjusting Gamma Correction	
14	V5	P	Adjusting Gamma Correction	
15	V4	P	Adjusting Gamma Correction	
16	V3	P	Adjusting Gamma Correction	
17	V2	P	Adjusting Gamma Correction	
18	V1	P	Adjusting Gamma Correction	
19	VCOM	P	Common voltage	
20	AVDD	P	Power Voltage for Analog circuit	
21	VCC	P	Power Voltage for Digital circuit	
22	RSTB	I	Global reset pin.	
23	STBY	I	Standby mode	
24	UPDN	I	Up/down selection	
25	SHLR	I	Left/Right selection	
26	MODE	I	DE/SYNC mode select	
27	GND	P	Ground	
28	R0	I	Red data	
29	R1	I	Red data	
30	R2	I	Red data	
31	R3	I	Red data	
32	R4	I	Red data	
33	R5	I	Red data	

34	R6	I	Red data	
35	R7	I	Red data	
36	G0	I	Green data	
37	G1	I	Green data	
38	G2	I	Green data	
39	G3	I	Green data	
40	G4	I	Green data	
41	G5	I	Green data	
42	G6	I	Green data	
43	G7	I	Green data	
44	B0	I	Blue data	
45	B1	I	Blue data	
46	B2	I	Blue data	
47	B3	I	Blue data	
48	B4	I	Blue data	
49	B5	I	Blue data	
50	B6	I	Blue data	
51	B7	I	Blue data	
52	GND	P	Ground	
53	DCLK	I	Sample clock	
54	GND	P	Ground	
55	DE	I	Data Input Enable	
56	HSD	I	Horizontal Sync Input	
57	VSD	I	Vertical Sync Input	
58	VCC	P	Power Voltage for Digital circuit	
59	VGH	P	Gate ON Voltage	
60	VGL	P	Gate OFFvoltage	

I: input, O: output, P: Power

Note: Definition of scanning direction.
Refer to the figure as below:

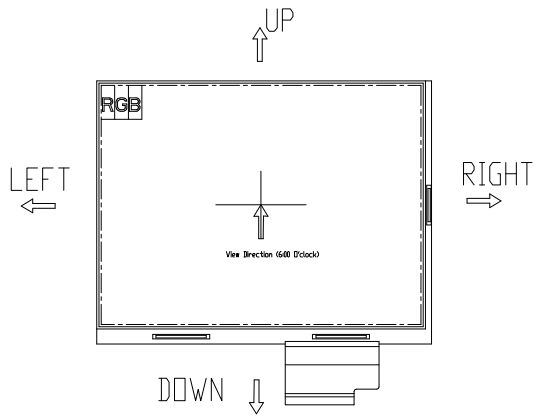

3. Operation Specifications

3.1. Absolute Maximum Ratings

(Note 1)

Item	Symbol	Values		Unit	Remark
		Min.	Max.		
Power voltage	DV_{DD}	-0.5	5.0	V	
	AV_{DD}	6.5	13.5	V	
	V_{GH}	-0.3	20.0	V	
	V_{GL}	-20.0	0.3	V	
	V_{GH}-V_{GL}	-	40.0	V	
Operation Temperature	T_{OP}	-20	70	℃	
Storage Temperature	T_{ST}	-30	80	℃	

Note 1: The absolute maximum rating values of this product are not allowed to be exceeded at any times. Should a module be used with any of the absolute maximum ratings exceeded, the characteristics of the module may not be recovered, or in an extreme case, the module may be permanently destroyed.

Note 2: Pulse Width≦10msec and Duty≦1/10.

3.1.1. Typical Operation Conditions

(Note 1)

Item	Symbol	Values			Unit	Remark
		Min.	Typ.	Max.		
Power voltage	DV_{DD}	3.0	3.3	3.6	V	Note 2
	AV_{DD}	11.8	12	12.2	V	
	V_{GH}	13	16	17	V	
	V_{GL}	-8	-7	-6	V	
Input signal voltage	V_{COM}	3.6	(4.6)	5.6	V	Note3
Input logic high voltage	V_{IH}	0.7 DV_{DD}	-	DV_{DD}	V	
Input logic low voltage	V_{IL}	0	-	0.3 DV_{DD}	V	

Note 1: Be sure to apply DV_{DD} and V_{GL} to the LCD first, and then apply V_{GH}.
Note 2: DV_{DD} setting should match the signals output voltage (refer to Note 3) of customer's system board.
Note 3: Typical V_{COM} is only a reference value, it must be optimized according to each LCM. Be sure to use VR.

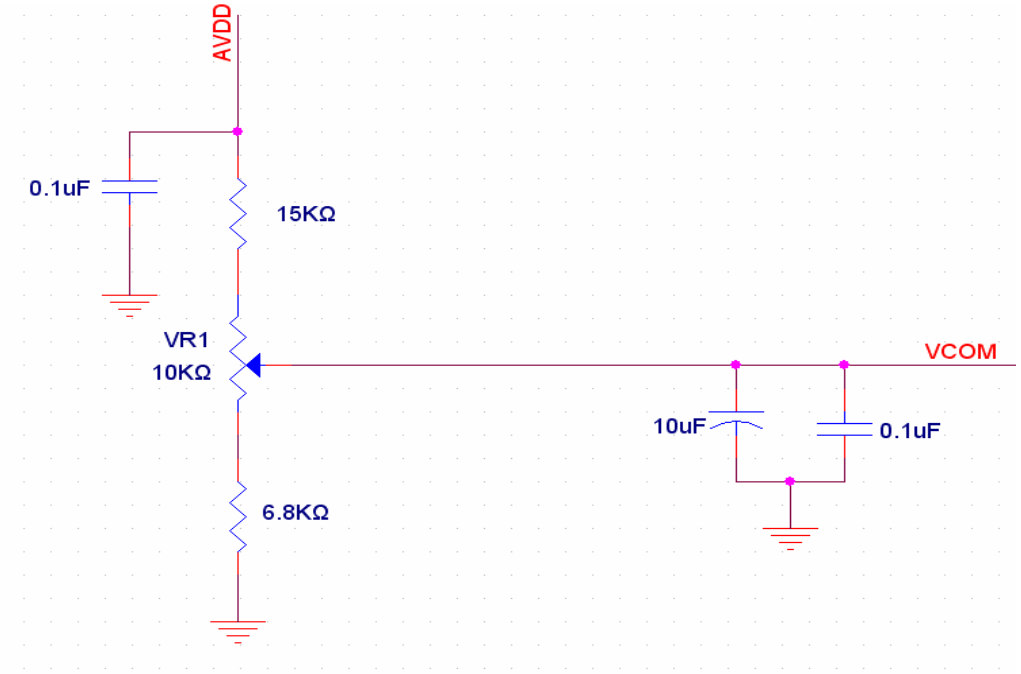

3.1.2. Current Consumption

Item	Symbol	Values			Unit	Remark
		Min.	Typ.	Max.		
Current for Driver	I_{GH}	-	0.189	0.3	mA	V_{GH} =16V
	I_{GL}	-	0.190	0.3	mA	V_{GL} = -7V
	IDV_{DD}	-	10.7	15	mA	DV_{DD} =3.3V
	IAV_{DD}	-	40	50	mA	AV_{DD} =11.5V

3.2. Power Sequence

a. Power on:

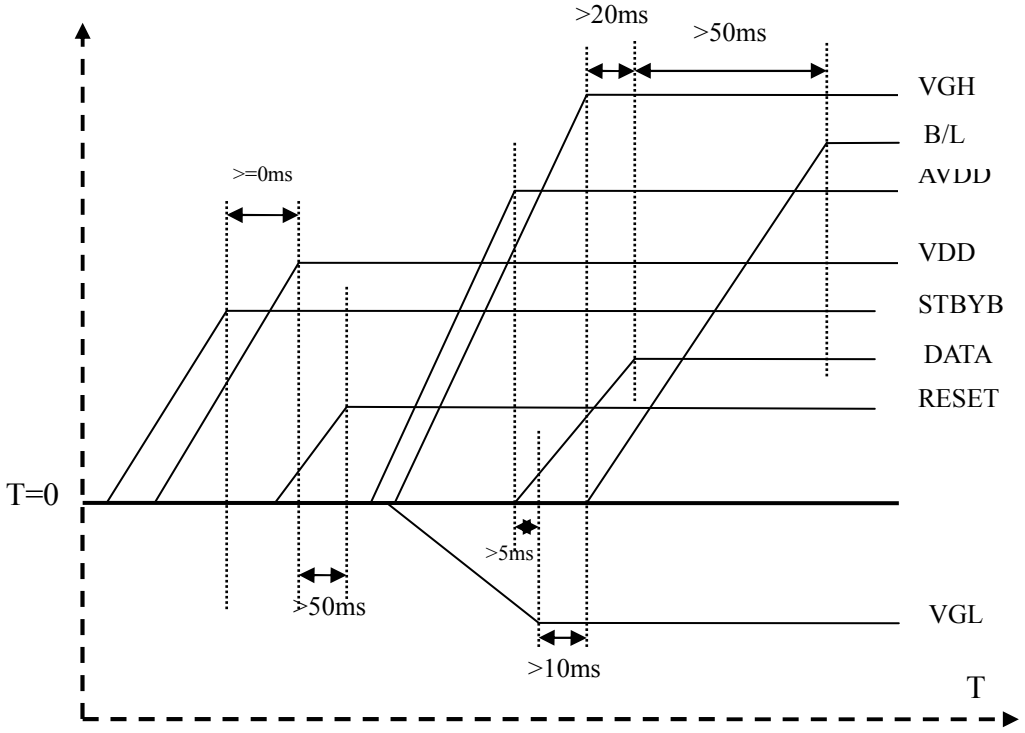

STBYB → VDD→AVDD→VGL→VGH→DATA→B/L

b. Power off:

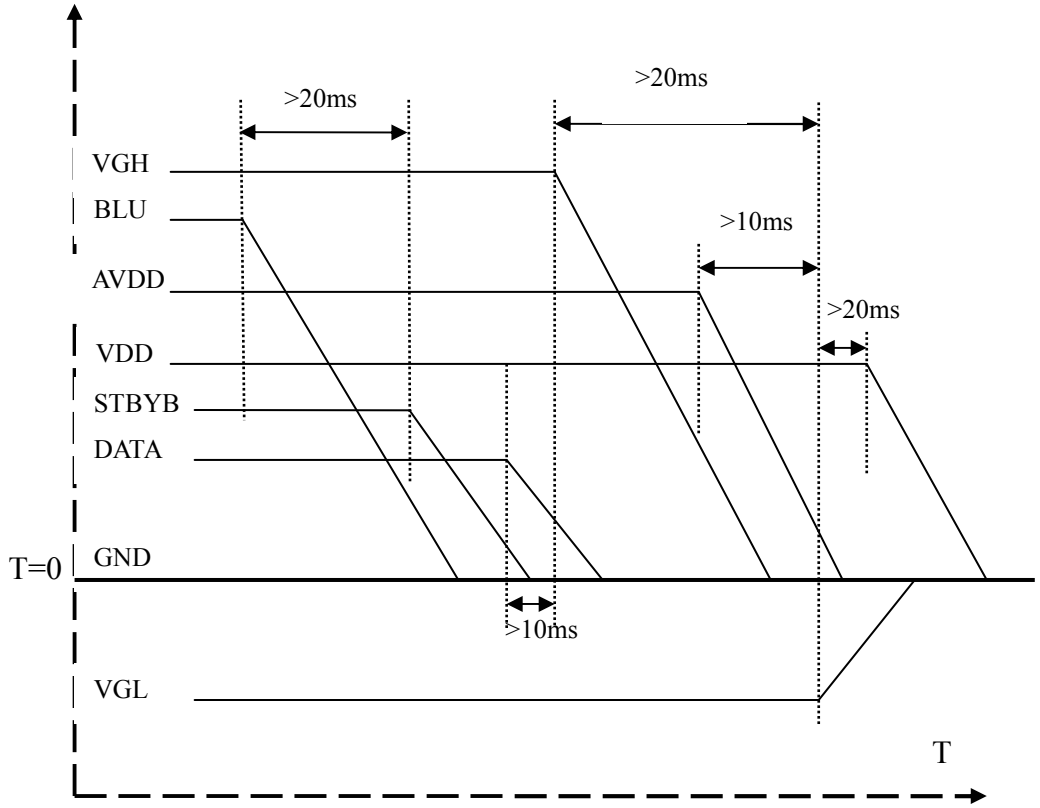

B/L→STBYB→DATA→VGH→VGL→AVDD→VDD

3.3. Timing Characteristics

3.3.1. AC Electrical Characteristics

Item	Symbol	Values			Unit	Remark
		Min.	Typ.	Max.		
DV_{DD} Power On Slew rate	T_{POR}	-	-	20	ms	From 0V to 90% DV_{DD}
RESET pulse width	T_{Rst}	50	-	-	us	CLKIN=50MHZ
DCLK cycle time	T_{coh}	20	-	-	ns	
DCLK pulse duty	T_{cwh}	40	50	60	%	
VS setup time	T_{vst}	8	-	-	ns	
VS hold time	T_{vhd}	8	-	-	ns	
HS setup time	T_{hst}	8	-	-	ns	
HS hold time	T_{hhd}	8	-	-	ns	
Data setup time	T_{dsu}	8	-		ns	
Data hole time	T_{dhd}	8	-	-	ns	
DE setup time	T_{esu}	8	-	-	ns	
DE hole time	T_{ehd}	8	-	-	ns	

3.3.2. Input Clock and Data Timing Diagram

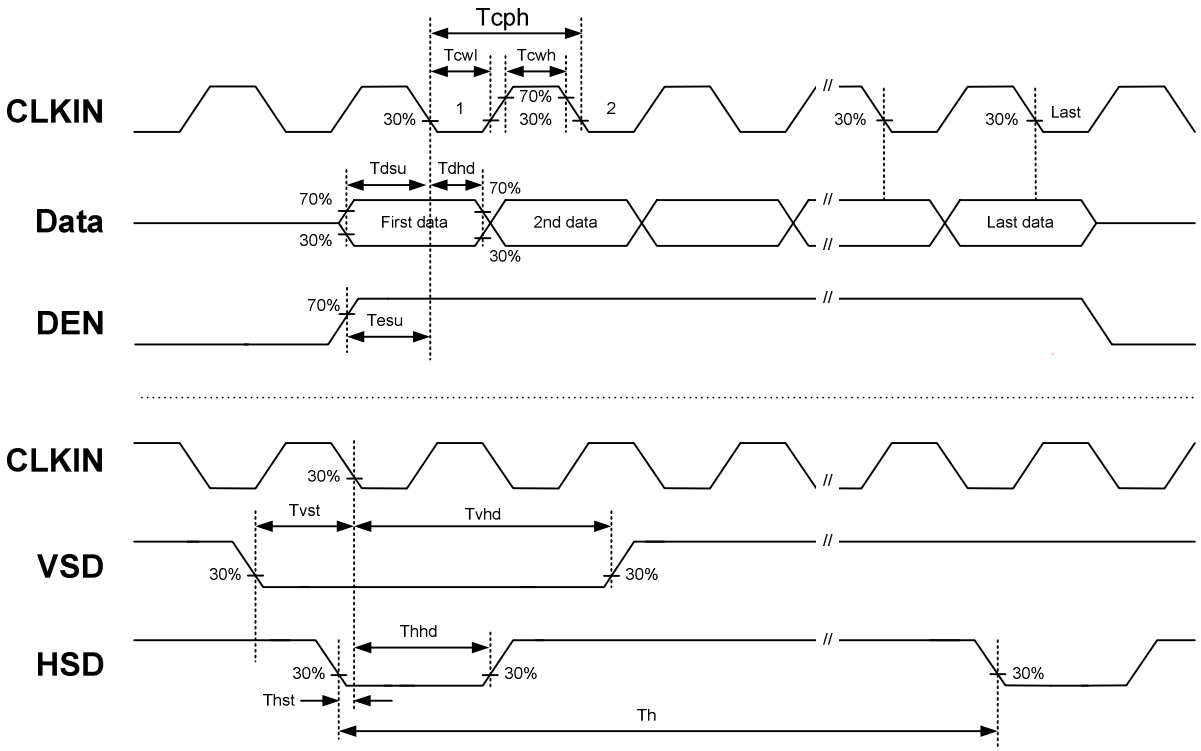

3.3.3. DC Electrical Characteristics

Parameter	Symbol	Values			Unit	Remark
		Min.	Typ.	Max.		
Low level input voltage	Vil	0	-	0.3xVDD	V	For the digital circuit
High level input voltage	Vih	0.7xVDD	-	VDD	V	For the digital circuit
Input leakage current	Ii	-	-	±1	uA	For the digital circuit
High level output voltage	Voh	VDD-0.4	-	-	V	Ioh=-400uA
Low level output voltage	Vol	-	-	GND+0.4	V	Lol=+400uA
Pull low/high resistor	Ri	200K	250K	300K	Ohm	For the digital input pin @ VDD=3.3V
Digital Operation current	Idd	-	(14)	(18)	mA	Fclk=50MHZ,FLD=48KHZ,VDD=3.3V
Digital Stand-by current	Ist1	-	(10)	(50)	uA	Clock & all functions are stopped

Analog Operating Current	Idda	-	(7)	(12)	mA	NO load,Fclk=50MHz,FLD=48KHz@ AVDD=10V V1=8V V14=0.4V
Analog Stand-by Current	Ist2	-	(10)	(50)	uA	No load,Clock & all functions are stopped
Input level of V1~V7	Vref1	0.4*AVDD	-	AVDD-1	V	Gammq correction voltage input (@cascade Mode)
Input level of V8~V10	Vref2	AGND+1	-	0.6*AVDD	V	Gammq correction voltage input (@cascade Mode)
Input level of V1~V7	Vref3	0.4*AVDD	-	AVDD-0.1	V	Gammq correction voltage input (@cascade Mode)
Input level of V8~V10	Vref4	AGND+0.1	-	0.6*AVDD	V	Gammq correction voltage input (@cascade Mode)
Output Voltage deviation	Vod1	-	±20	±35	mV	Vo=AGND+0.1V ~AGND+0.5V & Vo=AVDD-0.5V~ AVDD-0.1V
Output Voltage deviation	Vod2	-	-	±20	mV	Vo=AGND+0.5V ~AVDD-0.5V
Output Voltage Offset between Chips	Voc	-	-	±20	mV	Vo=AGND+0.5V ~AVDD-0.5V
Dynamic Range of Output	Vdr	0.1	-	AVDD-0.1	V	SO1~SO1200
Sinking Current of Outputs	IOLY	80	-	-	uA	SO1~SO1200;Vo=0.1V v.s 1.0V,AVDD=13.5V
Driving Current of Outputs	IOHY	80	-	-	uA	SO1~SO1200;Vo=13.4V v.s 12.5V,AVDD=13.5V
Resistance of Gamma Table	Rg	0.7*Rn	1.0*Rn	1.3*Rn	Ohm	Rn:Internal gamma resistor

3.3.4. Timing

Horizontal Input Timing Table

Item	Symbol	Values			Unit	Remark
		Min.	Typ.	Max.		
DClock Frequency	fclk	1	40	50	MHz	DCLK(max)= 50MHz
Horizontal display area	thd	800			DCLK	
1 Horizontal Line	th	908	1000	1088	DCLK	
HSD pulse width	thpw	1	48	87	DCLK	thb+thbw=88 DCLK is fixed
HSD Back Porch(Blanking)	thb	87	40	1	DCLK	
HSD Front Porch	thfp	20	112	200	DCLK	

Vertical Input Timing Table

Item	Symbol	Values			Unit	Remark
		Min.	Typ.	Max.		
Vertical display area	Tvd	600			H	
VSD period time	tv	644	660	839	H	
VSD pulse width	Tvpw	1	1	3	H	Tvpw+tvb=39 H is fixed
VSD Back porch(Blanking)	Tvb	38	38	36	H	
VSD Front Porch	Tvfp	5	21	200	H	

3.3.5. Data Input Format

Vertical Input Timing

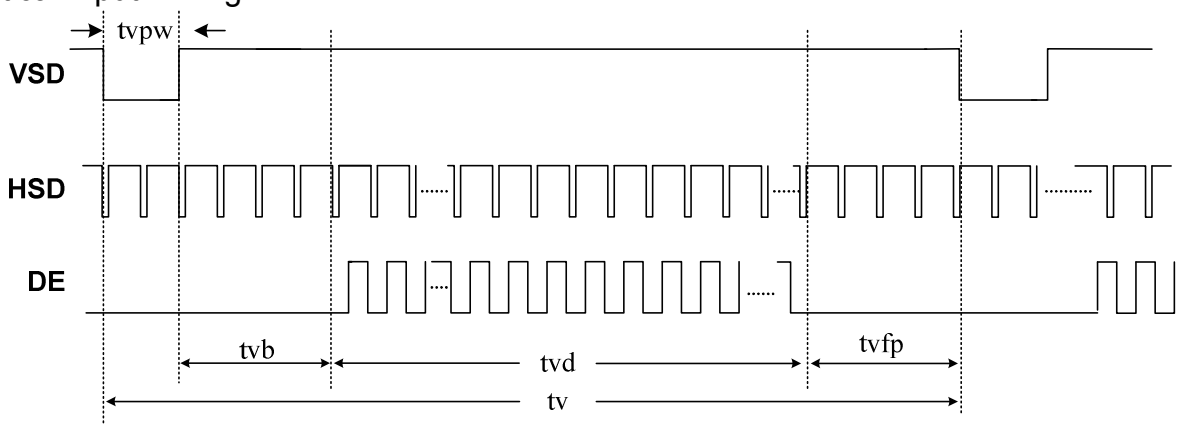

Horizontal Input Timing

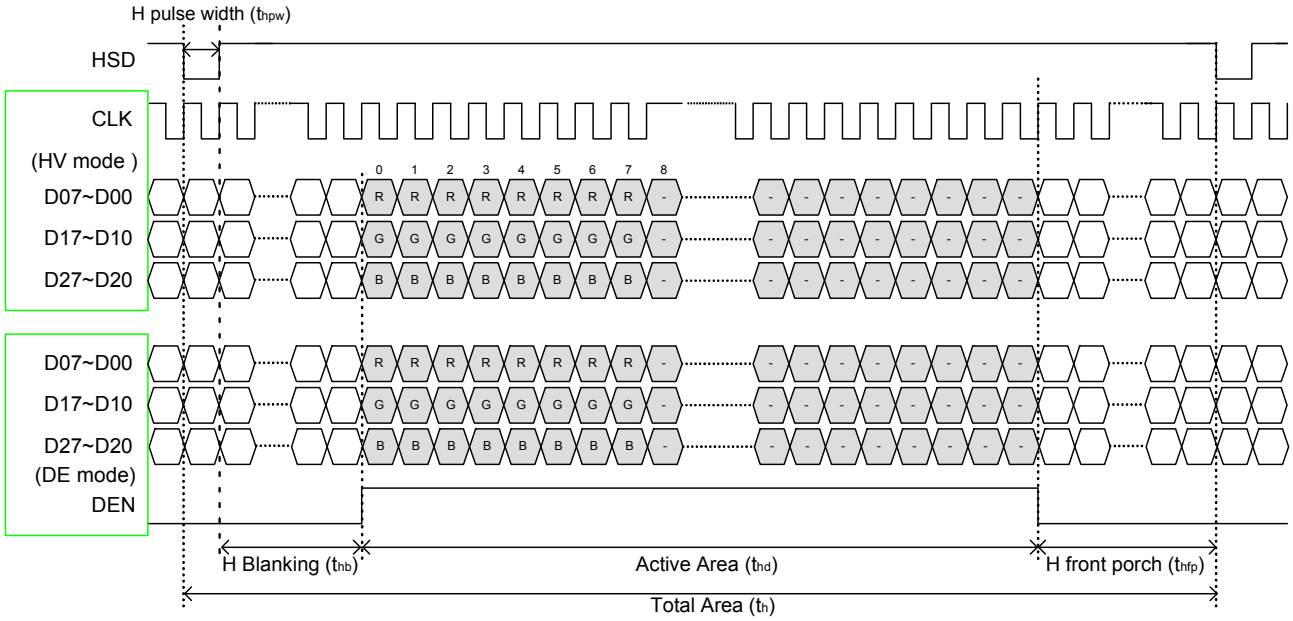

4. Optical Specifications

Note; Base on INNOLUX LCM

Item	Symbol	Condition	Values			Unit	Remark
			Min.	Typ.	Max.		
Viewing angle (CR≥ 10) B/L on	θ_L	Φ=180°(9 o'clock)	60	70	-	degree	Note 1
	θ_R	Φ=0°(3 o'clock)	60	70	-		
	θ_T	Φ=90°(12 o'clock)	40	50	-		
	θ_B	Φ=270°(6 o'clock)	60	70	-		
Response time	T_{ON}	Normal θ=Φ=0°	-	5	10	msec	Note 3
	T_{OFF}		-	15	20	msec	Note 3
Contrast ratio	CR		300	400	-	-	Note 4
Color chromaticity	W_X		0.26	0.31	0.36	-	Note 2 Note 5 Note 6
	W_Y		0.28	0.33	0.38	-	
Luminance	L		-	250		nit	

Test Conditions:

1. DV_{DD}=3.3V, I_L=160mA (Backlight current), the ambient temperature is 25℃.
2. The test systems refer to Note 2.

Note 1: Definition of viewing angle range

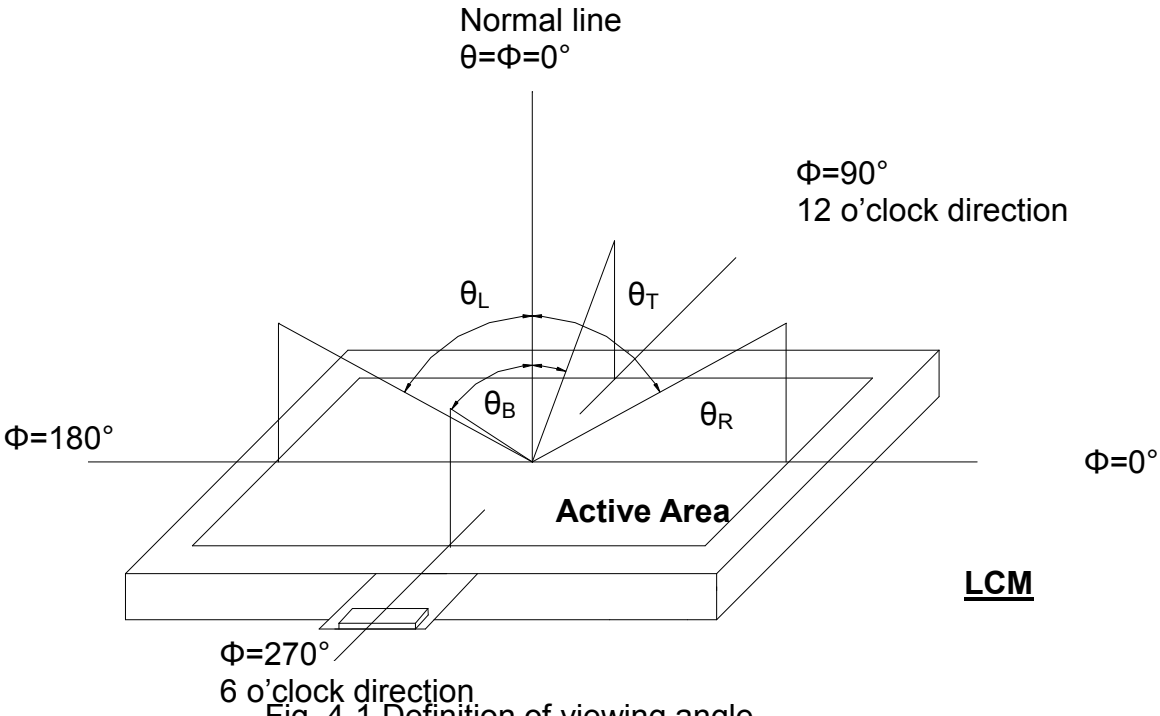

Fig. 4-1 Definition of viewing angle

Note 2: Definition of optical measurement system.
The optical characteristics should be measured in dark room. After 30 minutes operation, the optical properties are measured at the center point of the LCD screen. (Response time is measured by Photo detector TOPCON BM-7, other items are measured by BM-5A/Field of view: 1° /Height: 500mm.)

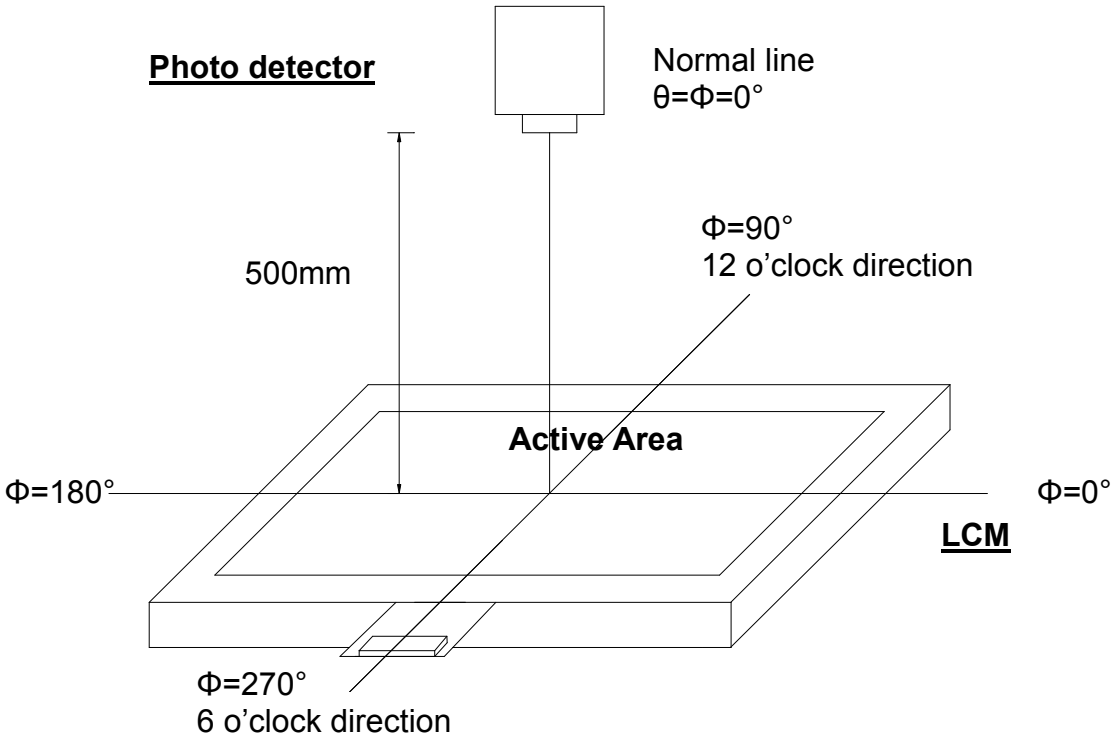

Fig. 4-2 Optical measurement system setup

Note 3: Definition of Response time

The response time is defined as the LCD optical switching time interval between "White" state and "Black" state. Rise time (T_{ON}) is the time between photo detector output intensity changed from 90% to 10%. And fall time (T_{OFF}) is the time between photo detector output intensity changed from 10% to 90%.

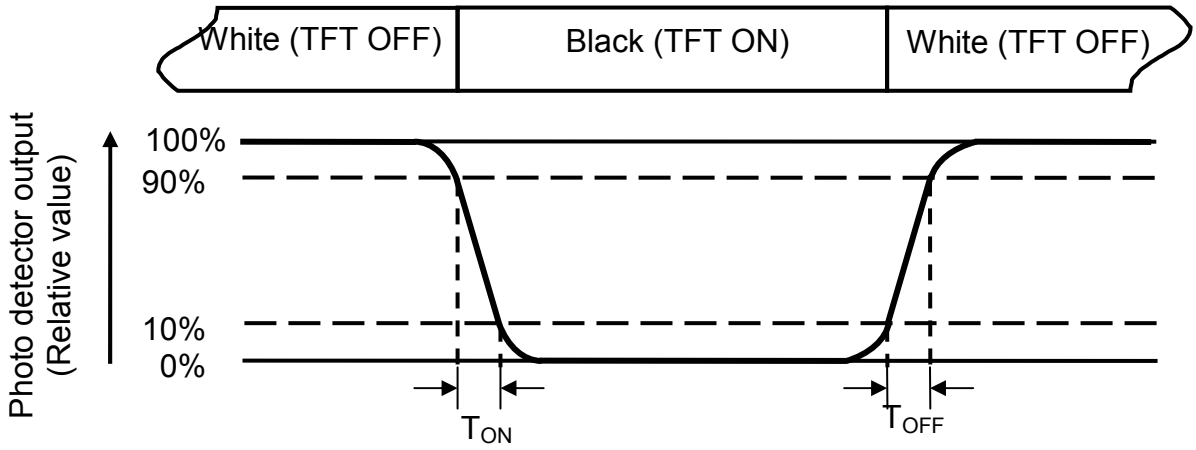

Fig. 4-3 Definition of response time

Note 4: Definition of contrast ratio

$$\text{Contrast ratio (CR)} = \frac{\text{Luminance measured when LCD on the "White" state}}{\text{Luminance measured when LCD on the "Black" state}}$$

Note 5: Definition of color chromaticity (CIE1931)

Color coordinates measured at center point of LCD.

Note 6: All input terminals LCD panel must be ground while measuring the center area of the panel. The LED driving condition is I_L=160 mA .

5. Reliability Test Items

(Note3)

Item	Test Conditions	Remark
High Temperature Storage	Ta = 80℃ 240hrs	Note 1，Note 4
Low Temperature Storage	Ta = -30℃ 240hrs	Note 1，Note 4
High Temperature Operation	Ts = 70℃ 240hrs	Note 2，Note 4
Low Temperature Operation	Ta = -20℃ 240hrs	Note 1，Note 4
Operate at High Temperature and Humidity	+60℃, 90%RH 240hrs	Note 4
Thermal Shock	-30℃/30 min ~ +80℃/30 min for a total 100 cycles, Start with cold temperature and end with high temperature.	Note 4

Note 1: Ta is the ambient temperature of samples.
Note 2: Ts is the temperature of panel's surface.
Note 3: In the standard condition, there shall be no practical problem that may affect the display function. After the reliability test, the product only guarantees operation, but don't guarantee all of the cosmetic specification.
Note 4: Before cosmetic and function test, the product must have enough recovery time, at least 2 hours at room temperature.

6. General Precautions

6.1. Safety

Liquid crystal is poisonous. Do not put it in your mouth. If liquid crystal touches your skin or clothes, wash it off immediately by using soap and water.

6.2. Handling

1. The LCD panel is plate glass. Do not subject the panel to mechanical shock or to excessive force on its surface.
2. The polarizer attached to the display is easily damaged. Please handle it carefully to avoid scratch or other damages.
3. To avoid contamination on the display surface, do not touch the module surface with bare hands.
4. Keep a space so that the LCD panels do not touch other components.
5. Put cover board such as acrylic board on the surface of LCD panel to protect panel from damages.
6. Transparent electrodes may be disconnected if you use the LCD panel under environmental conditions where the condensation of dew occurs.
7. Do not leave module in direct sunlight to avoid malfunction of the ICs.

6.3. Static Electricity

1. Be sure to ground module before turning on power or operating module.
2. Do not apply voltage which exceeds the absolute maximum rating value.

6.4. Storage

1. Store the module in a dark room where must keep at 25±10℃ and 65%RH or less.
2. Do not store the module in surroundings containing organic solvent or corrosive gas.
3. Store the module in an anti-electrostatic container or bag.

6.5. Cleaning

1. Do not wipe the polarizer with dry cloth. It might cause scratch.
2. Only use a soft sloth with IPA to wipe the polarizer, other chemicals might permanent damage to the polarizer.

7. Mechanical Drawing

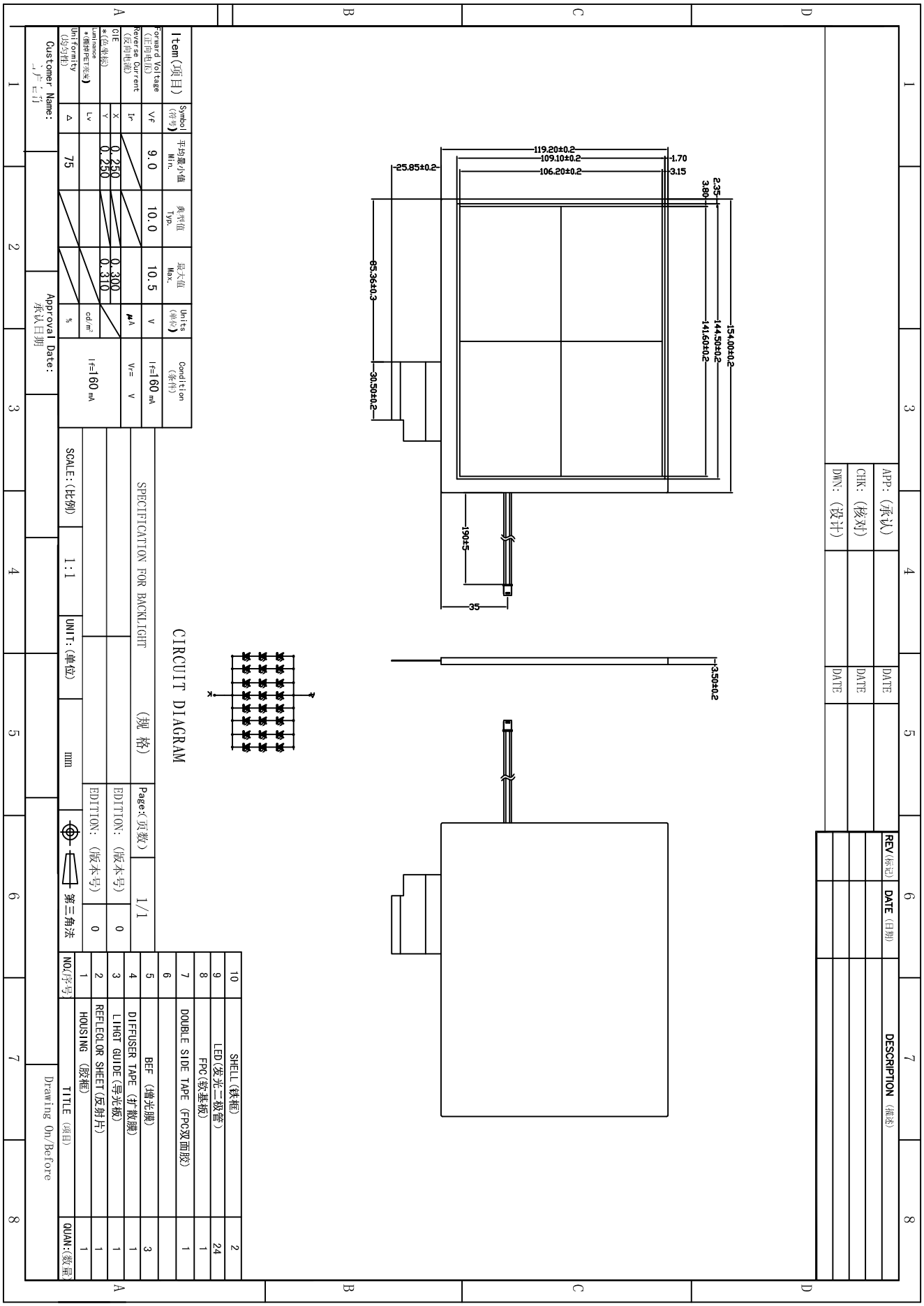

8. Package Drawing