◆ DIMENSIONAL OUTLINE

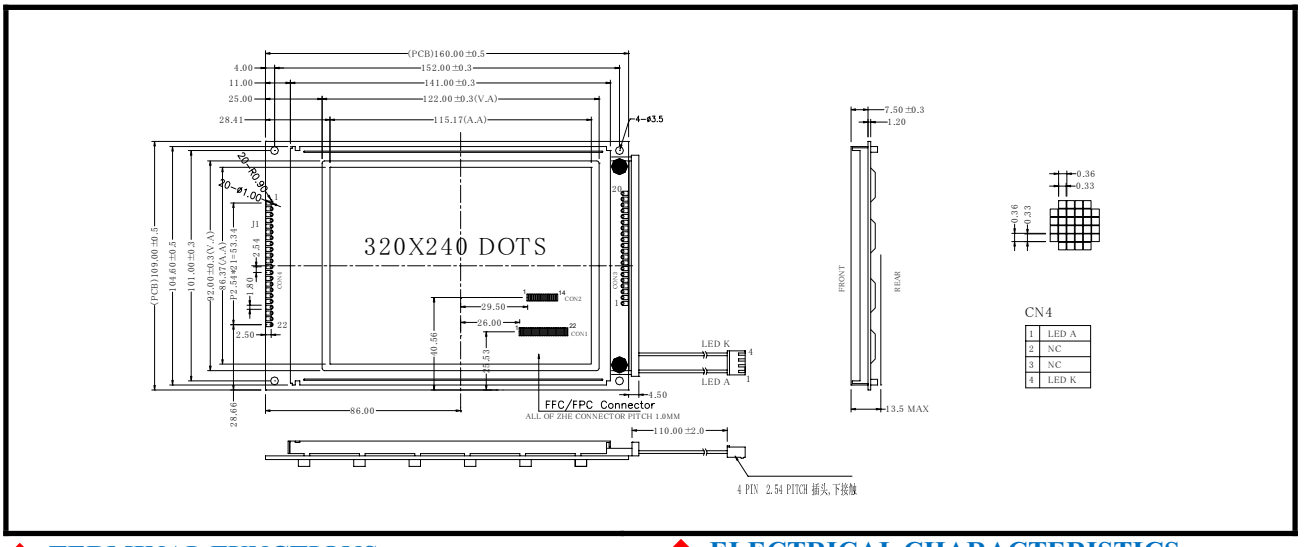

◆ TERMINAL FUNCTIONS

CON1/CON4		CON2		CON3	
Pin	Name	Pin	Name	Pin	Name
1	VSS	1-4	D0-D3	1	VSS
2	VDD	5	DISP	2	VDD
3	V0	6	YD	3	V0
4	A0	7	M	4	A0
5	/WR(R/W)	8-9	CL1-CL2	5	/WR(R/W)
6	/RD(E)	10	VDD	6	/RD(E)
7-14	D0-D7	11	VSS	7-14	D0-D7
15	/CS	12	Vout	15	/CS
16	/RST	13	V0	16	/RST
17	VOUT	14	VSS	17	VOUT
18	C86			18	C86
19	LED+			19	LED+
20	LED-			20	LED-
21	NC				
22	NC				

◆ DISPLAY CHARACTERISTICS

Item	Value
Viewing Direction	6: 00
Drive Method	1/240 duty,1/16 bias

◆ MECHANICAL DATA

Item	Value
Outline(mm)	160.0×109.0×13.5 MAX
Viewing Area(mm)	122.0×92.0
Active Area(mm)	115.17×86.37
Dot Pitch(mm)	0.36×0.36
Dot size(mm)	0.33×0.33

◆ ABSOLUTE MAXIMUM

Item	Sym	Min	Max
Operating Voltage(V)	VDD	-0.3	7.0
Operating Temperature(℃)	TOP	-20	70
Storage Temperature(℃)	TST	-30	80

◆ ELECTRICAL CHARACTERISTICS

Item	Sym	Min	Typ	Max
Operating Voltage(V)	VDD	4.8	5.0	5.2
Input High Voltage(V)	VIH	0.5VDD	--	VDD
Input Low Voltage(V)	VIL	VSS	--	0.2VDD
LED Forward Voltage(V)	Vf	4.8	5.0	5.2
LED Forward Current(mA)	If	--	--	120
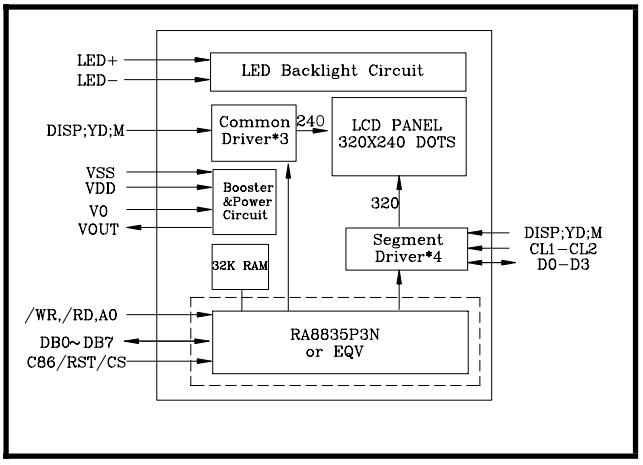
◆ BLOCK DIAGRAM