1. General Description

The LP156WF4 is a Color Active Matrix Liquid Crystal Display with an integral LED backlight system. The matrix employs a-Si Thin Film Transistor as the active element. It is a transmissive type display operating in the normally black mode. This TFT-LCD has 15.6 inches diagonally measured active display area with FHD resolution (1920 horizontal by 1080 vertical pixel array). Each pixel is divided into Red, Green and Blue sub-pixels or dots which are arranged in vertical stripes. Gray scale or the brightness of the sub-pixel color is determined with a 6-bit gray scale signal for each dot, thus, presenting a palette of more than 262,144 colors. The LP156WF4 has been designed to apply the interface method that enables low power, high speed, low EMI. The LP156WF4 is intended to support applications where thin thickness, low power are critical factors and graphic displays are important. In combination with the vertical arrangement of the sub-pixels, the LP156WF4 characteristics provide an excellent flat display for office automation products such as Notebook PC.

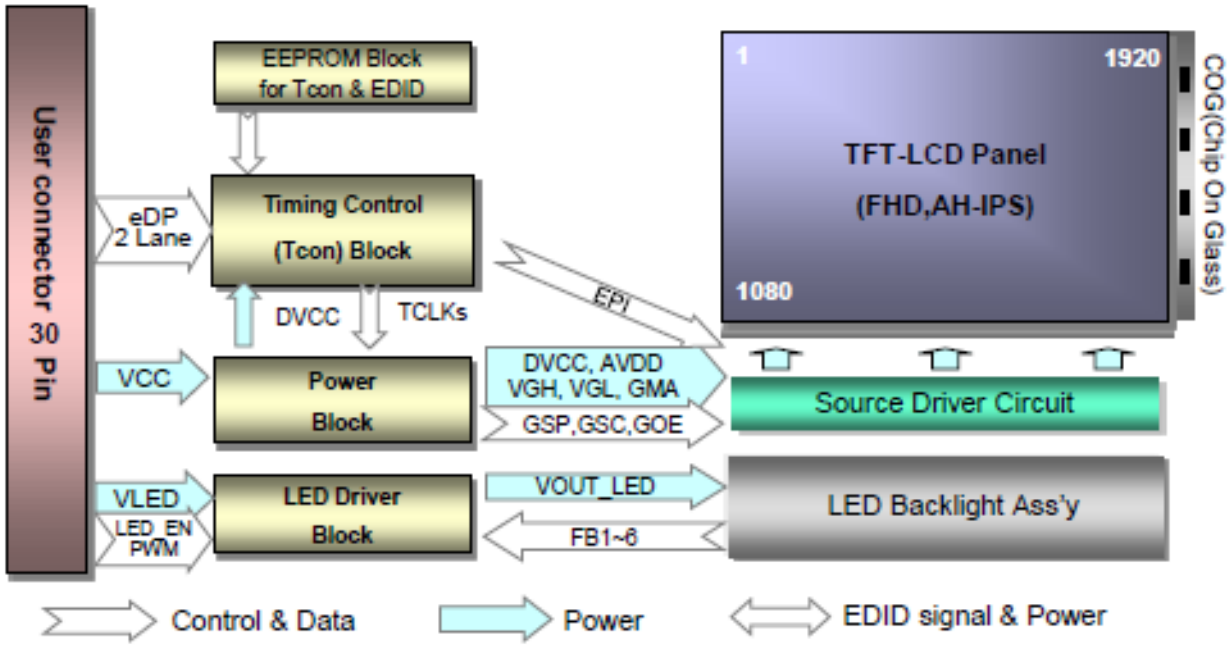

General Features

Active Screen Size	15.6 inches diagonal
Outline Dimension	359.5 (H, Typ.) × 223.8 (V, Typ.) × 3.2 (D, Max.) [mm] (with Bracket & PCB Board)
Pixel Pitch	0.17925 mm x 0.17925 mm
Pixel Format	1920 horiz. By 1080 vert. Pixels RGB strip arrangement
Color Depth	6-bit, 262,144 colors
Luminance, White	330 cd/m^2 (Typ. 5 point)
Power Consumption	Total 5.6W (Typ.) Logic : 1.0W (Typ. @ Mosaic), B/L : 4.6W (Typ. @VLED12V)
Weight	350g (Max.) / 340g (Typ.)
Display Operating Mode	Normally Black
Surface Treatment	Glare treatment of the front Polarizer
RoHS Compliance	Yes
BFR / PVC / As Free	Yes for all

2. Absolute Maximum Ratings

The following are maximum values which, if exceeded, may cause faulty operation or damage to the unit.

Table 1. ABSOLUTE MAXIMUM RATINGS

Parameter	Symbol	Values		Units	Notes
		Min	Max		
Power Input Voltage	VCC	-0.3	4.0	Vdc	at 25 ± 5°C
Operating Temperature	T_{OP}	0	50	°C	1
Storage Temperature	H_{ST}	-20	60	°C	1
Operating Ambient Humidity	H_{OP}	10	90	%RH	1
Storage Humidity	H_{ST}	10	90	%RH	1

Note : 1. Temperature and relative humidity range are shown in the figure below.
Wet bulb temperature should be 39°C Max, and no condensation of water.

Note : 2. Storage Condition is guaranteed under packing condition.

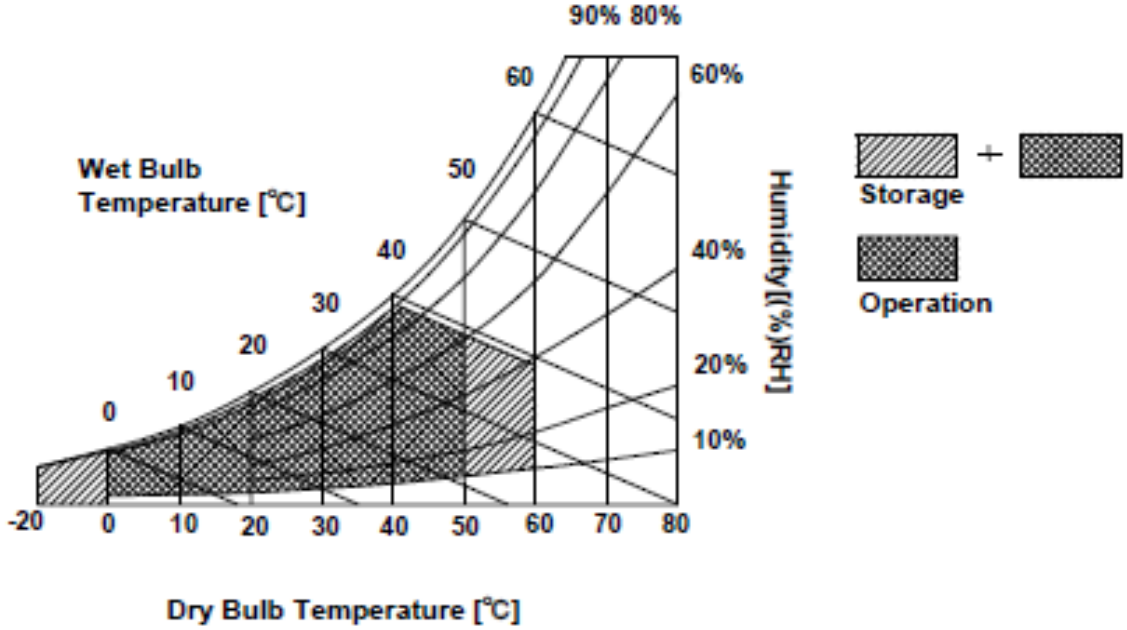

3. Electrical Specifications

3-1. Electrical Characteristics

The LP156WF4 requires two power inputs. The first logic is employed to power the LCD electronics and to drive the TFT array and liquid crystal. The second backlight is the input about LED BL with LED Driver.

Table 2. ELECTRICAL CHARACTERISTICS

Parameter		Symbol	Values			Unit	Notes
			Min	Typ	Max		
LOGIC :							
Power Supply Input Voltage		Vcc	3.0	3.3	3.6	V	1
Power Supply Input Current	Mosaic	Icc	-	310	360	mA	2
Power Consumption		Pcc	-	1.0	1.2	W	2
Power Supply Inrush Current		Icc_P	-	-	1500	mA	3
Differential Impedance		Zm	90	100	110	Ω	4
BACKLIGHT : (with LED Driver)							
LED Power Input Voltage		VLED	7.0	12.0	21.0	V	5
LED Power Input Current		ILED	-	385	395	mA	6
LED Power Consumption		PLED	-	4.6	4.7	W	6
LED Power Inrush Current		ILED_P	-	-	1500	mA	7
PWM Duty Ratio			5	-	100	%	8
PWM Jitter		-	0	-	0.2	%	9
PWM Impedance		ZPWM	20	40	60	kΩ	
PWM Frequency		FPWM	200	-	1000	Hz	10
PWM High Level Voltage		V_{PWM_H}	3.0	-	5.3	V	
PWM Low Level Voltage		V_{PWM_L}	0	-	0.3	V	
LED_EN Impedance		ZPWM	20	40	60	kΩ	
LED_EN High Voltage		VLED_EN_H	3.0	-	5.3	V	
LED_EN Low Voltage		VLED_EN_L	0	-	0.3	V	
Life Time			10,000	-	-	Hrs	11

Note)

1. The measuring position is the connector of LCM and the test conditions are under 25℃, fv = 60Hz, Black pattern.
2. The specified Icc current and power consumption are under the Vcc = 3.3V , 25℃, fv = 60Hz condition and Mosaic pattern.

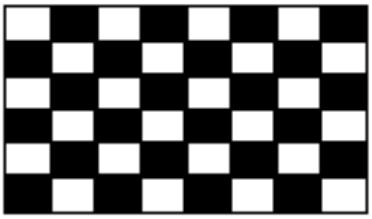

2. This Spec. is the max load condition for the cable impedance designing.
3. The below figures are the measuring Vcc condition and the Vcc control block used.
   The Vcc condition is same as the minimum of T1 at Power on sequence.

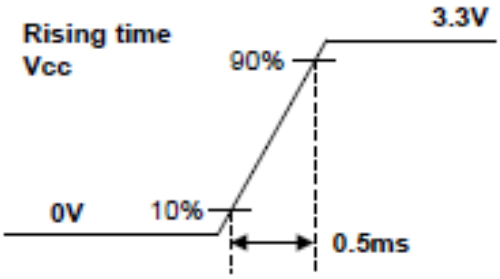

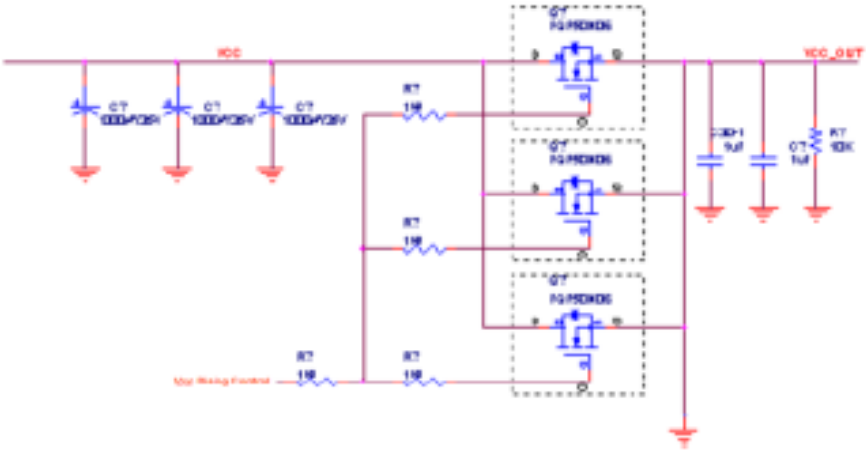

4. This impedance value is needed for proper display and measured form eDP Tx to the mating connector.
5. The measuring position is the connector of LCM and the test conditions are under 25℃.
6. The current and power consumption with LED Driver are under the Vled = 12.0V , 25℃, Dimming of Max luminance and White pattern with the normal frame frequency operated(60Hz).
7. The below figures are the measuring Vled condition and the Vled control block used.
   VLED control block is same with Vcc control block.

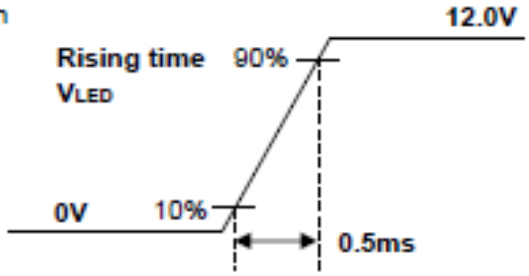

8. The operation of LED Driver below minimum dimming ratio may cause flickering or reliability issue.
9. If Jitter of PWM is bigger than maximum, it may induce flickering.
10. This Spec. is not effective at 100% dimming ratio as an exception because it has DC level equivalent to 0Hz. In spite of acceptable range as defined, the PWM Frequency should be fixed and stable for more consistent brightness control at any specific level desired.
11. The life time is determined as the time at which brightness of LCD is 50% compare to that of minimum

3-2. Interface Connections

This LCD employs two interface connections, a 30 pin connector used for the module electronics interface and the other connector used for the integral backlight system.

Table 3. MODULE CONNECTOR PIN CONFIGURATION (CN1)

Pin	Symbol	Description	Notes
1	NC	No Connection	**[Interface Chip]** 1. LCD : TLI, TL2370DP (LCD Controller Including eDP Receiver. 2. System : TBD or equivalent * Pin to Pin compatible with eDP **[Connector]** KN38-30S-0.5H, HRS, 30, 0.5 or its compatibles **[Connector pin arrangement]** 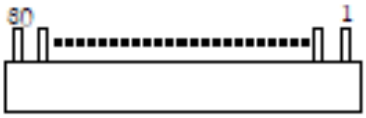 [LCD Module Rear View] P-Vcom Share pin] 1. Pin for P-Vcom : #24, #25 2. P-Vcom Address : 01010000
2	GND	High Speed (Main Link) Ground	
3	Lane1_N	Complement Signal-Lane 1	
4	Lane1_p	True Signal-Main Lane 1	
5	GND	High Speed (Main Link) Ground	
6	Lane0_N	Complement Signal-Lane 0	
7	Lane0_p	True Signal-Main Lane 0	
8	GND	High Speed (Main Link) Ground	
9	AUX_P	True Signal-Auxiliary Channel	
10	AUX_N	Complement Signal-Auxiliary Channel	
11	GND	High Speed (Main Link) Ground	
12	VCC	LCD Logic and driver power (3.3V Typ.)	
13	VCC	LCD Logic and driver power (3.3V Typ.)	
14	NC	No Connection	
15	GND	LCM Ground	
16	GND	LCM Ground	
17	HPD	HPD signal pin	
18	GND	LCM Ground (LED Backlight Ground)	
19	GND	LCM Ground (LED Backlight Ground)	
20	GND	LCM Ground (LED Backlight Ground)	
21	GND	LCM Ground (LED Backlight Ground)	
22	LED_EN	LED Backlight On/Off	
23	PWM	System PWM Signal Input for dimming	
24	NC	No Connection	
25	NC	No Connection	
26	VLED	LED Backlight Power (7.0V-21V)	
27	VLED	LED Backlight Power (7.0V-21V)	
28	VLED	LED Backlight Power (7.0V-21V)	
29	VLED	LED Backlight Power (7.0V-21V)	
30	NC	No Connection	

3-3. eDP Signal Timing Specifications

3-3-1. DC Specification

The VESA Display Port related AC specification is compliant with the VESA Display Port Standard v1.1a.

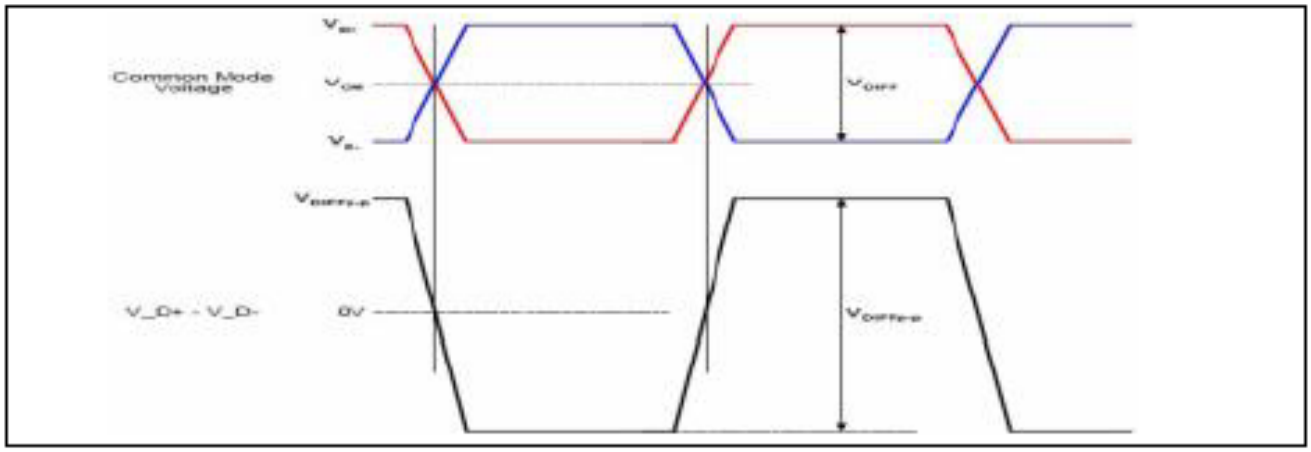

Description	Symbol	Min	Max	Unit	Notes
Differential peak-to-peak Input voltage	VDIFF p-p	120	-	mV	For high bit rate
		40	-		For reduced bit rate
Rx DC common mode voltage	VCM	0	2.0	V	-

3-3-2. AC Specification

The VESA Display Port related AC specification is compliant with the VESA Display Port Standard v1.1a.

Description	Symbol	Min	Typ	Max	Unit	Notes
Unit Interval for high bit rate (2.7Gbps/lane)	UI_High_Rate	-	370	-	ps	Range is nominal ±350ppm. DisplayPort Link Rx does not require local crystal for link clock generation
Unit Interval for high bit rate (1.62Gbps/lane)	UI_Low_Rate	-	617	-	ps	
Lane-to-Lane skew	V Rx-SKEW-INTER_PAIR	-	-	5200	ps	-
Lane intra-pair skew	V Rx-SKEW-INTRA_PAIR	-	-	100	ps	For high bit rate
		-	-	300	ps	For reduced bit rate

3-4. Signal Timing Specifications

This is the signal timing required at the input of the User connector. All of the interface signal timing should be satisfied with the following specifications and specifications of eDP Tx/Rx for its proper operation.

Table 6. TIMING TABLE

ITEM	Symbol		Min	Typ	Max	Unit	Note
DCLK	Frequency	f_{CLK}	-	138.7	-	MHz	eDP 2 Lane
Hsync	Period	t_{HP}	-	2080	-	tCLK	
	Width	t_{WH}	-	32	-		
	Width-Active	t_{WHA}	-	1920	-		
Vsync	Period	t_{VP}	-	1111	-	tHP	
	Width	t_{WV}	-	5	-		
	Width-Active	t_{WVA}	-	1080	-		
Data Enable	Horizontal back porch	t_{HBP}	-	80	-	tCLK	
	Horizontal front porch	t_{HFP}	-	48	-		
	Vertical back porch	t_{VBP}	-	23	-	tHP	
	Vertical front porch	t_{VFP}	-	3	-		

Appendix) all reliabilities are specified for timing specification based on refresh rate of 60Hz. However, LP156WF4 has a good actual performance even at lower refresh rate (e.g. 40Hz or 50Hz) for power saving mode, whereas LP156WF4 is secured only for function under lower refresh rate. 60Hz at Normal mode, 50Hz, 40Hz at Power save mode. Don't care Flicker level (power save mode).

3-5. Signal Timing Waveforms

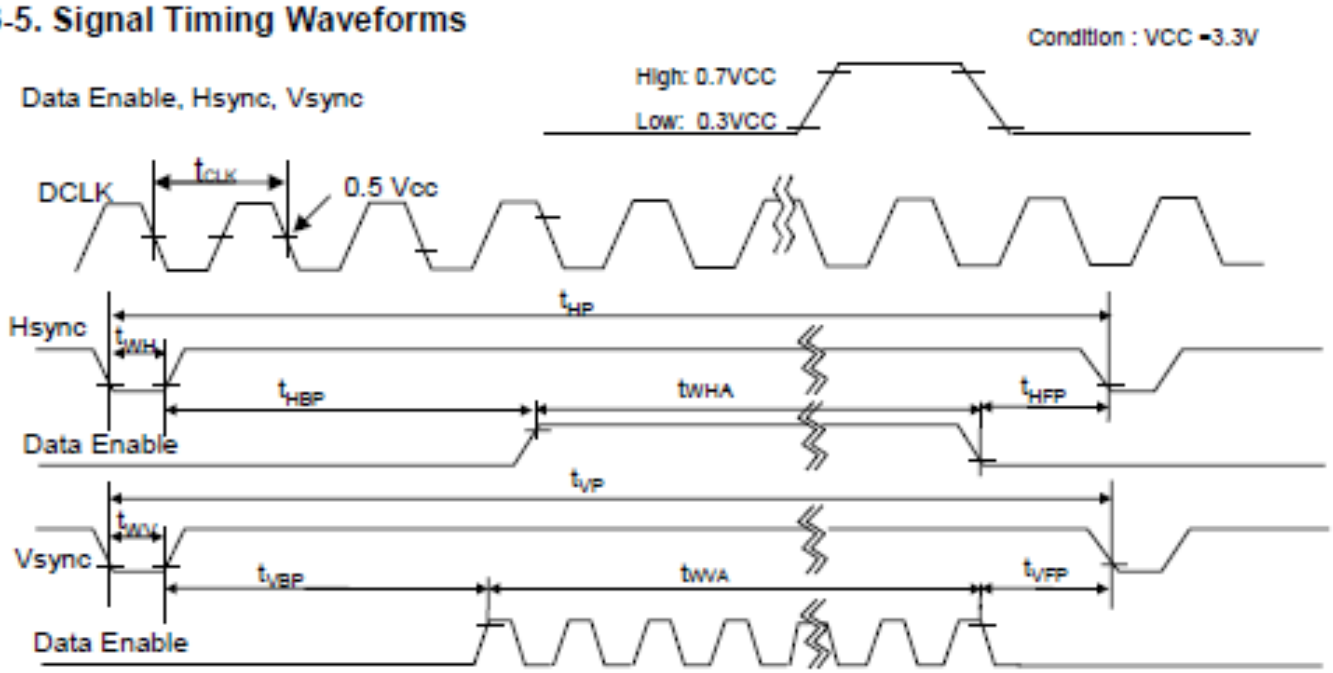

3-6. Color Input Data Reference

The brightness of each primary color (red, green and blue) is based on the 6-bit gray scale data input for the color ; the higher the binary input, the brighter the color. The table below provides a reference for color versus data input.

Table 5. COLOR DATA REFERENCE

Color		Input Color Data																	
		RED						GREEN						BLUE					
		MSB					LSB	MSB					LSB	MSB					LSB
		R5	R4	R3	R2	R1	R0	G5	G4	G3	G2	G1	G0	B5	B4	B3	B2	B1	B0
Basic Color	Black	0	0	0	0	0	0	0	0	0	0	0	0	0	0	0	0	0	0
	Red	1	1	1	1	1	1	0	0	0	0	0	0	0	0	0	0	0	0
	Green	0	0	0	0	0	0	1	1	1	1	1	1	0	0	0	0	0	0
	Blue	0	0	0	0	0	0	0	0	0	0	0	0	1	1	1	1	1	1
	Cyan	0	0	0	0	0	0	1	1	1	1	1	1	1	1	1	1	1	1
	Magenta	1	1	1	1	1	1	0	0	0	0	0	0	1	1	1	1	1	1
	Yellow	1	1	1	1	1	1	1	1	1	1	1	1	0	0	0	0	0	0
	White	1	1	1	1	1	1	1	1	1	1	1	1	1	1	1	1	1	1
RED	RED (00)	0	0	0	0	0	0	0	0	0	0	0	0	0	0	0	0	0	0
	RED (01)	0	0	0	0	0	1	0	0	0	0	0	0	0	0	0	0	0	0
	...	...						...						...					
	RED (62)	1	1	1	1	1	0	0	0	0	0	0	0	0	0	0	0	0	0
	RED (63)	1	1	1	1	1	1	0	0	0	0	0	0	0	0	0	0	0	0
GREEN	GREEN (00)	0	0	0	0	0	0	0	0	0	0	0	0	0	0	0	0	0	0
	GREEN (01)	0	0	0	0	0	0	0	0	0	0	0	1	0	0	0	0	0	0
	...	...						...						...					
	GREEN (62)	0	0	0	0	0	0	1	1	1	1	1	0	0	0	0	0	0	0
	GREEN (63)	0	0	0	0	0	0	1	1	1	1	1	1	0	0	0	0	0	0
BLUE	BLUE (00)	0	0	0	0	0	0	0	0	0	0	0	0	0	0	0	0	0	0
	BLUE (01)	0	0	0	0	0	0	0	0	0	0	0	0	0	0	0	0	0	1
	...	...						...						...					
	BLUE (62)	0	0	0	0	0	0	0	0	0	0	0	0	1	1	1	1	1	0
	BLUE (63)	0	0	0	0	0	0	0	0	0	0	0	0	1	1	1	1	1	1

3-7. Power Sequence

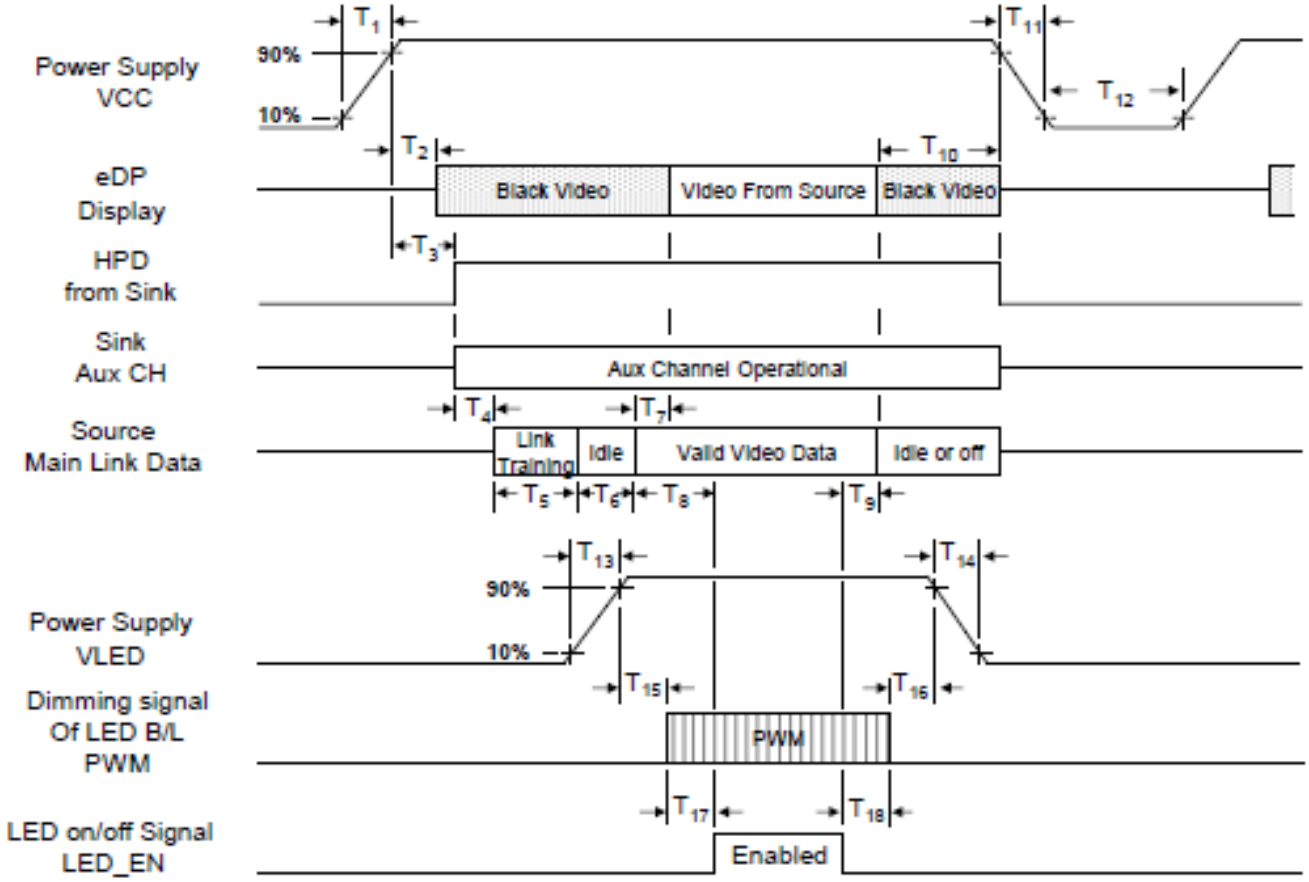

Table 6. POWER SEQUENCE TABLE

Timing	Required By	Limits		Units	Notes
		Min	Max		
T_1	Source	0.5	10	ms	-
T_2	Sink	0	200	ms	-
T_3	Sink	0	200	ms	-
T_4	Source	-	-	ms	-
T_5	Source	-	-	ms	-
T_6	Source	-	-	ms	-
T_7	Sink	0	50	ms	-
T_8	Source	-	-	ms	LGD recommend Min 200ms
T_9	Source	-	-	ms	-

Timing	Required By	Limits		Units	Notes
		Min	Max		
T_{10}	Source	0	500	ms	-
T_{11}	Source	-	10	ms	-
T_{12}	Source	500	-	ms	
T_{13}	Source	0.5	10	ms	-
T_{14}	Source	0.5	10	ms	-
T_{15}	Source	10	-	ms	-
T_{16}	Source	10	-	ms	-
T_{17}	Source	0	-	ms	-
T_{18}	Source	0	-	ms	-

Note) 1. Do not insert the mating cable when system turn on.
2. Valid Data have to meet "3-3. eDP Signal Timing Specifications"
3. Video Signal, LED_EN and PWM need to be on pull-down condition on invalid status.
4. recommend the rising sequence of VLED after the Vcc and valid status of Video Signal turn on.

4. Optical Specification

Optical characteristics are determined after the unit has been 'ON' and stable for approximately 30 minutes in a dark environment at 25°C. The values specified are at an approximate distance 50cm from the LCD surface at a viewing angle of Φ and Θ equal to 0°.
FIG. 1 presents additional information concerning the measurement equipment and method.

FIG. 1 Optical Characteristic Measurement Equipment and Method

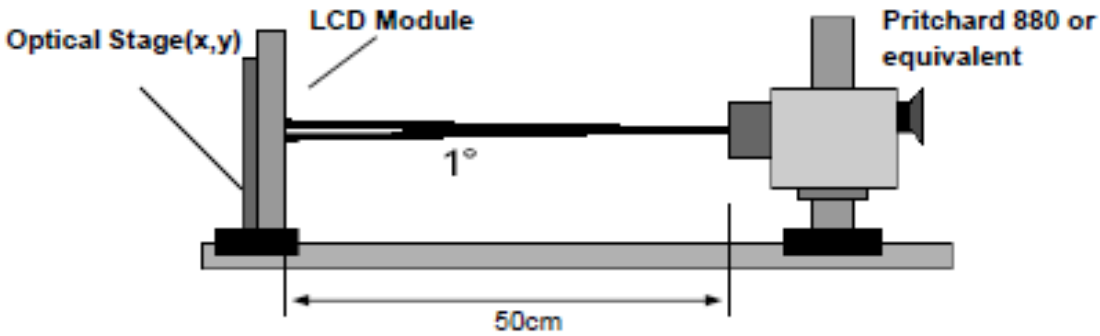

Table 9. OPTICAL CHARACTERISTICS

Ta=25°C, VCC=3.3V, fv=60Hz, f_{CLK}= 138.7MHz

Parameter	Symbol	Values			Units	Notes
		Min	Typ	Max		
Contrast Ratio	CR	400	700	-		1
Surface Luminance, white	L_{WH}	280	330	-	cd/m²	2
Luminance Variation	δ_{WHITE}	-	1.4	1.6		3
Response Time	$Tr_R + Tr_D$	-	35	50	ms	4
Color Coordinates						
RED	RX	0.615	0.645	0.675		
	RY	0.310	0.340	0.370		
GREEN	GX	0.296	0.326	0.356		
	GY	0.600	0.630	0.660		
BLUE	BX	0.125	0.155	0.185		
	BY	0.002	0.032	0.062		
WHITE	WX	0.283	0.313	0.343		
	WY	0.299	0.329	0.359		
Viewing Angle						5
x axis, right(Φ=0°)	Θr	80		-	degree	
x axis, left (Φ=180°)	Θl	80		-	degree	
y axis, up (Φ=90°)	Θu	80		-	degree	
y axis, down (Φ=270°)	Θd	80		-	degree	
Gray Scale						6

Note)

1. It should be measured in the center of screen(1 Point). Contrast Ratio (CR) is defined mathematically as

$$\text{Contrast Ratio(1 Point)} = \frac{\text{Surface Luminance with all white pixels}}{\text{Surface Luminance with all black pixels}}$$

2. Surface luminance is the average of 5 point across the LCD surface 50cm from the surface with all pixels displaying white. For more information see FIG 1.

LWH = Average(L1,L2, ... L5)

3. The variation in surface luminance , The panel total variation (δ WHITE) is determined by measuring LN at each test position 1 through 13 and then defined as following numerical formula. For more information see FIG 2.

δ WHITE = Maximum(L1,L2, ... L13) / Minimum(L1,L2, ... L13)

4. Response time is the time required for the display to transition from white to black (rise time, TrR) and from black to white (Decay Time, TrD). For additional information see FIG 3.

5. Viewing angle is the angle at which the contrast ratio is greater than 10. The angles are determined for the horizontal or x axis and the vertical or y axis with respect to the z axis which is normal to the LCD surface. For more information see FIG 4.

6. Gray scale specification

* fV = 60Hz

Gray Level	Luminance [%] (Typ)
L0	0.10
L7	0.91
L15	6.35
L23	14.92
L31	25.58
L39	38.55
L47	53.75
L55	72.95
L63	100

FIG. 2 Luminance

<Measuring point for Average Luminance & measuring point for Luminance variation>

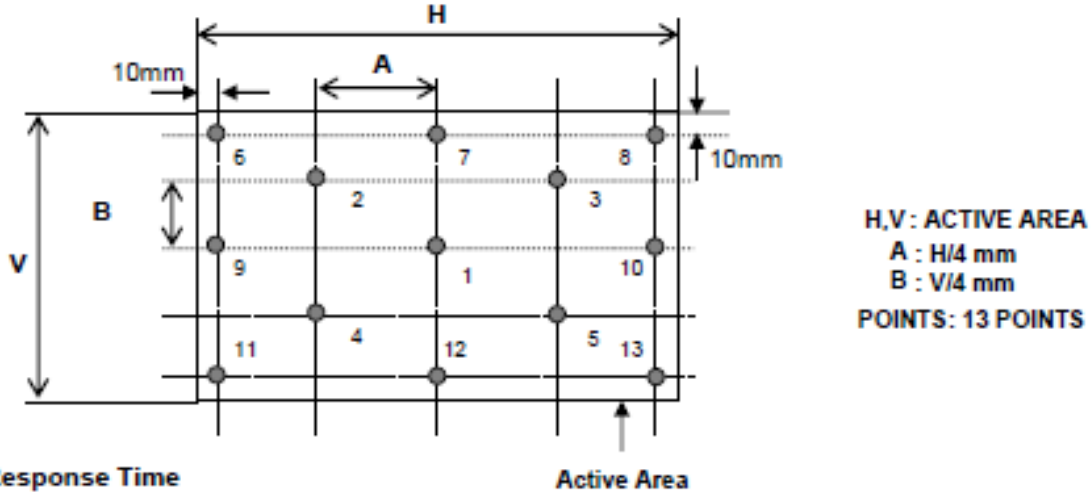

FIG. 3 Response Time

The response time is defined as the following figure and shall be measured by switching the input signal for "black" and "white".

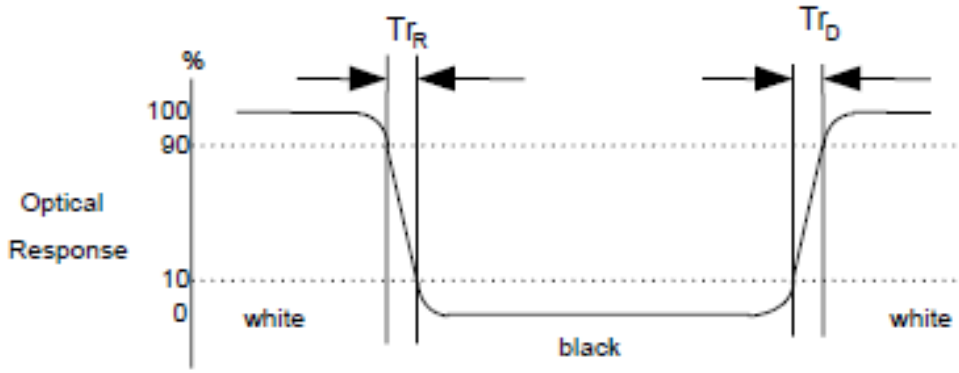

FIG. 4 Viewing angle

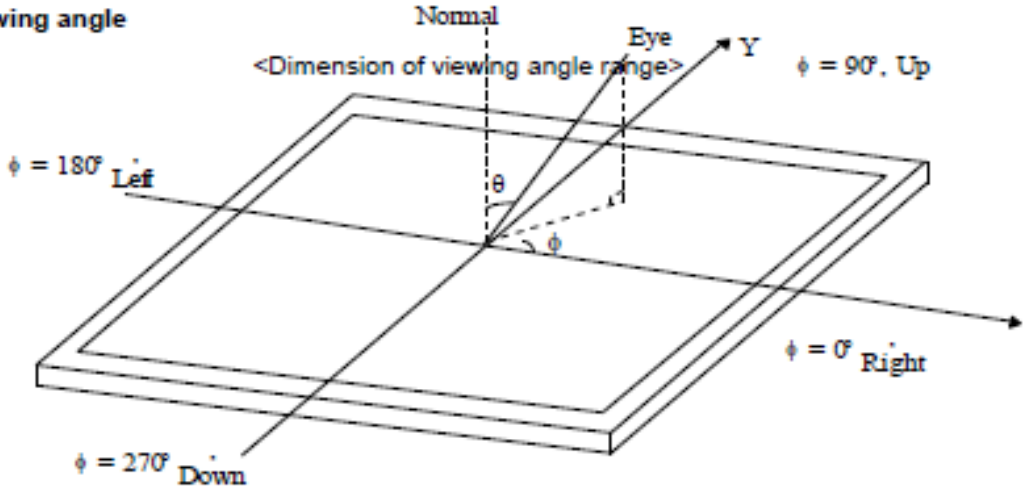

5. Mechanical Characteristics

The contents provide general mechanical characteristics for the model LP156WF4. In addition the figures in the next page are detailed mechanical drawing of the LCD.

Outline Dimension	Horizontal	359.5 ± 0.5mm
	Vertical	223.8 ± 0.5mm (with Bracket & PCB Board)
	Thickness	3.2mm (max.)
Bezel Area	Horizontal	347.6± 0.5mm
	Vertical	196.9± 0.5mm
Active Display Area	Horizontal	344.16±0.3mm
	Vertical	193.59± 0.3mm
Weight	350g (Max.) / 340g (Typ.)	
Surface Treatment	Glare treatment of the front polarizer	

<FRONT VIEW>

Note) Unit:[mm], General tolerance: ± 0.5mm

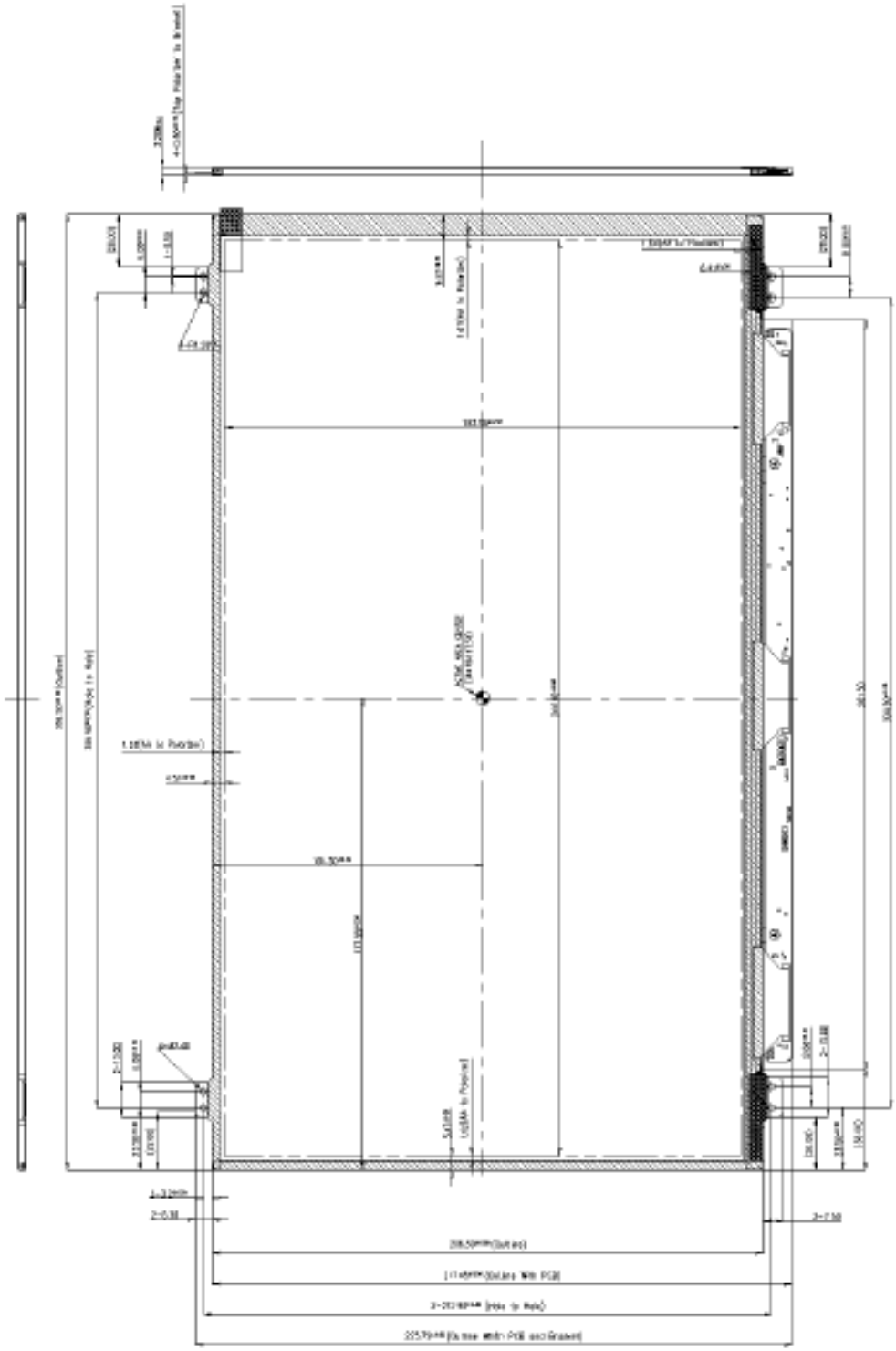

<REAR VIEW>

Note) Unit:[mm], General tolerance: ± 0.5mm