1. GENERAL DESCRIPTION

1.1 OVERVIEW

N156HGE-EB1 is a 15.6" TFT Liquid Crystal Display module with LED Backlight unit and 30 pins eDP interface. This module supports 1920 x 1080 FHD mode and can display 262,144 colors. The optimum viewing angle is at 6 o'clock direction.

1.2 GENERAL SPECIFICATIONS

Item	Specification	Unit	Note
Screen Size	15.6" diagonal		
Driver Element	a-si TFT active matrix	-	-
Pixel Number	1920 x R.G.B. x 1080	pixel	-
Pixel Pitch	0.17925 (H) x 0.17925 (V)	mm	-
Pixel Arrangement	RGB vertical stripe	-	-
Display Colors	262,144	color	-
Transmissive Mode	Normally white	-	-
Surface Treatment	Hard coating (3H), Glare	-	-
Luminance, White	350	Cd/m2	
Power Consumption	Total 6.315W (Max.) @ cell 1.55W (Max.), BL 4.765W (Max.)		(1)

Note (1) The specified power consumption (with converter efficiency) is under the conditions at VCCS = 3.3 V, fv = 60 Hz, LED_VCCS = Typ, fPWM = 200 Hz, Duty=100% and Ta = 25 ± 2 °C, whereas mosaic pattern is displayed.

2. MECHANICAL SPECIFICATIONS

Item		Min.	Typ.	Max.	Unit	Note
Module Size	Horizontal (H)	359	359.5	360	mm	(1)
	Vertical (V)	206	206.5	207	mm	
	Vertical (V) with PCB & Bracket	-	-	224.3	mm	
	Thickness (T)	-	3.05	3.2	mm	
Polarizer Area	Horizontal	347.06	347.36	347.66	mm	
	Vertical	196.39	196.59	196.79	mm	
Active Area	Horizontal	344.06	344.16	344.26	mm	
	Vertical	193.49	193.59	193.69	mm	
Weight		-	340	355	g	

Note (1) Please refer to the attached drawings for more information of front and back outline dimensions.

2.1 CONNECTOR TYPE

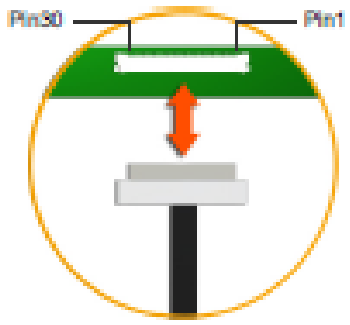

Connector Part No.: IPEX-20455-030E-12.

Please refer Appendix Outline Drawing for detail design.

User's connector Part No: IPEX-20453-030T-01.

3. ABSOLUTE MAXIMUM RATINGS

3.1 ABSOLUTE RATINGS OF ENVIRONMENT

Item	Symbol	Value		Unit	Note
		Min.	Max.		
Storage Temperature	T_{ST}	-20	+60	°C	(1)
Operating Ambient Temperature	T_{OP}	0	+50	°C	(1), (2)

Note (1) (a) 90 %RH Max. (Ta <= 40 °C).

(b) Wet-bulb temperature should be 39 °C Max. (Ta > 40 °C).

(c) No condensation.

Note (2) The temperature of panel surface should be 0 °C min. and 60 °C max.

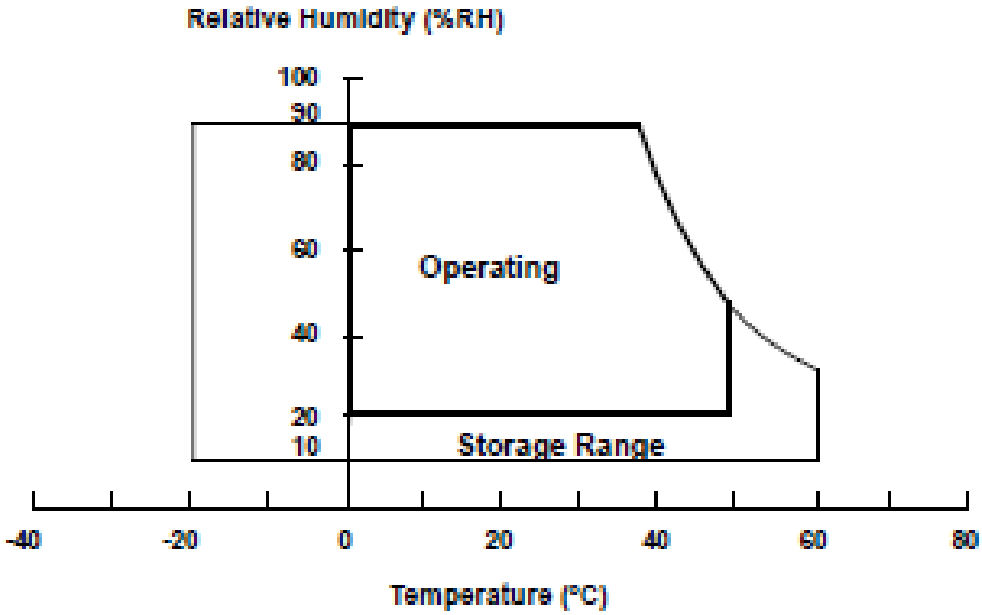

3.2 ELECTRICAL ABSOLUTE RATINGS

3.2.1 TFT LCD MODULE

Item	Symbol	Value		Unit	Note
		Min.	Max.		
Power Supply Voltage	VCCS	-0.3	+4.0	V	(1)
Logic Input Voltage	V_{IN}	-0.3	+4.0	V	
Converter Input Voltage	LED_VCCS	-0.3	24	V	(1)
Converter Control Signal Voltage	LED_PWM,	-0.3	5	V	(1)
Converter Control Signal Voltage	LED_EN	-0.3	5	V	(1)

Note (1) Stresses beyond those listed in above "ELECTRICAL ABSOLUTE RATINGS" may cause permanent damage to the device. Normal operation should be restricted to the conditions described in "ELECTRICAL CHARACTERISTICS".

4. ELECTRICAL SPECIFICATIONS

4.1 FUNCTION BLOCK DIAGRAM

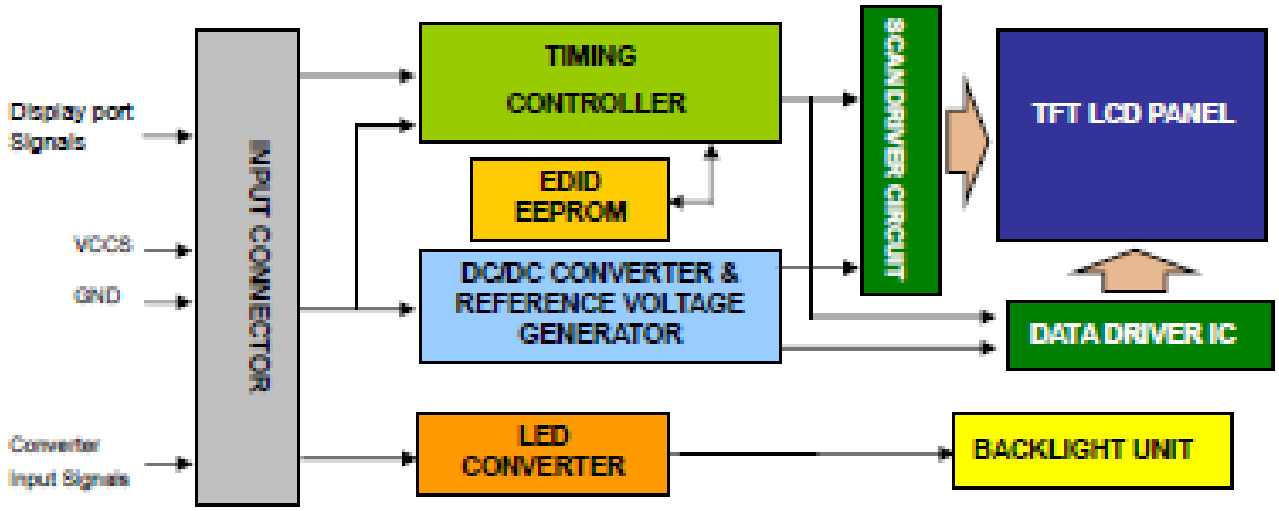

4.2. INTERFACE CONNECTIONS

PIN ASSIGNMENT

Pin	Symbol	Description	Remark
1	NC	No Connection (Reserved)	
2	H_GND	High Speed Ground	
3	ML1-	Complement Signal-Lane 1	
4	ML1+	True Signal-Main Lane 1	
5	H_GND	High Speed Ground	
6	ML0-	Complement Signal-Lane 0	
7	ML0+	True Signal-Main Lane 0	
8	H_GND	High Speed Ground	
9	AUX+	True Signal-Auxiliary Channel	
10	AUX-	Complement Signal-Auxiliary Channel	
11	H_GND	High Speed Ground	
12	VCCS	Power Supply +3.3 V (typical)	
13	VCCS	Power Supply +3.3 V (typical)	
14	NC	No Connection (Reserved fo[illegible]test)	
15	GND	Ground	
16	GND	Ground	
17	HPD	Hot Plug Detect	
18	BL_GND	BL Ground	
19	BL_GND	BL Ground	
20	BL_GND	BL Ground	
21	BL_GND	BL Ground	
22	LED_EN	BL_Enable Signal of LED Converter	
23	LED_PWM	PWM Dimming Control Signal of LED Converter	
24	NC	No Connection	
25	NC	No Connection	

26	LED_VCCS	BL Power	
27	LED_VCCS	BL Power	
28	LED_VCCS	BL Power	
29	LED_VCCS	BL Power	
30	NC	No Connection (Reserved)	

Note (1) The first pixel is odd as shown in the following figure.

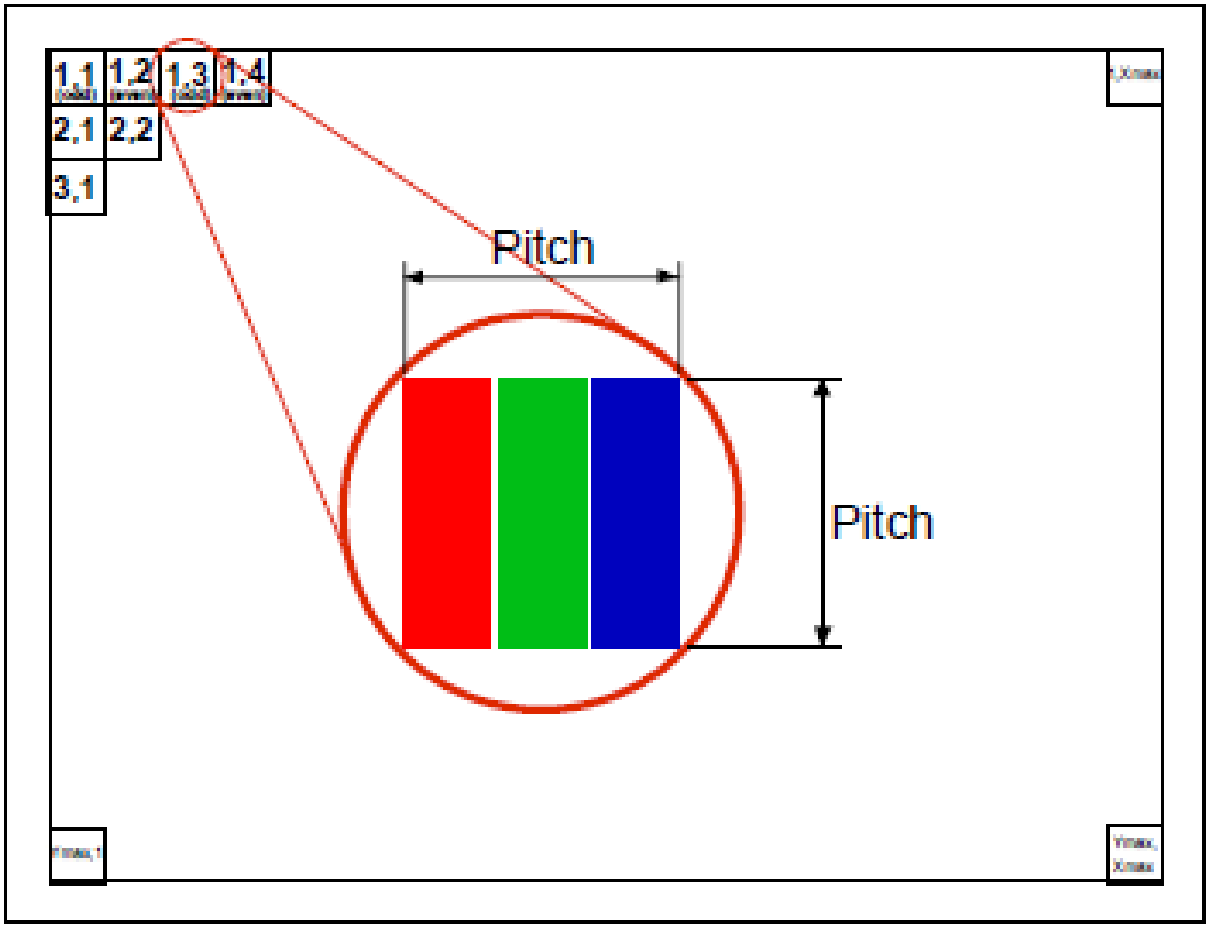

4.3 ELECTRICAL CHARACTERISTICS

4.3.1 LCD ELETRONICS SPECIFICATION

Parameter		Symbol	Value			Unit	Note
			Min.	Typ.	Max.		
Power Supply Voltage		VCCS	3.0	3.3	3.6	V	(1)-
HPD	High Level		2.25	-	2.75	V	
	Low Level		0	-	0.4	V	
Ripple Voltage		V_{RP}	-	50	-	mV	(1)-
Inrush Current		I_{RUSH}	-	-	1.5	A	(1),(2)
Power Supply Current	Mosaic	Icc	-	430	470	mA	(3)a
	Black		-	530	600	mA	

Note (1) The ambient temperature is Ta = 25 ± 2 ℃.

Note (2) I_{RUSH}: the maximum current when VCCS is rising

I_S: the maximum current of the first 100ms after power-on

Measurement Conditions: Shown as the following figure. Test pattern: black.

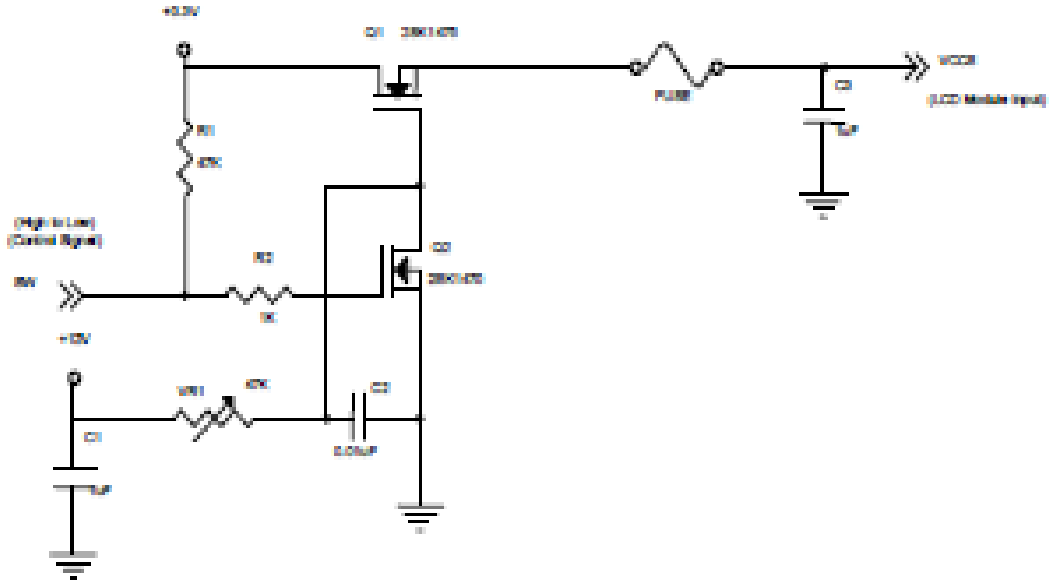

VCCS rising time is 0.5ms

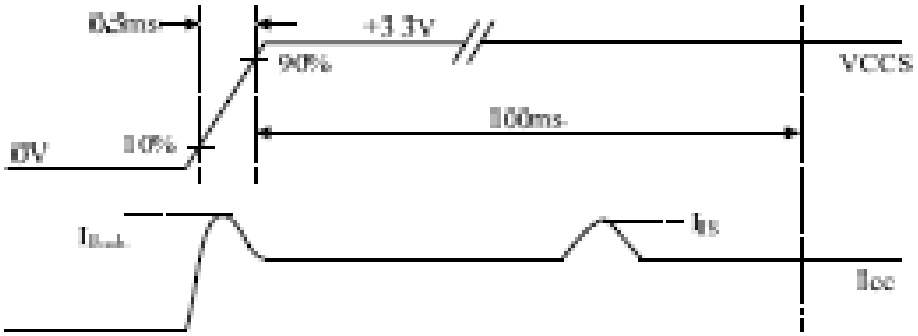

Note (3) The specified power supply current is under the conditions at VCCS = 3.3 V, Ta = 25 ± 2 °C, DC Current and f_v = 60 Hz, whereas a power dissipation check pattern below is displayed.

a. Mosaic Pattern

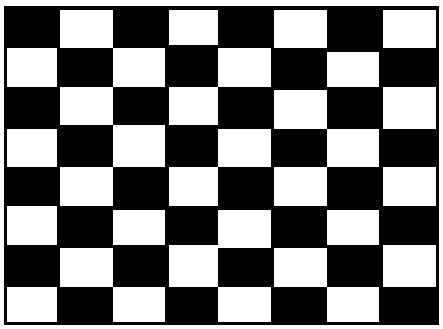

Active Area

4.3.2 LED CONVERTER SPECIFICATION

Parameter		Symbol	Value			Unit	Note
			Min.	Typ.	Max.		
Converter Input power supply voltage		LED_Vccs	6.0	12.0	21.0	V	
Converter Inrush Current		$ILED_{RUSH}$	-	-	1.5	A	(1)
EN Control Level	Backlight On		2.2	-	5	V	
	Backlight Off		0	-	0.6	V	
PWM Control Level	PWM High Level		2.2	-	5	V	
	PWM Low Level		0	-	0.6	V	
PWM Control Duty Ratio			5	-	100	%	
PWM Control Permissive Ripple Voltage		$VPWM_{RP}$	-	-	100	mV	
PWM Control Frequency		f_{PWM}	190	-	2K	Hz	(2)
LED Power Current	LED_VCCS =Typ.	ILED	322	360	397	mA	(3)

Note (1) $ILED_{RUSH}$: the maximum current when LED_VCCS is rising,

$ILED_{IS}$: the maximum current of the first 100ms after power-on,

Measurement Conditions: Shown as the following figure. LED_VCCS = Typ, Ta = 25 ± 2 °C, f_{PWM} = 200 Hz, Duty=100%.

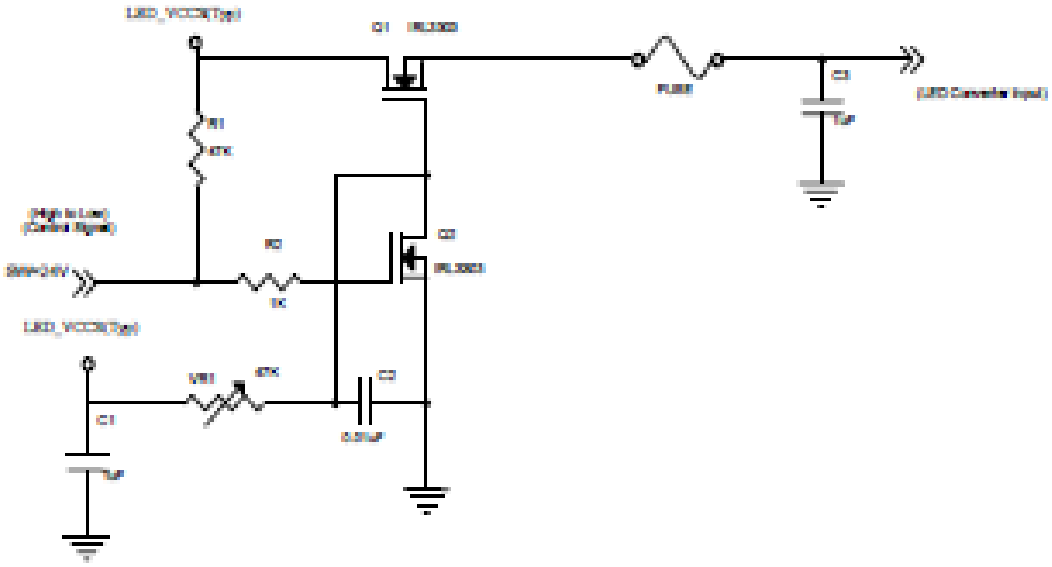

VLED rising time is 0.5ms

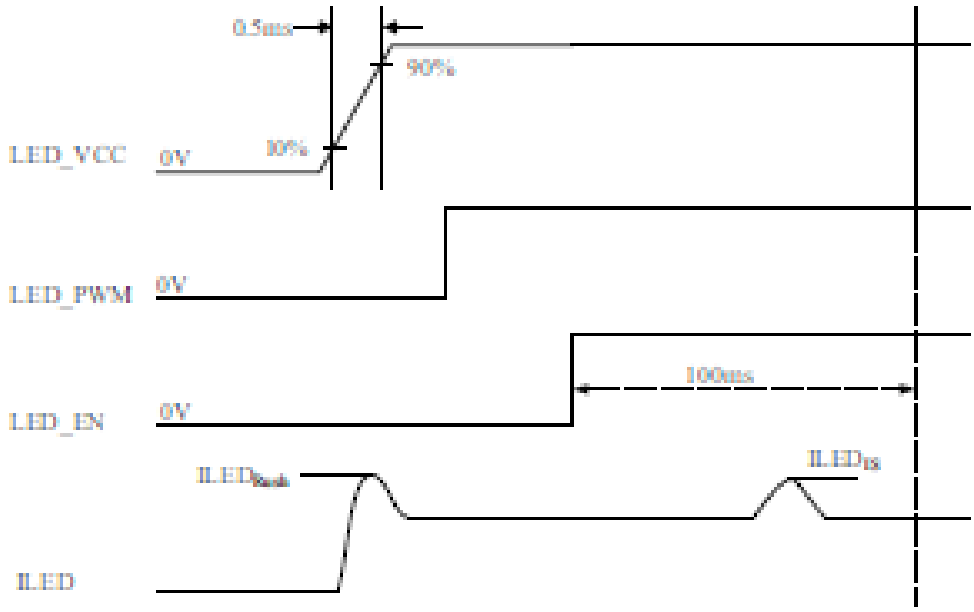

Note (2) If PWM control frequency is applied in the range less than 1KHz, the "waterfall" phenomenon on the screen may be found. To avoid the issue, it's a suggestion that PWM control frequency should follow the criterion as below.

PWM control frequency f_{PWM} should be in the range

$$(N + 0.33) * f \leq f_{PWM} \leq (N + 0.66) * f$$

N : Integer $(N \geq 3)$

f : Frame rate

Note (3) The specified LED power supply current is under the conditions at "LED_VCCS = Typ.", Ta = 25 ± 2 °C, f_{PWM} = 200 Hz, Duty=100%.

4.3.3 BACKLIGHT UNIT

Ta = 25 ± 2 °C

Parameter	Symbol	Value			Unit	Note
		Min.	Typ.	Max.		
LED Light Bar Power Supply Voltage	V_L	26	29	30	V	(1)(2)(Duty100%)
LED Light Bar Power Supply Current	I_L	-	135	-	mA	
Power Consumption	P_L	-	3.915	4.050	W	(3)
LED Life Time	L_{BL}	15000	-	-	Hrs	(4)

Note (1) LED current is measured by utilizing a high frequency current meter as shown below :

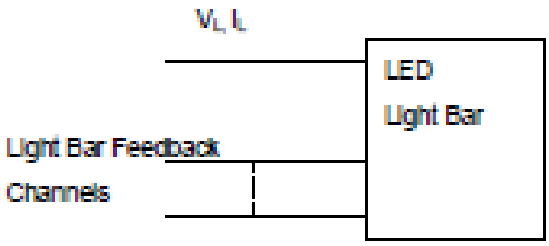

Note (2) For better LED light bar driving quality, it is recommended to utilize the adaptive boost converter with current balancing function to drive LED light-bar.

Note (3) $P_L = I_L \times V_L$ (Without LED converter transfer efficiency)

Note (4) The lifetime of LED is defined as the time when it continues to operate under the conditions at Ta = 25 ±2 °C and I_L = 22.5 mA (Per EA) until the brightness becomes $\leq$ 50% of its original value.

4.4 DISPLAY PORT SIGNAL TIMING SPECIFICATION

4.4.1 DISPLAY PORT INTERFACE

Parameter	Symbol	Min.	Typ.	Max.	Unit	Notes
Differential Signal Common Mode Voltage(MainLink and AUX)	VCM	0		2	V	(1)(3)
AUX AC Coupling Capacitor	C_{AUX}	75		200	nF	(2)

Note (1)Display port interface related AC coupled signals should follow VESA DisplayPort Standard Version1. Revision 1a and VESA Embedded DisplayPort™ Standard Version 1.2. There are many optional items described in eDP1.2. If some optional item is requested, please contact us.

(2)The AUX AC Coupling Capacitor should be placed on Source Devices.

(3)The source device should pass the test criteria described in DisplayPortCompliance Test Specification (CTS) 1.1

Single Ended

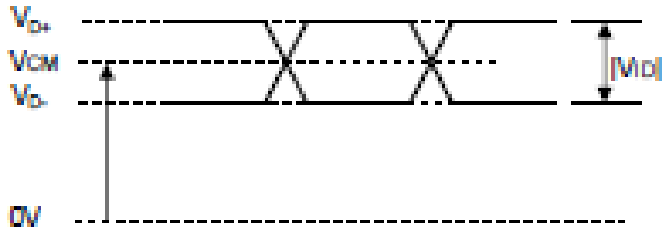

4.4.2 COLOR DATA INPUT ASSIGNMENT

The brightness of each primary color (red, green and blue) is based on the 6-bit gray scale data input for the color. The higher the binary input the brighter the color. The table below provides the assignment of color versus data input.

Color		Data Signal																	
		Red						Green						Blue					
		R5	R4	R3	R2	R1	R0	G5	G4	G3	G2	G1	G0	B5	B4	B3	B2	B1	B0
Basic Colors	Black	0	0	0	0	0	0	0	0	0	0	0	0	0	0	0	0	0	0
	Red	1	1	1	1	1	1	0	0	0	0	0	0	0	0	0	0	0	0
	Green	0	0	0	0	0	0	1	1	1	1	1	1	0	0	0	0	0	0
	Blue	0	0	0	0	0	0	0	0	0	0	0	0	1	1	1	1	1	1
	Cyan	0	0	0	0	0	0	1	1	1	1	1	1	1	1	1	1	1	1
	Magenta	1	1	1	1	1	1	0	0	0	0	0	0	1	1	1	1	1	1
	Yellow	1	1	1	1	1	1	1	1	1	1	1	1	0	0	0	0	0	0
	White	1	1	1	1	1	1	1	1	1	1	1	1	1	1	1	1	1	1
Gray Scale Of Red	Red(0)/Dark	0	0	0	0	0	0	0	0	0	0	0	0	0	0	0	0	0	0
	Red(1)	0	0	0	0	0	1	0	0	0	0	0	0	0	0	0	0	0	0
	Red(2)	0	0	0	0	1	0	0	0	0	0	0	0	0	0	0	0	0	0
	:	:	:	:	:	:	:	:	:	:	:	:	:	:	:	:	:	:	:
	:	:	:	:	:	:	:	:	:	:	:	:	:	:	:	:	:	:	:
	Red(61)	1	1	1	1	0	1	0	0	0	0	0	0	0	0	0	0	0	0
	Red(62)	1	1	1	1	1	0	0	0	0	0	0	0	0	0	0	0	0	0
	Red(63)	1	1	1	1	1	1	0	0	0	0	0	0	0	0	0	0	0	0
Gray Scale Of Green	Green(0)/Dark	0	0	0	0	0	0	0	0	0	0	0	0	0	0	0	0	0	0
	Green(1)	0	0	0	0	0	0	0	0	0	0	0	1	0	0	0	0	0	0
	Green(2)	0	0	0	0	0	0	0	0	0	0	1	0	0	0	0	0	0	0
	:	:	:	:	:	:	:	:	:	:	:	:	:	:	:	:	:	:	:
	:	:	:	:	:	:	:	:	:	:	:	:	:	:	:	:	:	:	:
	Green(61)	0	0	0	0	0	0	1	1	1	1	0	1	0	0	0	0	0	0
	Green(62)	0	0	0	0	0	0	1	1	1	1	1	0	0	0	0	0	0	0
	Green(63)	0	0	0	0	0	0	1	1	1	1	1	1	0	0	0	0	0	0
Gray Scale Of Blue	Blue(0)/Dark	0	0	0	0	0	0	0	0	0	0	0	0	0	0	0	0	0	0
	Blue(1)	0	0	0	0	0	0	0	0	0	0	0	0	0	0	0	0	0	1
	Blue(2)	0	0	0	0	0	0	0	0	0	0	0	0	0	0	0	0	1	0
	:	:	:	:	:	:	:	:	:	:	:	:	:	:	:	:	:	:	:
	:	:	:	:	:	:	:	:	:	:	:	:	:	:	:	:	:	:	:
	Blue(61)	0	0	0	0	0	0	0	0	0	0	0	0	1	1	1	1	0	1
	Blue(62)	0	0	0	0	0	0	0	0	0	0	0	0	1	1	1	1	1	0
	Blue(63)	0	0	0	0	0	0	0	0	0	0	0	0	1	1	1	1	1	1

Note (1) 0: Low Level Voltage, 1: High Level Voltage

4.5 DISPLAY TIMING SPECIFICATIONS

The input signal timing specifications are shown as the following table and timing diagram.

Refresh rate 60Hz

Signal	Item	Symbol	Min.	Typ.	Max.	Unit	Note
DCLK	Frequency	1/Tc	72.0	75.8	79.6	MHz	-
DE	Vertical Total Time	TV	1100	1138	1152	TH	-
	Vertical Active Display Period	TVD	1080	1080	1080	TH	-
	Vertical Active Blanking Period	TVB	TV-TVD	58	TV-TVD	TH	-
	Horizontal Total Time	TH	2212	2220	2295	Tc	-
	Horizontal Active Display Period	THD	1920	1920	1920	Tc	-
	Horizontal Active Blanking Period	THB	TH-THD	300	TH-THD	Tc	-

INPUT SIGNAL TIMING DIAGRAM

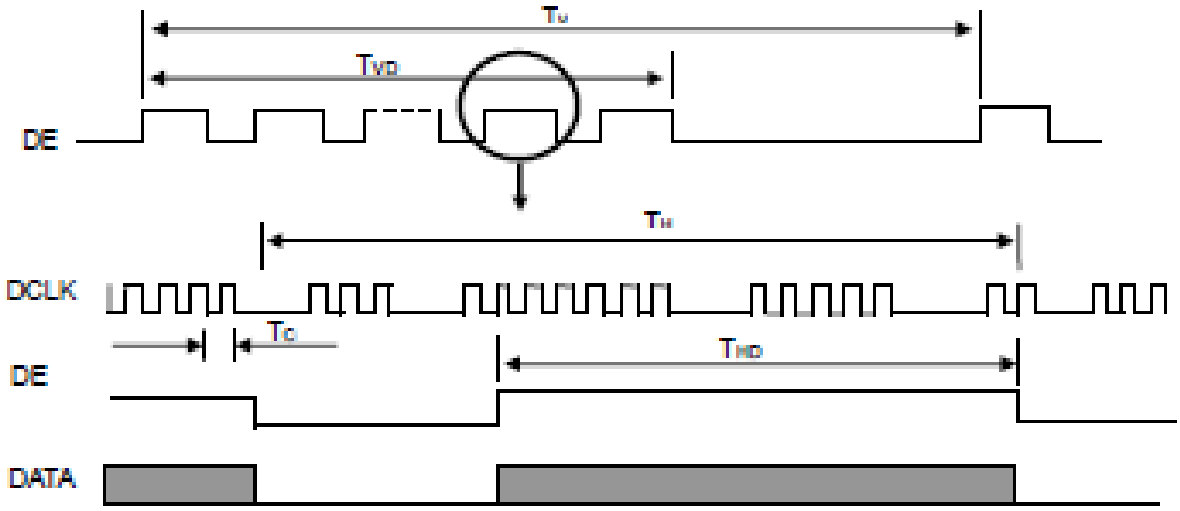

4.6 POWER ON/OFF SEQUENCE

The power sequence specifications are shown as the following table and diagram.

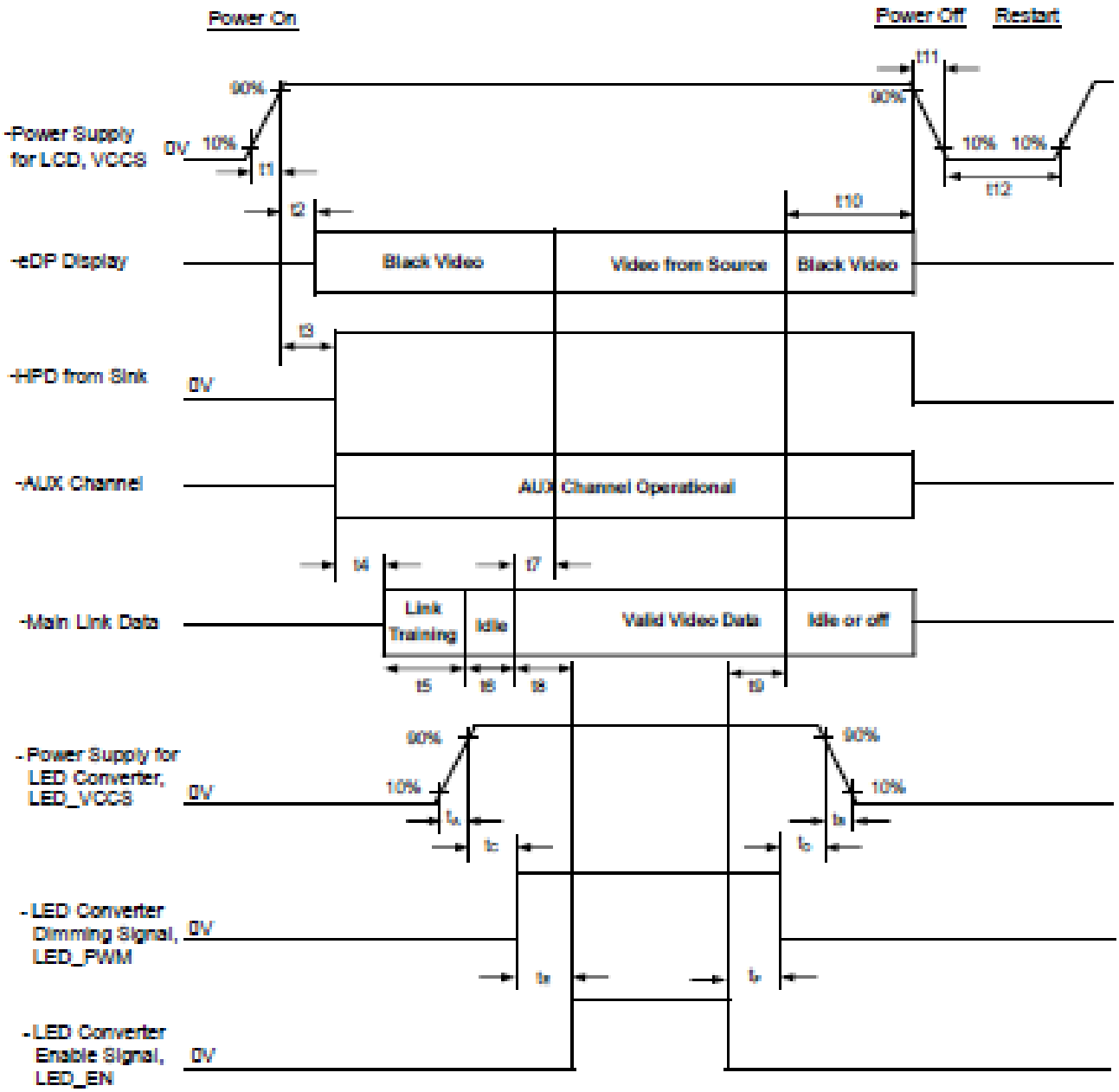

Timing Specifications:

Parameter	Description	Reqd. By	Value		Unit	Notes
			Min	Max		
t1	Power rail rise time, 10% to 90%	Source	0.5	10	ms	-
t2	Delay from LCD,VCCS to black video generation	Sink	0	200	ms	Automatic Black Video generation prevents display noise until valid video data is received from the Source (see Notes:2 and 3 below)
t3	Delay from LCD,VCCS to HPD high	Sink	0	200	ms	Sink AUX Channel must be operational upon HPD high (see Note:4 below)
t4	Delay from HPD high to link training initialization	Source	-	-	ms	Allows for Source to read Link capability and initialize
t5	Link training duration	Source	-	-	ms	Dependant on Source link training protocol
t6	Link Idle	Source	-	-	ms	Min Accounts for required BS-Idle pattern. Max allows for Source frame synchronization
t7	Delay from valid video data from Source to video on display	Sink	0	50	ms	Max value allows for Sink to validate video data and timing. At the end of T7, Sink will indicate the detection of valid video data by setting the SINK_STATUS bit to logic 1 (DPCD 00205h, bit 0), and Sink will no longer generate automatic Black Video
t8	Delay from valid video data from Source to backlight on	Source	-	-	ms	Source must assure display video is stable
t9	Delay from backlight off to end of valid video data	Source	-	-	ms	Source must assure backlight is no longer illuminated. At the end of T9, Sink will indicate the detection of no valid video data by setting the SINK_STATUS bit to logic 0 (DPCD 00205h, bit 0), and Sink will automatically display Black Video. (See Notes: 2 and 3 below)
t10	Delay from end of valid video data from Source to power off	Source	0	500	ms	Black video will be displayed after receiving idle or off signals from Source
t11	VCCS power rail fall time, 90% to 10%	Source	0.5	10	ms	-
t12	VCCS Power off time	Source	500	-	ms	-
t_4	LED power rail rise time, 10% to 90%	Source	0.5	10	ms	-

t_a	LED power rail fall time, 90% to 10%	Source	0	10	ms	-
t_c	Delay from LED power rising to LED dimming signal	Source	1	-	ms	-
t_b	Delay from LED dimming signal to LED power falling	Source	1	-	ms	-
t_d	Delay from LED dimming signal to LED enable signal	Source	1	-	ms	-
t_e	Delay from LED enable signal to LED dimming signal	Source	1	-	ms	-

Note (1) Please don't plug or unplug the interface cable when system is turned on.

Note (2) The Sink must include the ability to automatically generate Black Video autonomously. The Sink must automatically enable Black Video under the following conditions:

- Upon LCDVCC power-on (within T2 max)
- When the "NoVideoStream_Flag" (VB-ID Bit 3) is received from the Source (at the end of T9)

Note (3) The Sink may implement the ability to disable the automatic Black Video function, as described in Note (2), above, for system development and debugging purposes.

Note (4) The Sink must support AUX Channel polling by the Source immediately following LCDVCC power-on without causing damage to the Sink device (the Source can re-try if the Sink is not ready). The Sink must be able to response to an AUX Channel transaction with the time specified within T3 max.

5. OPTICAL CHARACTERISTICS

5.1 TEST CONDITIONS

Item	Symbol	Value	Unit
Ambient Temperature	Ta	25±2	°C
Ambient Humidity	Ha	50±10	%RH
Supply Voltage	V_{CC}	3.3	V
Input Signal	According to typical value in "3. ELECTRICAL CHARACTERISTICS"		
LED Light Bar Input Current	I_L	135	mA

The measurement methods of optical characteristics are shown in Section 5.2. The following items should be measured under the test conditions described in Section 5.1 and stable environment shown in Note (5).

5.2 OPTICAL SPECIFICATIONS

Item		Symbol	Condition	Min.	Typ.	Max.	Unit	Note
Contrast Ratio		CR	$\theta_X=0°$, $\theta_Y=0°$ Viewing Normal Angle	500	600	-	-	(2), (5), (7)
Response Time		T_R		-	3	8	ms	(3), (7)
		T_F		-	8	13	ms	
Average Luminance of White		L_{AVE}		260	350	-	cd/m²	(4), (6), (7)
Color Chromaticity	Red	Rx		Typ – 0.03	0.618	Typ + 0.03	-	Color Chromaticity
		Ry			0.340		-	
	Green	Gx			0.341		-	
		Gy			0.580		-	
	Blue	Bx			0.152		-	
		By			0.081		-	
	White	Wx			0.313		-	
		Wy			0.329		-	
Viewing Angle	Horizontal	θ_X+	CR≥10	40	45	-	Deg.	Viewing Angle
		θ_X-		40	45	-		
	Vertical	θ_Y+		15	20	-		
		θ_Y-		40	45	-		
White Variation of 5 Points		δW_{5p}	$\theta_X=0°$, $\theta_Y=0°$	80	-	-	%	(5),(6), (7)

Note (1) Definition of Viewing Angle (θx, θy):

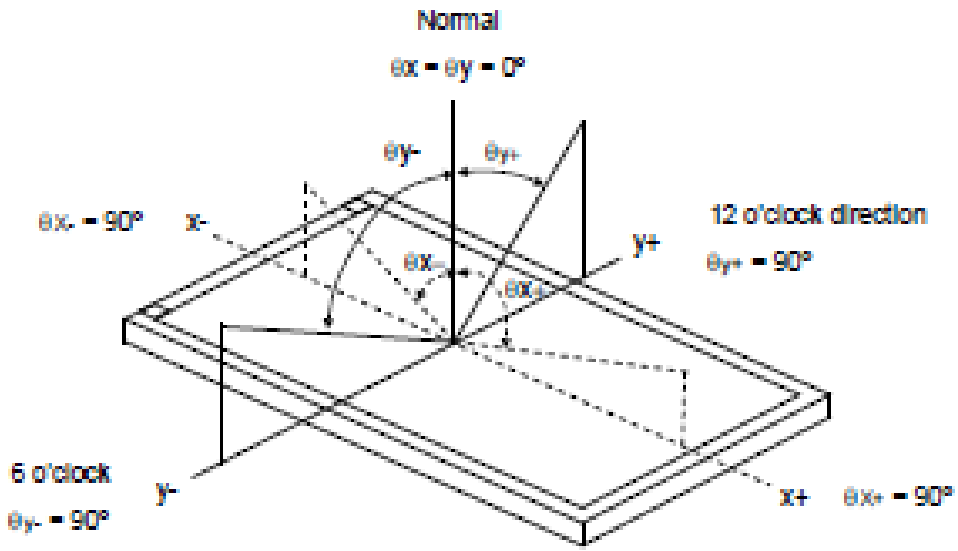

Note (2) Definition of Contrast Ratio (CR):

The contrast ratio can be calculated by the following expression.

Contrast Ratio (CR) = L63 / L0

L63: Luminance of gray level 63

L 0: Luminance of gray level 0

CR = CR (1)

CR (X) is corresponding to the Contrast Ratio of the point X at Figure in Note (6).

Note (3) Definition of Response Time (T_R, T_F):

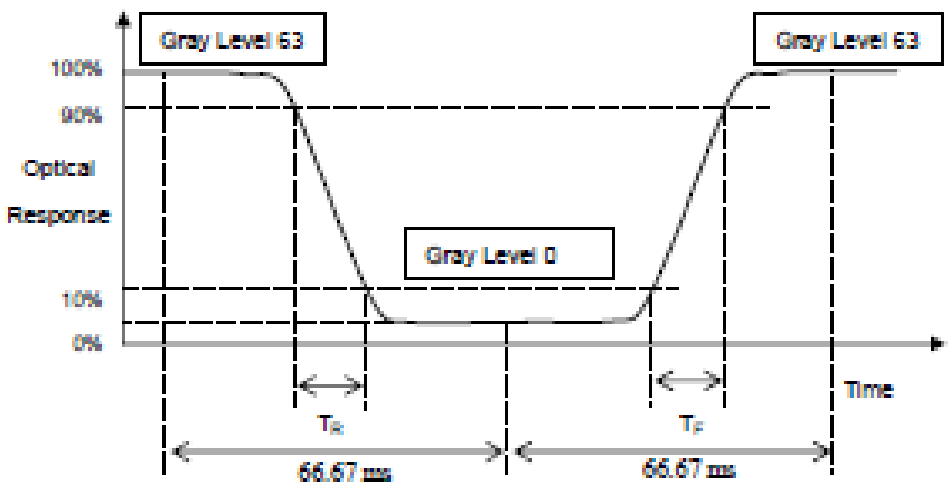

Note (4) Definition of Average Luminance of White (L_{AVE}):

Measure the luminance of gray level 63 at 5 points

L_{AVE} = [L (1)+ L (2)+ L (3)+ L (4)+ L (5)] / 5

L (x) is corresponding to the luminance of the point X at Figure in Note (6)

Note (5) Measurement Setup:

The LCD module should be stabilized at given temperature for 20 minutes to avoid abrupt temperature change during measuring. In order to stabilize the luminance, the measurement should be executed after lighting Backlight for 20 minutes in a windless room.

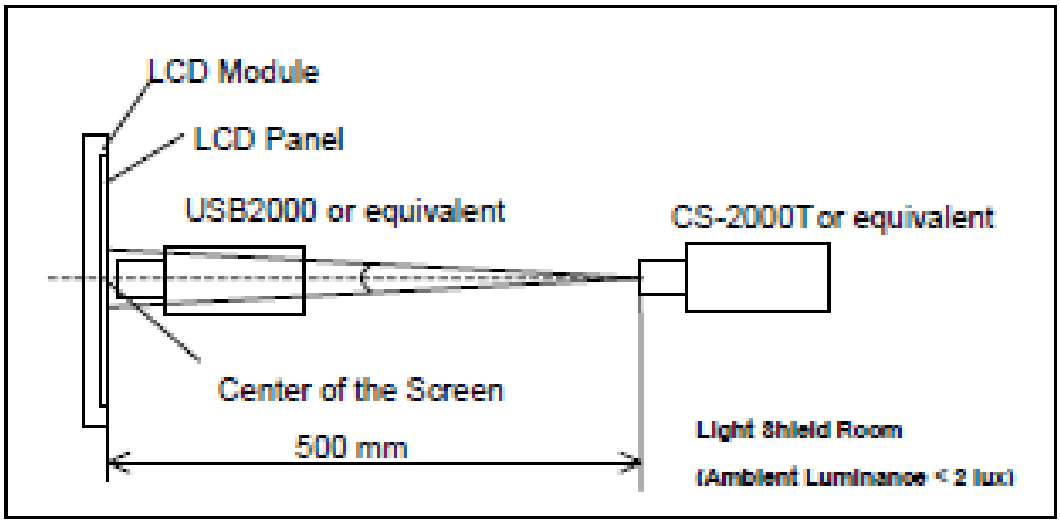

Note (6) Definition of White Variation (δW):

Measure the luminance of gray level 63 at 5 points

δW_{5p} = [Minimum [L (1) ~ L (5)] / Maximum [L (1) ~ L (5)]]*100%

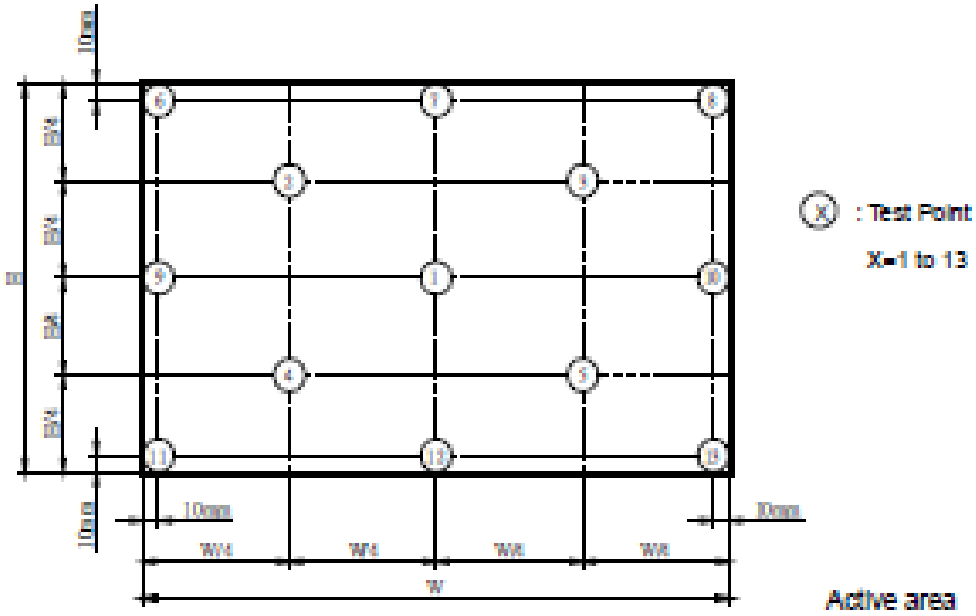

Note (7) The listed optical specifications refer to the initial value of manufacture, but the condition of the specifications after long-term operation will not be warranted.

6. RELIABILITY TEST ITEM

Test Item	Test Condition	Note
High Temperature Storage Test	60℃, 240 hours	(1) (2)
Low Temperature Storage Test	-20℃, 240 hours	
Thermal Shock Storage Test	-20℃, 0.5hour←→60℃, 0.5hour; 100cycles, 1hour/cycle	
High Temperature Operation Test	50℃, 240 hours	
Low Temperature Operation Test	0℃, 240 hours	
High Temperature & High Humidity Operation Test	50℃, RH 80%, 240hours	
ESD Test (Operation)	150pF, 330Ω, 1sec/cycle Condition 1 : Contact Discharge, ±8KV Condition 2 : Air Discharge, ±15KV	(1)
Shock (Non-Operating)	220G, 2ms, half sine wave,1 time for each direction of ±X,±Y,±Z	(1)(3)
Vibration (Non-Operating)	1.5G / 10-500 Hz, Sine wave, 30 min/cycle, 1cycle for each X, Y, Z	(1)(3)

Note (1) criteria: Normal display Image with no obvious non-uniformity and no line defect.

Note (2) Evaluation should be tested after storage at room temperature for more than two hour

Note (3) At testing Vibration and Shock, the fixture in holding the module has to be hard and rigid enough so that the module would not be twisted or bent by the fixture.