Specification For Approval

( ) Preliminary Specification
(♦) Final Specification

Model Name	NP283FD (IF283DBN1A)
Description	2.83” Liquid Crystal Display Module

Proposed by NeoDis		Approval
APPROVED BY	SIGNATURE	
K. H. IN		
CHECKED BY	SIGNATURE	
C. I. LEE		
DESIGNED BY	SIGNATURE	
S.H.JUNG J. K. LEE		

Ver 1.4 DEC. 21. 2004.

13. LCD Module Outline Dimensions

< Record of Revision >

Version	Date	Page	Content
1.0	JUNE/04/2004		FIRST RELEASE
1.1	JULY/29/2004	5,10, 15	SOME ITEMS ADDED
1.2	SEP/20/2004	4	ERROR CORRECTION (VIEWING ANGLE)
		25	BAR CODE MARKING
1.3	DEC/09/2004	23	CHANGING THE DRAWING
		25	CHANGING LOT MARKING METHEOD
		26	CHANGING BAR CODE MARKING METHOD
1.4	DEC/14/2004	6	CHANGING THE NOTE
		11	BAGGINESS SPEC ADDED
		23	CHANGING THE DRAWING

CONTENTS

NO	ITEM	PAGE
-	COVER SHEET	1
-	RECORD OF REVISIONS	2
-	CONTENTS	3
1	GENERAL DESCRIPTION	4
2	MECHANICAL DESCRIPTION	4
3	ABSOLUTE MAXIMUM RATINGS	5
4	OPTICAL CHARACTERISTICS	6
5	ELECTRICAL CHARACTERISTICS	10
6	TOUCH SCREEN PANEL SPECIFICATION	11
7	BLOCK DIAGRAM	12
8	INPUT TERMINAL PIN ASSIGNMENT	13
9	INPUT SIGNAL TIMING	15
10	POWER SEQUENCE	18
11	FPC	19
12	RELIABILITY TEST	22
13	LCD MODULE OUTLINE DIMENSION	23
14	PACKING FORM & DESIGNATION OF LOT MARK & BAR CODE MARKING	24
15	GENERAL PRECAOUTIONS	28

1. General Description

1.1 Description

NP283FD is a transflective type color active matrix TFT (Thin Film Transistor) liquid crystal display (LCD) that uses amorphous silicon TFT as a switching devices. This model is composed of a TFT-LCD module(TFT-LCD panel, driver ICs and FPC), a Touch screen panel, and a Back-light unit.

The resolution of a 2.83" contains 240×320 pixels and can display up to 262,144 colors

1.2 Features

- Display mode : Transflective TN (Twisted Nematic) mode 262K colors
- LCD Driver : HD66783×1 (Gate), HD66779×2 (Source)
- Interface : 18 bit RGB(DE mode) interface
- Touch Panel : Resistive -4wire
- Low power consumption driving (Line Inversion)
- Applications : PDA, Mobile Application

1.3 General Information

Properties	Spec.	Unit
Active Screen Size	43.2 X 57.6	mm
Color Depth	262K	Color
Resolution	240(H) X RGB X 320(V)	Dots
Pixel Format	RGB Vertical Stripe	
Pixel Size	0.18 (H) X 0.18 (V)	mm
Display Operating Mode	Normally White	
Viewing Angle	6	o'clock

2. Mechanical Description

Properties		Outside dimensions	Unit
Module size	Horizontal	52.9 ± 0.2	mm
	Vertical	71.7 ± 0.2	mm
	Thickness	Max. 4.75 (include Touch Panel)	mm
Weight		Typ 32.5	g

3. Absolute Maximum Ratings

3.1 Absolute Ratings of Environment

Properties	Symbol	Min	Max	Unit	Note
Storage Temperature	Tstg	-30	70	℃	(1),(2)
Operating Ambient Temperature	Topr	-20	60	℃	(1),(2)
Power supply voltage	Vcc	-0.3	4.3	V	(3),(4)
Logic signal input voltage	Vt	-0.3	Vcc + 0.3	V	(3)
Storage Temperature	Tstg	-30	70	℃	(1),(2)
Operating Ambient Temperature	Topr	-20	60	℃	(1),(2)

Note (1) In case of below 0℃, the response time of liquid crystal (LC) becomes slower and the color of panel becomes darker than normal one.
Level of retardation depends on temperature, because of LC's characteristics.

(2) If product is exposed to high temperatures for extended time, there is a possibility of the polarizer film damage which could degrade the optical characteristics.

(3) If the LSI is used above these absolute maximum ratings, it may become permanently damaged. Using the LSI within the following electrical characteristic limit(10/27p) is strongly recommended for normal operation. If these electrical characteristic conditions are also exceeded, the LSI will malfunction. And cause poor reliability.

(4) Vcc>=GND must be maintained.

3.2 Back-Light Unit

Properties	Symbol	Min	Max	Unit	Note
current	-	-	25	mA	(1)

Note (1) Permanent damage to the device may occur if maximum values are exceeded or reverse voltage is loaded
Functional operation should be restricted to the conditions described under normal operating conditions.

4. Optical Characteristics

Fig. 1 presents additional information concerning the measurement equipment and method
- Optical Characteristic Measurement Equipment : PR705. LCD7000

Ta = 25 ±5℃

Parameter		Symbol	Condition	Min	Typ	Max	Units	Notes
Reflectance		Vf	B/L Off	6	8	-	%	1
Luminance of white		L_{WH}	B/L On	100	140	-	cd/m^2	1
Contrast Ratio		CR	B/L On	100	150	-	-	1, 2
			B/L Off	3	-	-	-	1, 2
Uniformity of luminance		-	B/L On	75	80	-	%	1
Response Time	Rising + Falling	Tr	-	-	40	-	ms	3
CIE color coordinates	White	Wx	B/L On	0.268	0.298	0.328	-	-
		Wy	B/L On	0.304	0.334	0.364		
	Red	Rx	B/L On	0.513	0.543	0.573		
		Ry	B/L On	0.298	0.328	0.358		
	Green	Gx	B/L On	0.296	0.326	0.356		
		Gy	B/L On	0.518	0.548	0.578		
	Blue	Bx	B/L On	0.121	0.151	0.181		
		By	B/L On	0.125	0.155	0.185		
Viewing Angle (CR > 5)	X axis right (ϕ=0°)	θx	B/L On	-	30	-	degree	4
	X axis left (ϕ=180°)	θx	B/L On	-	30	-		
	Y axis up (ϕ=90°)	θy	B/L On	-	30	-		
	Y axis down (ϕ=270°)	θy	B/L On	-	60	-		

Note1. White Brightness Definition (Y_{WH}) :

- Measurement of the center point across the LCD surface 50cm from the surface with all pixels displaying white (Y_{WH}).
- after being left as it is for 30 minutes, panel should be measured at a maximum rating with its backlight on for another 10 minutes.
- ambient condition : room temperature: 25℃
- Under the condition of back light LED current 20mA, (Serial 6EA)

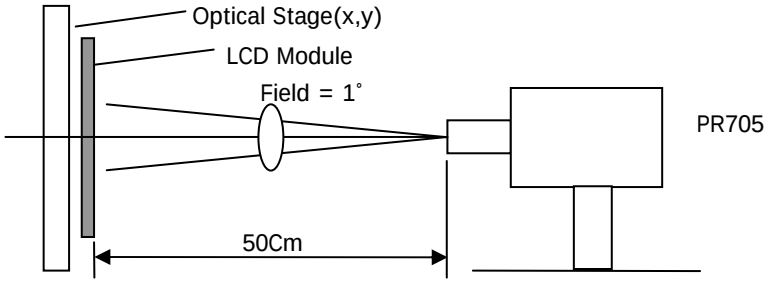

Fig. 1 Test Equipment Setup for the Transmissive Mode (Back-light ON)

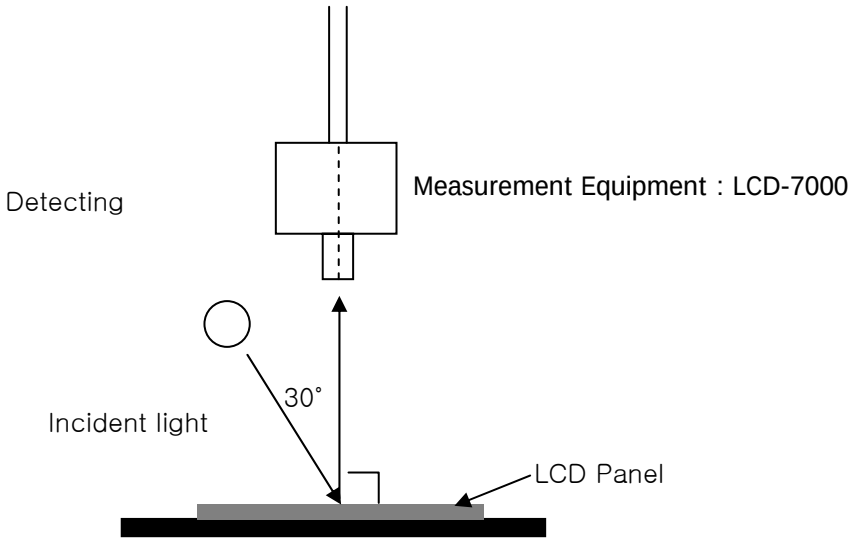

Fig. 1-1 Test Equipment Setup for the Reflective Mode (Back-light OFF)

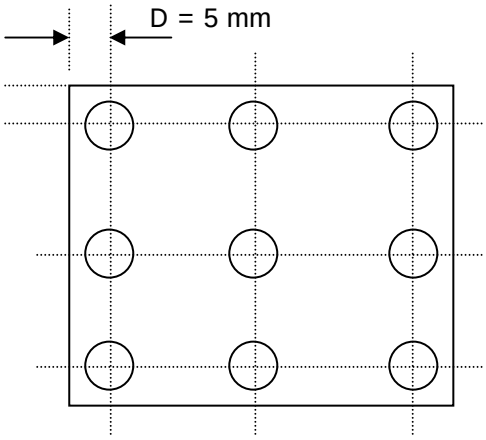

[Measurement point for luminance uniformity]

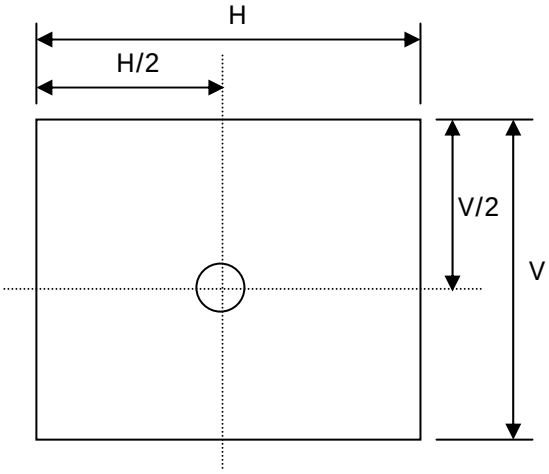

[Measuring point for surface luminance]

Fig. 2 Luminance

Note 2. Contrast Ratio (CR) is defined mathematically as

$$\text{Contrast Ratio} = \frac{\text{Surface Luminance with all white pixels}}{\text{Surface Luminance with all black pixels}}$$

Note 3. Definition of Response time

The response time is defined as the following figure and shall be measured by switching the input signal for “black” and “white”.

Response Time (Tr) = Rising Time + Falling Time

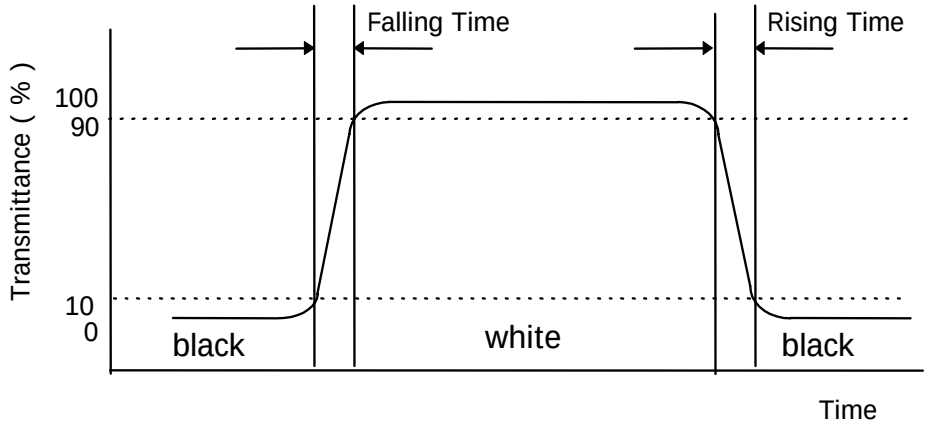

Note 4. Definition of Viewing angle

The definition of viewing angle range is that the contrast ratio is higher than CR 5.(CR>5)

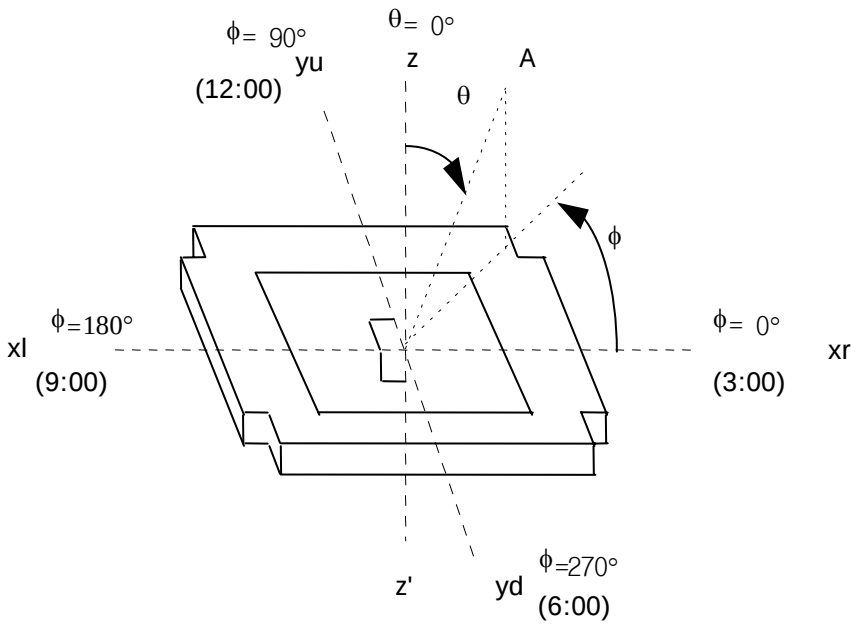

5. Electrical Characteristics

Ta = 25 ±5℃

Characteristics		Symbol	Min	Typ.	Max	Unit	Note
Power supply voltage		VCC	3.2	3.3	3.4	V	
Logic signal input Voltage		VIdL	0	-	$0.15*V_{CC}$	V	
		VIdH	$0.7*V_{CC}$	-	V_{CC}	V	
Logic signal output Voltage		VOdL	0	-	$0.15*V_{CC}$	V	
		VOdH	$0.7*V_{CC}$	-	V_{CC}	V	
Power Consumption	White	Pw	-	40	45	mW	2)
	Black	P_b	-	50	55	mW	2)
	Vertical Stripe	P_v	-	47	52	mW	1), 2)
Power supply current	White	Pw	-	12	14	mA	2)
	Black	P_b	-	15	17	mA	2)
	Vertical Stripe	P_v	-	14	16	mA	1), 2)

Note 1) Display Pattern

Note 2) operating by 8MHz

1. White
2. Yellow
3. Light blue
4. Green
5. Purple
6. Red
7. Blue
8. Black

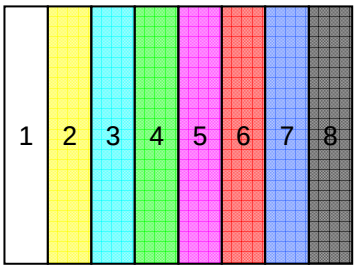

5.1 Back light Unit

: Back light system is an edge-lighting type with 6 white LED's serial type.

Ta = 25 ±5℃

Items	Symbol	Unit	Min	Typ	Max	Remark
LED forward current	I_f	mA	-	20	25	
LED forward voltage	V_f	V	-	20	20	
Operating Life	-	Hours	10,000	-	-	20mA LED current

6. Touch Screen Panel Specifications

6-1. Electrical Characteristics

Characteristics	Min	Typ.	Max	Unit	Note
Linearity	-1.5	-	1.5	%	
Terminal resistance	200	350	900	Ω	X (Film side)
	200	550	900	Ω	Y (Film side)
Insulation resistance	20	-	-	MΩ	25V
Voltage	-	5	7	V	DC
Chattering	-	-	10	ms	100kΩ pull -up
Transparency	80	83	-	%	-

Caution : Do not operate it with a thing except a polyacetal pen (tip R0.8mm or less) or a finger, especially those with hard or sharp tips such as a ball point pen or a mechanical pencil.

6-2. Mechanical & Reliability Characteristics

Characteristics	Min	Typ.	Max	Unit	Note
Activation force	-	-	80	g	(1)
Writing friction	150,000	-	-	characters	(2)
Durability-surface pitting	1,000,000	-	-	touches	(3)
Flexible tail peeling strength	400	-	-	g/cm	(4)
Bagginess	-	-	0.4	mm	
Surface hardness	3	-	-	H	JIS-K5400

Note (1) Input with stylus : 80g or less (R0.8 Polyacetal stylus)

Input with finger : 80g or less (R8.0 Hs40 silicon rubber)

(2) Measurement area : 20mm × 20mm

stylus condition : 0.8R Polyacetal stylus

Loads: 250gf

speed : 60mm/sec

(3) Each touch by R8.0mm Stylus, 250gf load & 2 times per second speed

(4) peeling upward by 90˚ deg. In the direction of X, speed : 50mm/min

7. Block Diagram

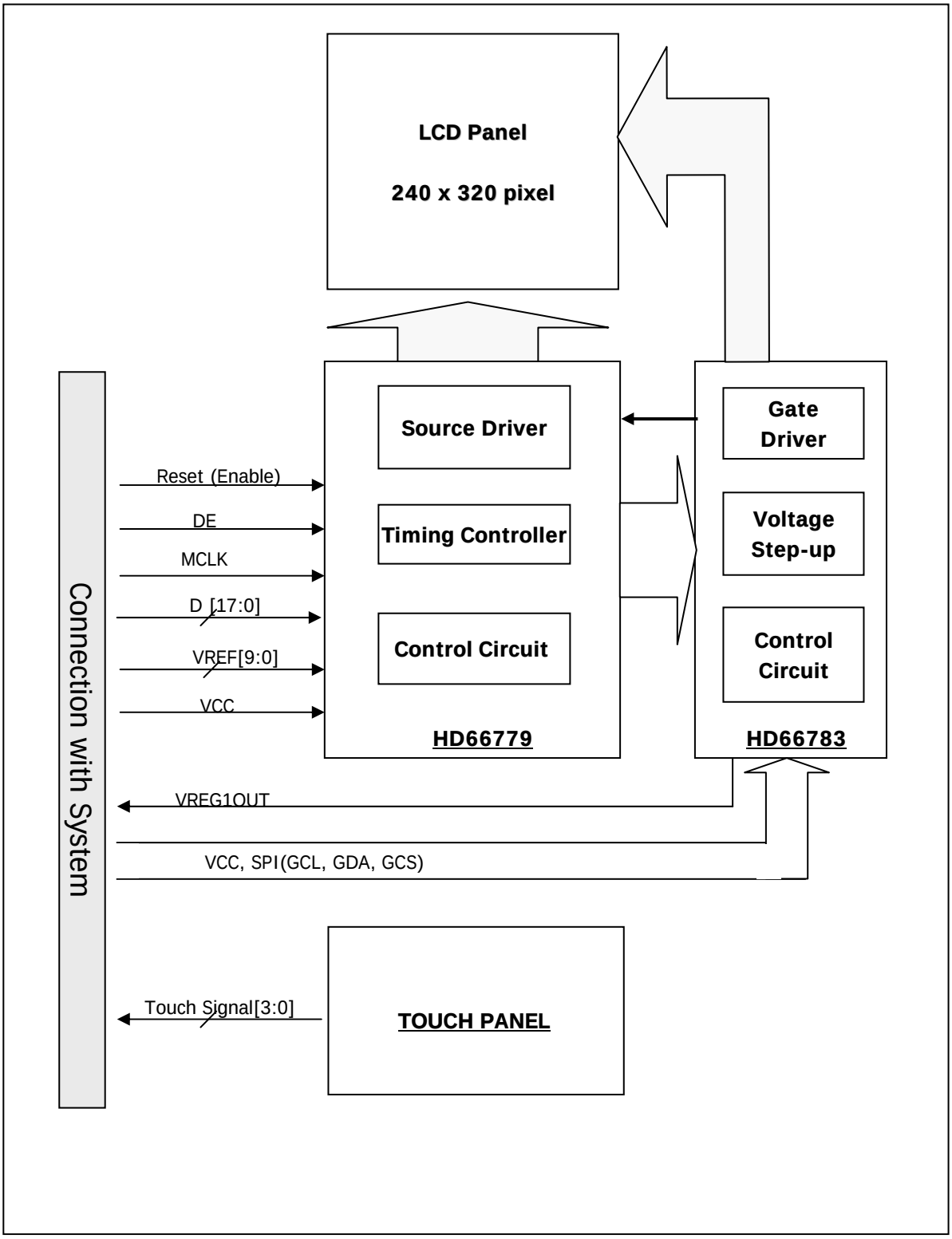

8. Input Terminal Pin Assignment

8.1 Input Connector Signal

Recommended connector : Hirose (FH23-61-03SHW)

Pin No.	Descriptions	Pin No.	Descriptions	Pin No.	Descriptions
1	DE	21	VDD(3.3V)	41	B5
2	MCLK	22	VREG1OUT	42	B4
3	ENABLE	23	VREG1OUT	43	B3
4	TSP1(Top)	24	TSP3(Bottom)	44	B2
5	VSS	25	VSS	45	B1
6	VCOML	26	GCL	46	B0
7	GCS	27	TSP4(Right)	47	VREF4P
8	AVSS	28	GDA	48	VREF3P
9	NC	29	R5	49	VREF2P
10	NC	30	R4	50	VREF1P
11	NC	31	R3	51	VREF0P
12	NC	32	R2	52	VREF4N
13	VSS	33	R1	53	VREF3N
14	TSP2(Left)	34	R0	54	VREF2N
15	NC	35	G5	55	VREF1N
16	NC	36	G4	56	VREF0N
17	NC	37	G3	57	LED+
18	NC	38	G2	58	LED+
19	AVSS	39	G1	59	LED-
20	VDD(3.3V)	40	G0	60	LED-
				61	VCOMH

8.2 Relations with Input signal and display colors

Display colors		Data signal(0 : Low level, 1: High level)																	
		R5	R4	R3	R2	R1	R0	G5	G4	G3	G2	G1	G0	B5	B4	B3	B2	B1	B0
Basic Color	Black	0	0	0	0	0	0	0	0	0	0	0	0	0	0	0	0	0	0
	Blue	0	0	0	0	0	0	0	0	0	0	0	0	1	1	1	1	1	1
	Red	1	1	1	1	1	1	0	0	0	0	0	0	0	0	0	0	0	0
	Magenta	1	1	1	1	1	1	0	0	0	0	0	0	1	1	1	1	1	1
	Green	0	0	0	0	0	0	1	1	1	1	1	1	0	0	0	0	0	0
	Cyan	0	0	0	0	0	0	1	1	1	1	1	1	1	1	1	1	1	1
	Yellow	1	1	1	1	1	1	1	1	1	1	1	1	0	0	0	0	0	0
	White	1	1	1	1	1	1	1	1	1	1	1	1	1	1	1	1	1	1
Red	Black	0	0	0	0	0	0	0	0	0	0	0	0	0	0	0	0	0	0
	Dark	0	0	0	0	0	1	0	0	0	0	0	0	0	0	0	0	0	0
		0	0	0	0	1	0	0	0	0	0	0	0	0	0	0	0	0	0
	. .	.	.	.	.	.	.	.	.	.	.	.	.	.	.	.	.	.	.
	. .	.	.	.	.	.	.	.	.	.	.	.	.	.	.	.	.	.	.
	Bright	1	1	1	1	0	1	0	0	0	0	0	0	0	0	0	0	0	0
		1	1	1	1	1	0	0	0	0	0	0	0	0	0	0	0	0	0
	Red	1	1	1	1	1	1	0	0	0	0	0	0	0	0	0	0	0	0
Green	Black	0	0	0	0	0	0	0	0	0	0	0	0	0	0	0	0	0	0
	Dark	0	0	0	0	0	0	0	0	0	0	0	1	0	0	0	0	0	0
		0	0	0	0	0	0	0	0	0	0	1	0	0	0	0	0	0	0
	. .	.	.	.	.	.	.	.	.	.	.	.	.	.	.	.	.	.	.
	. .	.	.	.	.	.	.	.	.	.	.	.	.	.	.	.	.	.	.
	Bright	0	0	0	0	0	0	1	1	1	1	0	1	0	0	0	0	0	0
		0	0	0	0	0	0	1	1	1	1	1	0	0	0	0	0	0	0
	Green	0	0	0	0	0	0	1	1	1	1	1	1	0	0	0	0	0	0
Blue	Black	0	0	0	0	0	0	0	0	0	0	0	0	0	0	0	0	0	0
	Dark	0	0	0	0	0	0	0	0	0	0	0	0	0	0	0	0	0	1
		0	0	0	0	0	0	0	0	0	0	0	0	0	0	0	0	1	0
	. .	.	.	.	.	.	.	.	.	.	.	.	.	.	.	.	.	.	.
	. .	.	.	.	.	.	.	.	.	.	.	.	.	.	.	.	.	.	.
	Bright	0	0	0	0	0	0	0	0	0	0	0	0	1	1	1	1	0	1
		0	0	0	0	0	0	0	0	0	0	0	0	1	1	1	1	1	0
	Blue	0	0	0	0	0	0	0	0	0	0	0	0	1	1	1	1	1	1

9. Input Signal Timing

9.1 Interface Timing Characteristics

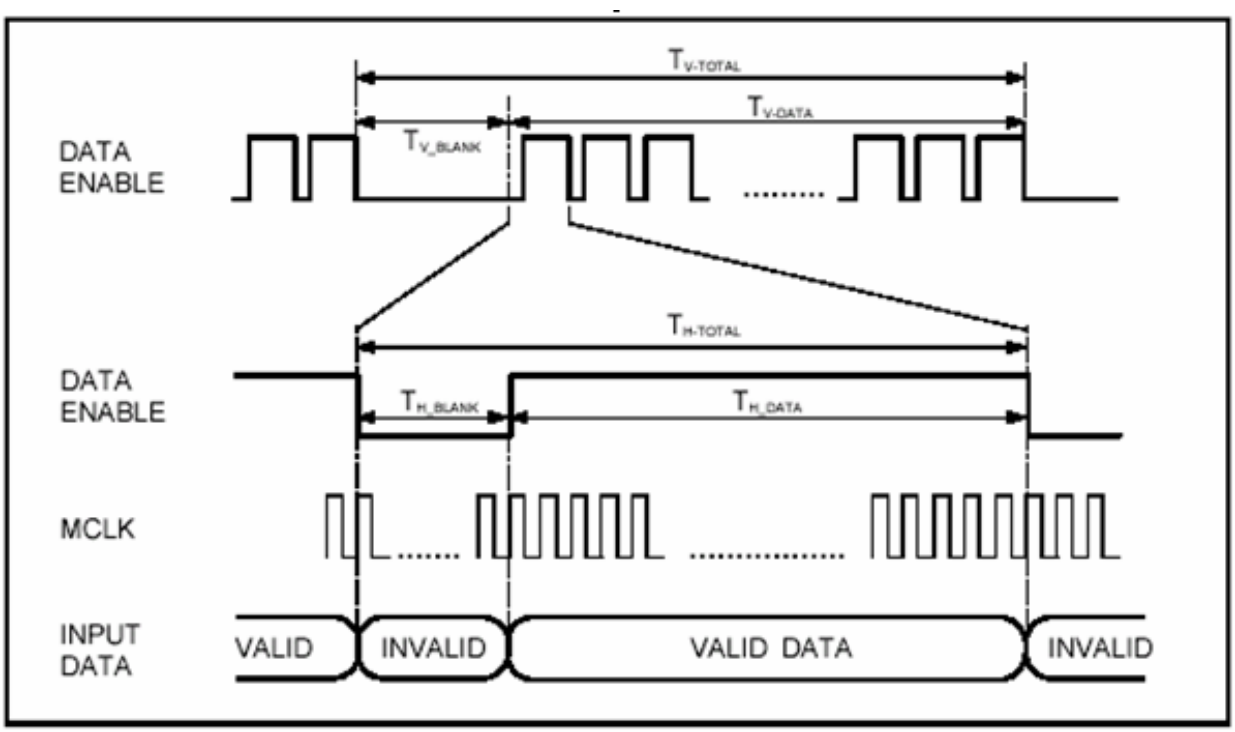

Parameter	Symbol	Min	Typ	Max	Unit
Vertical Total	Tv_total	-	342	-	LINE
Vertical Blank Time	Tv_blank	-	22	-	LINE
Vertical Display	Tv_data	-	320	-	LINE
Horizontal Total	Th_total	-	260	-	MCLK
Horizontal Blank Time	Th_blank	-	20	-	MCLK
Horizontal Display	Th_data	-	240	-	MCLK
MCLK	Fmclk	5.0	5.32	6.8	MHz

9.2 Interface Timing Characteristics

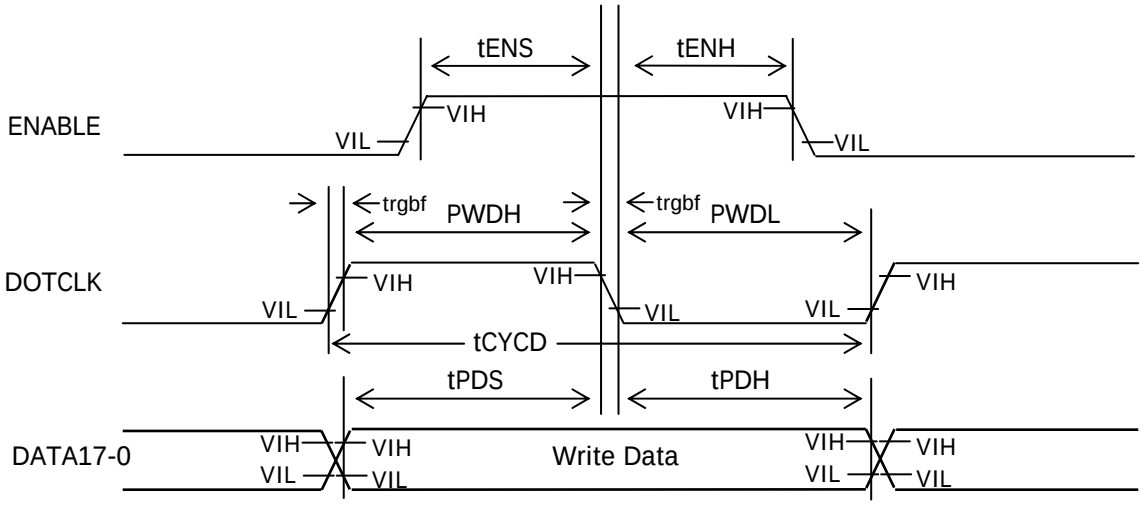

Item	Symbol	Min	Typ	Max	Unit
ENABLE Set up time	tS	30	—	—	ns
ENABLE Hold time	tENH	30	—	—	ns
DOTCLK “Low”-level pulse width	PWDL	40	—	—	ns
DOTCLK “High”-level pulse width	PWDH	40	—	—	ns
DOTCLK cycle time	tCYCD	100	—	—	ns
Data Set up time	tPDS	30	—	—	ns
Data Hold time	tPDH	30	—	—	ns
DOTCLK rise/fall time	trgbr,trgbf	—	—	25	ns

9.3 Serial Interface & Reset

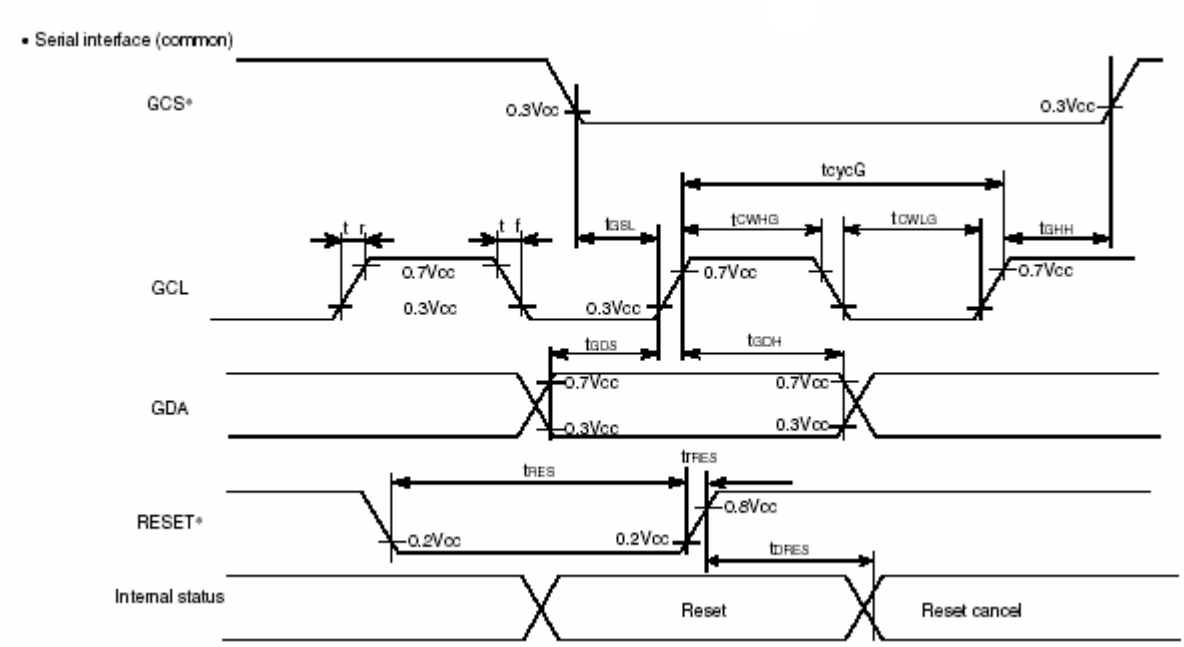

GCL cycle time	tcycG	GCL	2.5	—	—	μs
GCL high-level width	tCWHG	GCL	1.0	—	—	μs
GCL low-level width	tCWLG	GCL	1.0	—	—	μs
GDA setup time	tGDS	GCL, GDA	1.0	—	—	μs
GDA hold time	tGDH	GCL, GDA	1.0	—	—	μs
GCS low setup time	tGSL	GCL, GCS*	1.0	—	—	μs
GCS high hold time	tGHH	GCL, GCS*	1.0	—	—	μs

Reset low-level width	tRES	RESET*	1.0	—	—	ms
Reset rising time	trRES	RESET*	—	—	10	μs
Delay time of reset cancel	tDRES	RESET*	—	—	500	μs

10. Power Sequence

10.1 Power On :After Reset, Internal Register must be set. Refer to below.

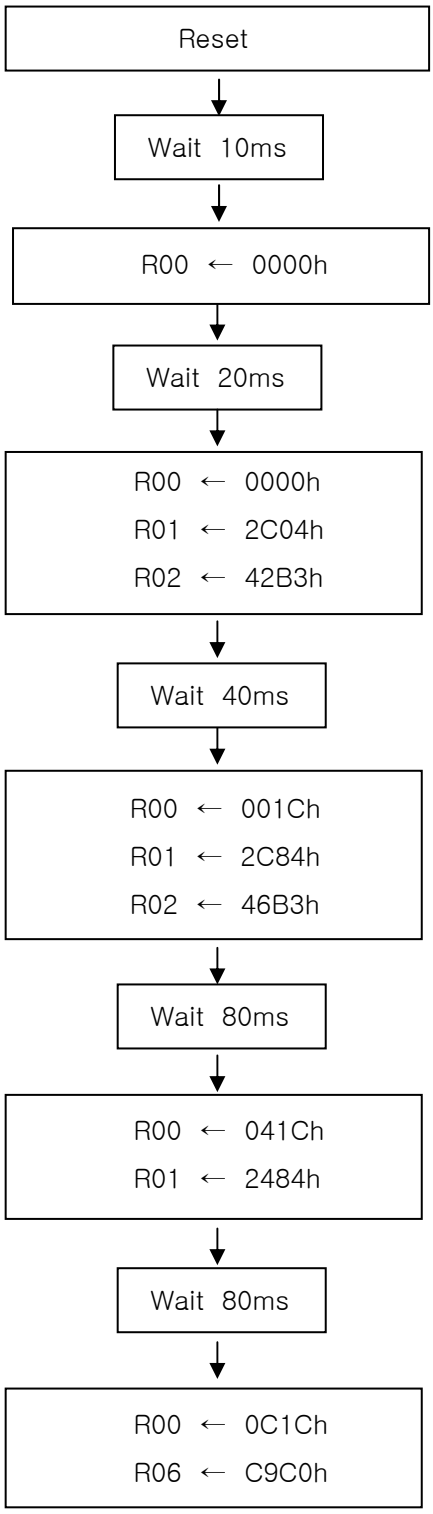

10.2 Power Off

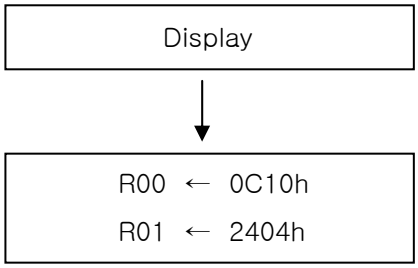

11.2 FPC Layout

[Component layout]

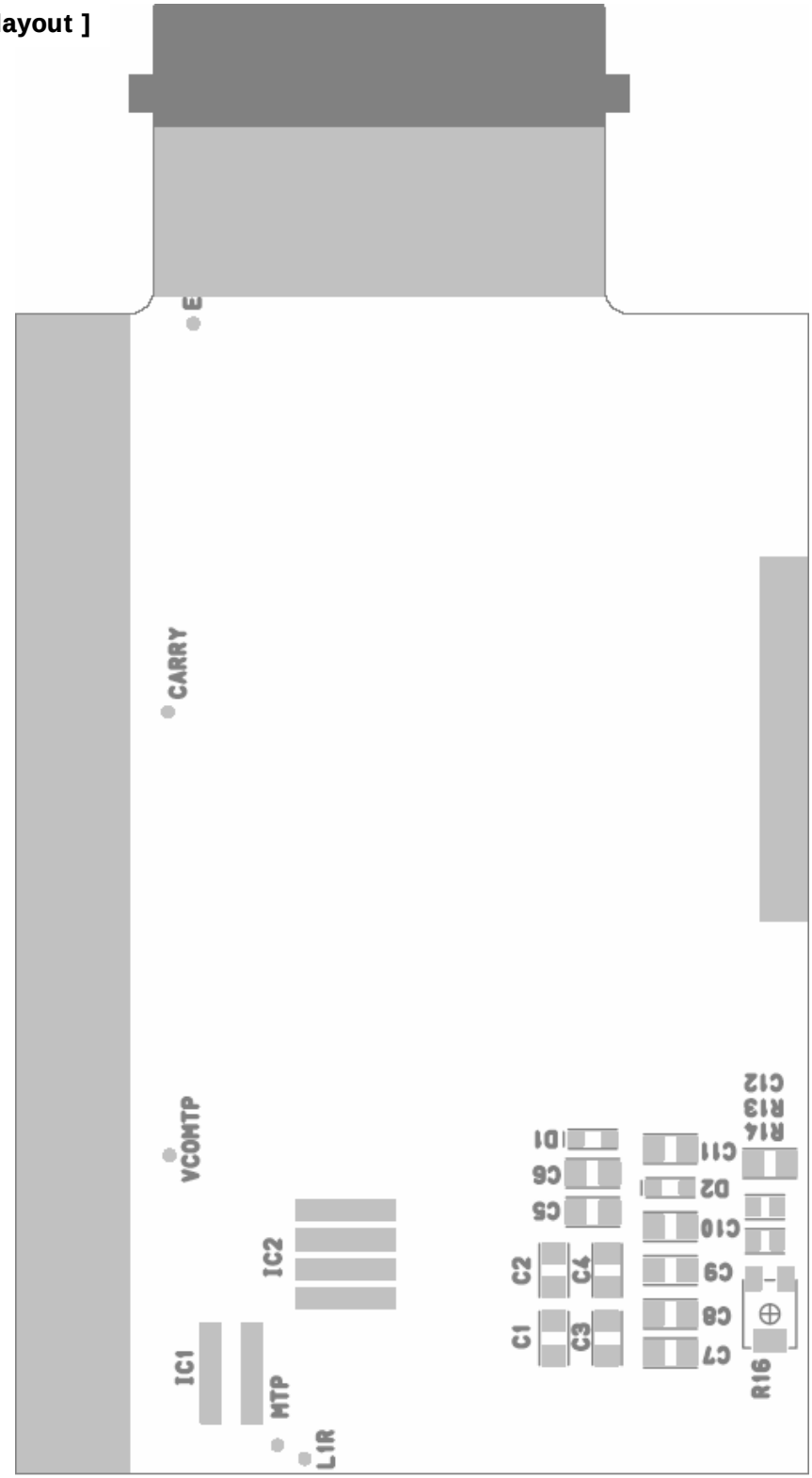

11.3 Circuit of FPC

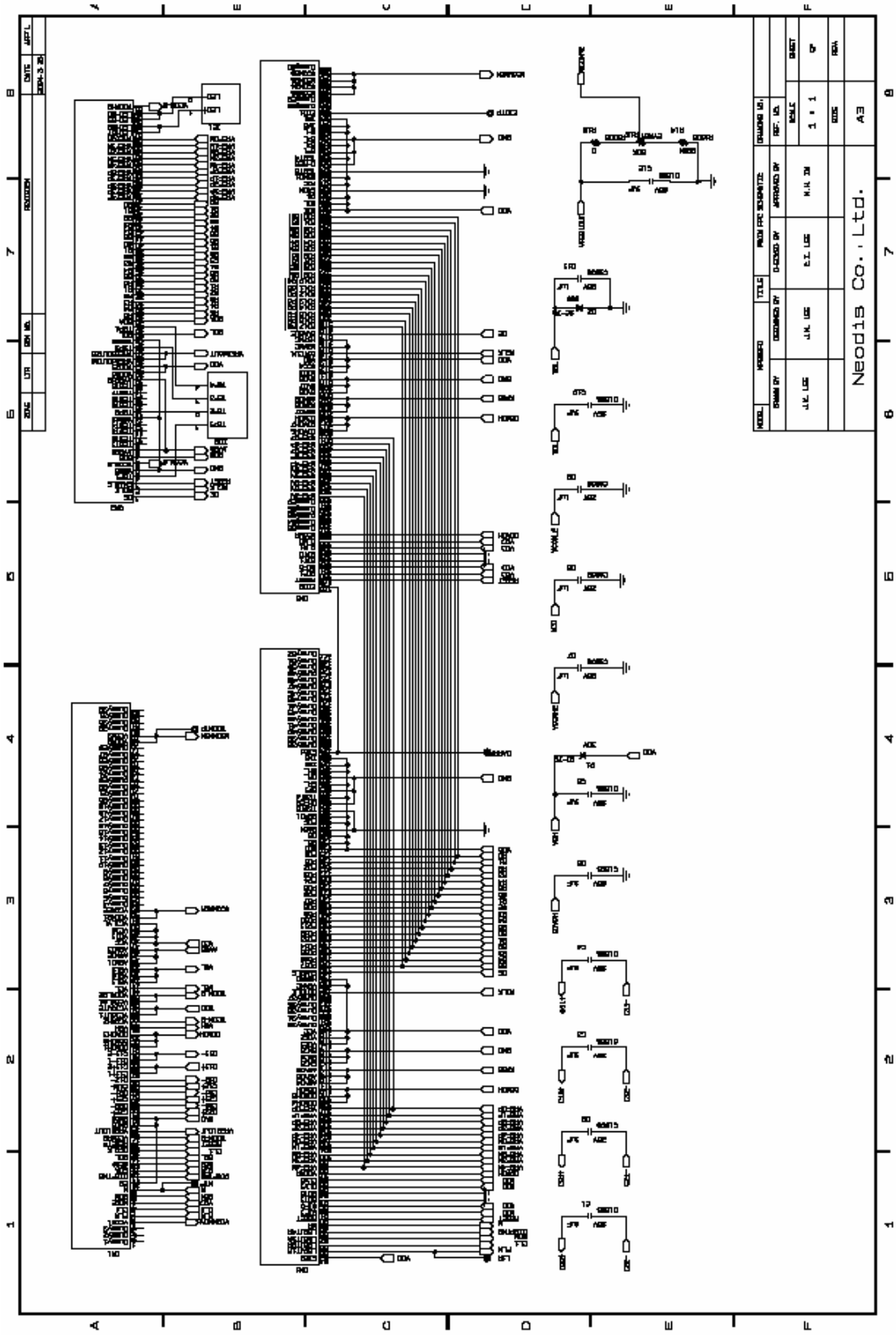

12. Reliability Test

No	Test Item	Test Conditions	Remark
1	High Temperature Operation	70℃, 96 Hr	
2	Low Temperature Operation	-20℃, 96 Hr	
3	High Temperature and High Humidity Operation	60℃, 90% RH, 96 Hr	
4	High Temperature and High Humidity Storage	80℃, 80% RH, 24 Hr	
5	High Temperature Storage	80℃, 96Hr	
6	Low Temperature Storage	-30℃, 96 Hr	
7	Temperature and Humidity Cycle	25℃/0% → - 25℃/0% → 25℃/25% → 80℃/80% (5min) (30min) (5min) (30min) , 5 cycle	
8	Thermal Shock	- 30℃(30min) → 80℃(30min), 20 cycle	

* All appearance decision should be done from inside range of viewing area.

13. LCD Module Outline Dimensions

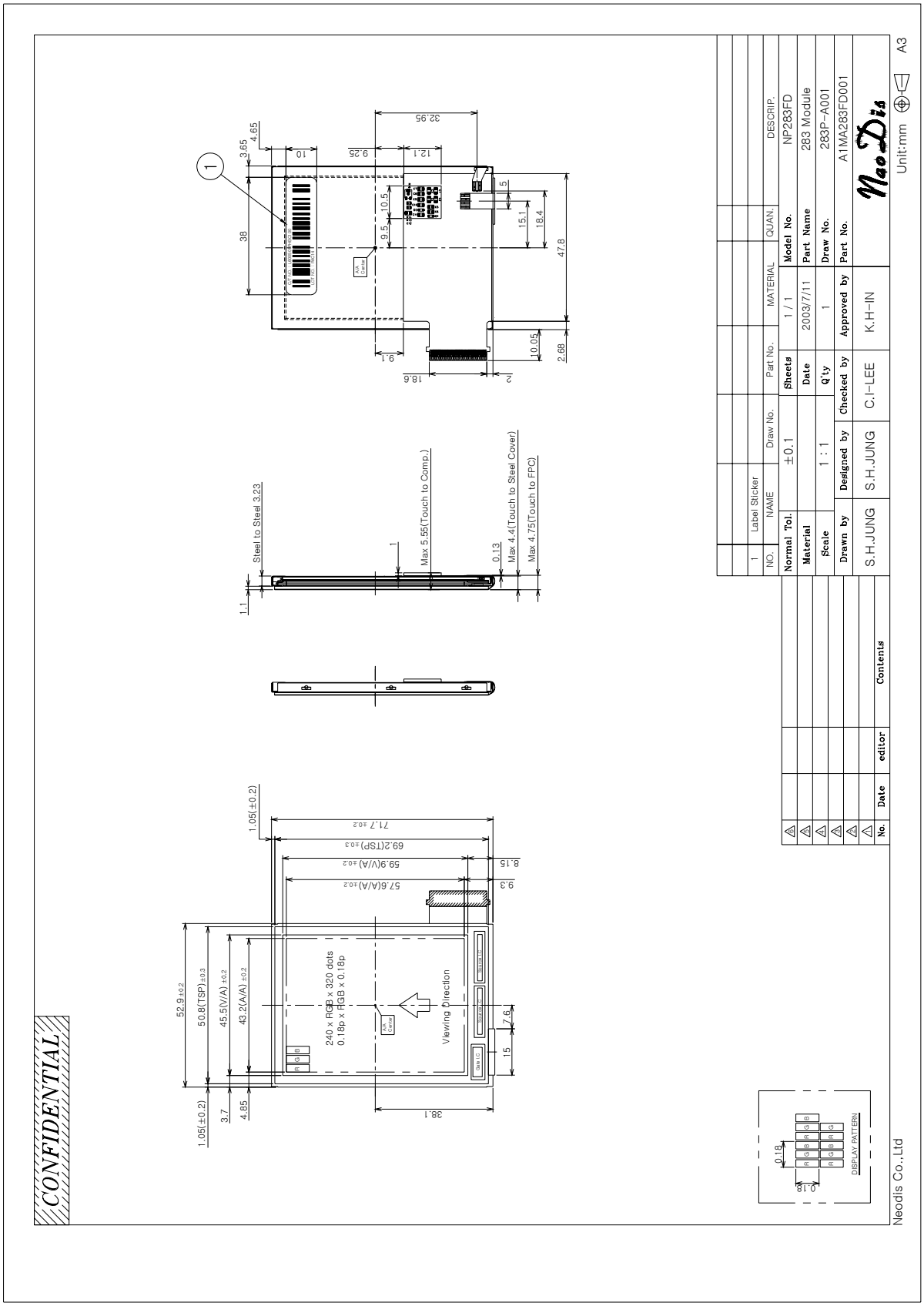

14. Packing Form & Designation of Lot Mark & Bar Code Marking

14-1. Packing Form and Marking Drawing

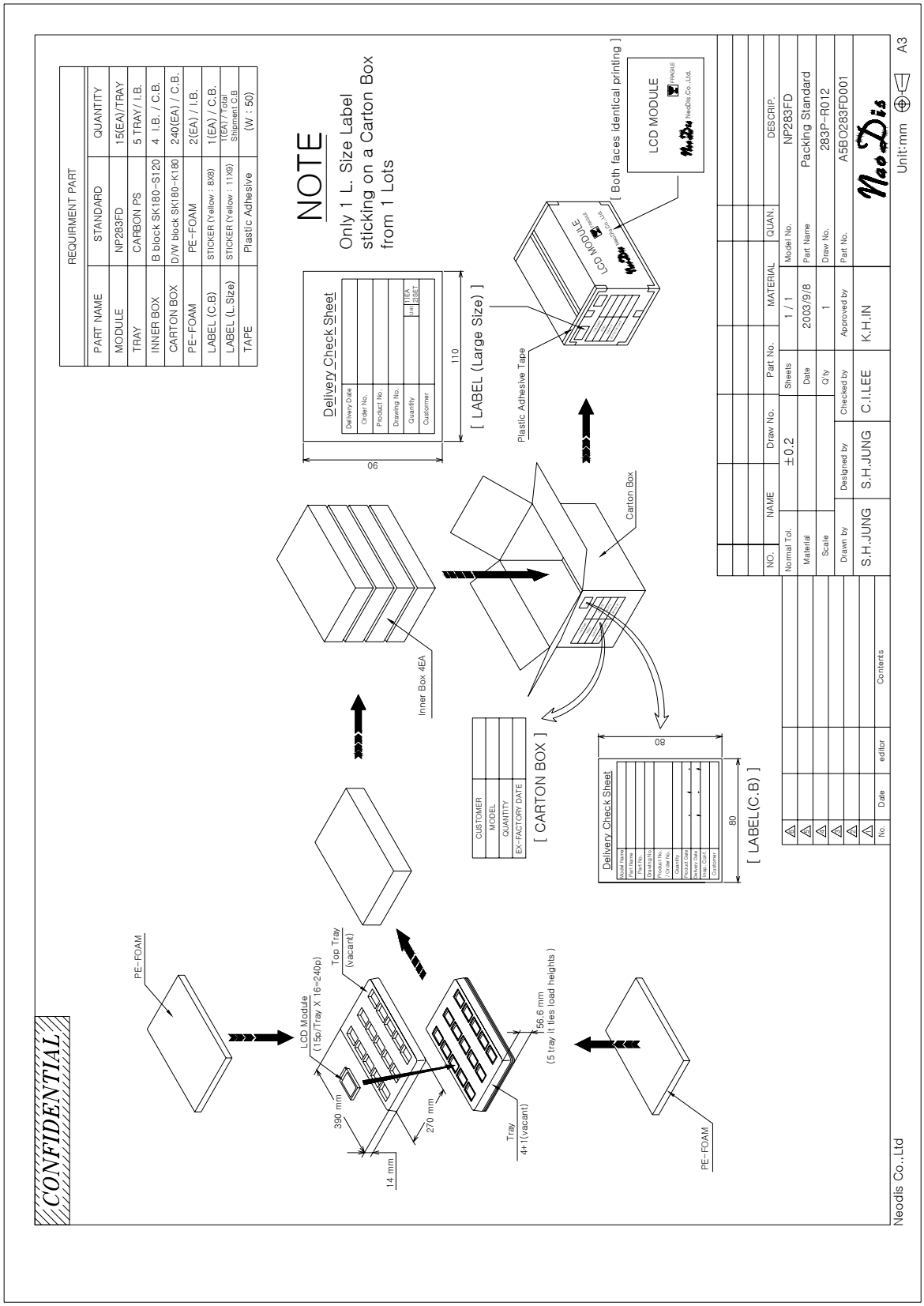

14-2. Designation of Lot Mark

a) Lot Mark

A	B	C	D	E

A: OEM MAKER CODE, LGINNOTEK = ‘ J ‘, DASOLE = `D`, SEAJONG = `S` NEWCO = `N`,
AD TECH = `A`, DS-TECH = `V`, RAYGEN= `R`, NEXSCIEN = `X`,
WOO IL = `W`, DIABELL = `B`, LDI = `L`

B : YEAR

C : MONTH

D,E : DATE

Note:

1. YEAR

YEAR	2003	2004	2005	2006	2007	2008	2009	2010	2011	2012
Mark	3	4	5	6	7	8	9	0	1	2

2. MONTH

MONTH	Jan.	Feb.	Mar.	Apr.	May.	Jun.	Jul.	Aug.	Sep.	Oct.	Nov.	Dec.
Mark	1	2	3	4	5	6	7	8	9	A	B	C

b) Lot Mark location

The serial number is indicated in the label
and the label is recorded in the reverse side of LCD module.

14-3. Bar Code Marking

a) Shape

C/T NO. : L 6 0 0 5 0 1 P H B I 1 0 0

LOT NO. : R 4 C 1 4

b) Contents

	1 digit	4 digits	2 digits	2 digits	2 digits	3 digits
Supplier	Commodity Code	Assembly Code	Revision Level	Supplier / Site of MFG	Week /Year of MFG	Unique sequence Identifier
LG Philips	L	6005	01	PH		

c) Week_Year of Manufacture

Week Beginning	Week Code	Week Number
1-Dec-03	A0	1
8-Dec-03	A1	2
15-Dec-03	A2	3
22-Dec-03	A3	4
29-Dec-03	A4	5
5-Jan-04	A5	6
12-Jan-04	A6	7
19-Jan-04	A7	8
26-Jan-04	A8	9
2-Feb-04	A9	10
9-Feb-04	AA	11
16-Feb-04	AB	12
23-Feb-04	AC	13
1-Mar-04	AD	14
8-Mar-04	AE	15
15-Mar-04	AF	16
22-Mar-04	AG	17
29-Mar-04	AH	18
5-Apr-04	AI	19
12-Apr-04	AJ	20
19-Apr-04	AK	21
26-Apr-04	AL	22
3-May-04	AM	23
10-May-04	AN	24
17-May-04	AO	25
24-May-04	AP	26
31-May-04	AQ	27
7-Jun-04	AR	28
14-Jun-04	AS	29
21-Jun-04	AT	30
28-Jun-04	AU	31
5-Jul-04	AV	32
12-Jul-04	AW	33
19-Jul-04	AX	34
26-Jul-04	AY	35
2-Aug-04	AZ	36
9-Aug-04	B0	37
16-Aug-04	B1	38
23-Aug-04	B2	39
30-Aug-04	B3	40
6-Sep-04	B4	41
13-Sep-04	B5	42
20-Sep-04	B6	43
27-Sep-04	B7	44
4-Oct-04	B8	45
11-Oct-04	B9	46
18-Oct-04	BA	47
25-Oct-04	BB	48
1-Nov-04	BC	49
8-Nov-04	BD	50
15-Nov-04	BE	51
22-Nov-04	BF	52
29-Nov-04	BG	53
6-Dec-04	BH	54
13-Dec-04	BI	55
20-Dec-04	BJ	56
27-Dec-04	BK	57
3-Jan-05	BL	58
10-Jan-05	BM	59
17-Jan-05	BN	60
24-Jan-05	BO	61
31-Jan-05	BP	62
7-Feb-05	BQ	63
14-Feb-05	BR	64
21-Feb-05	BS	65
28-Feb-05	BT	66

Week Beginning	Week Code	Week Number
18-Apr-05	C0	73
25-Apr-05	C1	74
2-May-05	C2	75
9-May-05	C3	76
16-May-05	C4	77
23-May-05	C5	78
30-May-05	C6	79
6-Jun-05	C7	80
13-Jun-05	C8	81
20-Jun-05	C9	82
27-Jun-05	CA	83
4-Jul-05	CB	84
11-Jul-05	CC	85
18-Jul-05	CD	86
25-Jul-05	CE	87
1-Aug-05	CF	88
8-Aug-05	CG	89
15-Aug-05	CH	90
22-Aug-05	CI	91
29-Aug-05	CJ	92
5-Sep-05	CK	93
12-Sep-05	CL	94
19-Sep-05	CM	95
26-Sep-05	CN	96
3-Oct-05	CO	97
10-Oct-05	CP	98
17-Oct-05	CQ	99
24-Oct-05	CR	100
31-Oct-05	CS	101
7-Nov-05	CT	102
14-Nov-05	CU	103
21-Nov-05	CV	104
28-Nov-05	CW	105
5-Dec-05	CX	106
12-Dec-05	CY	107
19-Dec-05	CZ	108
26-Dec-05	D0	109
2-Jan-06	D1	110
9-Jan-06	D2	111
16-Jan-06	D3	112
23-Jan-06	D4	113
30-Jan-06	D5	114
6-Feb-06	D6	115
13-Feb-06	D7	116
20-Feb-06	D8	117
27-Feb-06	D9	118
6-Mar-06	DA	119
13-Mar-06	DB	120
20-Mar-06	DC	121
27-Mar-06	DD	122
3-Apr-06	DE	123
10-Apr-06	DF	124
17-Apr-06	DG	125
24-Apr-06	DH	126
1-May-06	DI	127
8-May-06	DJ	128
15-May-06	DK	129
22-May-06	DL	130
29-May-06	DM	131
5-Jun-06	DN	132
12-Jun-06	DO	133
19-Jun-06	DP	134
26-Jun-06	DQ	135
3-Jul-06	DR	136
10-Jul-06	DS	137
17-Jul-06	DT	138

Week Beginning	Week Code	Week Number
4-Sep-06	E0	145
11-Sep-06	E1	146
18-Sep-06	E2	147
25-Sep-06	E3	148
2-Oct-06	E4	149
9-Oct-06	E5	150
16-Oct-06	E6	151
23-Oct-06	E7	152
30-Oct-06	E8	153
6-Nov-06	E9	154
13-Nov-06	EA	155
20-Nov-06	EB	156
27-Nov-06	EC	157
4-Dec-06	ED	158
11-Dec-06	EE	159
18-Dec-06	EF	160
25-Dec-06	EG	161
1-Jan-07	EH	162
8-Jan-07	EI	163
15-Jan-07	EJ	164
22-Jan-07	EK	165
29-Jan-07	EL	166
5-Feb-07	EM	167
12-Feb-07	EN	168
19-Feb-07	EO	169
26-Feb-07	EP	170
5-Mar-07	EQ	171
12-Mar-07	ER	172
19-Mar-07	ES	173
26-Mar-07	ET	174
2-Apr-07	EU	175
9-Apr-07	EV	176
16-Apr-07	EW	177
23-Apr-07	EX	178
30-Apr-07	EY	179
7-May-07	EZ	180
14-May-07	F0	181
21-May-07	F1	182
28-May-07	F2	183
4-Jun-07	F3	184
11-Jun-07	F4	185
18-Jun-07	F5	186
25-Jun-07	F6	187
2-Jul-07	F7	188
9-Jul-07	F8	189
16-Jul-07	F9	190
23-Jul-07	FA	191
30-Jul-07	FB	192
6-Aug-07	FC	193
13-Aug-07	FD	194
20-Aug-07	FE	195
27-Aug-07	FF	196
3-Sep-07	FG	197
10-Sep-07	FH	198
17-Sep-07	FI	199
24-Sep-07	FJ	200
1-Oct-07	FK	201
8-Oct-07	FL	202
15-Oct-07	FM	203
22-Oct-07	FN	204
29-Oct-07	FO	205
5-Nov-07	FP	206
12-Nov-07	FQ	207
19-Nov-07	FR	208
26-Nov-07	FS	209
3-Dec-07	FT	210

Week Beginning	Week Code	Week Number
21-Jan-08	G0	217
28-Jan-08	G1	218
4-Feb-08	G2	219
11-Feb-08	G3	220
18-Feb-08	G4	221
25-Feb-08	G5	222
3-Mar-08	G6	223
10-Mar-08	G7	224
17-Mar-08	G8	225
24-Mar-08	G9	226
31-Mar-08	GA	227
7-Apr-08	GB	228
14-Apr-08	GC	229
21-Apr-08	GD	230
28-Apr-08	GE	231
5-May-08	GF	232
12-May-08	GG	233
19-May-08	GH	234
26-May-08	GI	235
2-Jun-08	GJ	236
9-Jun-08	GK	237
16-Jun-08	GL	238
23-Jun-08	GM	239
30-Jun-08	GN	240
7-Jul-08	GO	241
14-Jul-08	GP	242
21-Jul-08	GQ	243
28-Jul-08	GR	244
4-Aug-08	GS	245
11-Aug-08	GT	246
18-Aug-08	GU	247
25-Aug-08	GV	248
1-Sep-08	GW	249
8-Sep-08	GX	250
15-Sep-08	GY	251
22-Sep-08	GZ	252
29-Sep-08	H0	253
6-Oct-08	H1	254
13-Oct-08	H2	255
20-Oct-08	H3	256
27-Oct-08	H4	257
3-Nov-08	H5	258
10-Nov-08	H6	259
17-Nov-08	H7	260
24-Nov-08	H8	261
1-Dec-08	H9	262
8-Dec-08	HA	263
15-Dec-08	HB	264
22-Dec-08	HC	265
29-Dec-08	HD	266
5-Jan-09	HE	267
12-Jan-09	HF	268
19-Jan-09	HG	269
26-Jan-09	HH	270
2-Feb-09	HI	271
9-Feb-09	HJ	272
16-Feb-09	HK	273
23-Feb-09	HL	274
2-Mar-09	HM	275
9-Mar-09	HN	276
16-Mar-09	HO	277
23-Mar-09	HP	278
30-Mar-09	HQ	279
6-Apr-09	HR	280
13-Apr-09	HS	281
20-Apr-09	HT	282

15. General Precautions

15.1 Handling

(1) When the module is assembled, it should be attached to the system firmly.
Be careful not to twist and bend the module.

(2) Refrain from strong mechanical shock and / or any force to the module. In addition to damage, this may cause improper operation or damage to the module and back-light unit.

(3) Note that Touch panel is very fragile and could be easily damaged. Do not press or scratch the surface harder than a HB pencil lead.

(4) Wipe off water droplets or oil immediately. If you leave the droplets for a long time, Staining and discoloration may occur.

(5) If the surface of the polarizer is dirty, clean it using some absorbent cotton or soft cloth.

(6) The desirable cleaners are water, IPA (Isopropyl Alcohol) or Hexane.
Do not use Ketone type materials (ex. Acetone), Ethyl alcohol, Toluene, Ethyl acid or Methyl chloride. It might permanent damage to the polarizer due to chemical reaction.

(7) If the liquid crystal material leaks from the panel, it should be kept away from the eyes or mouth. In case of contact with hands, legs or clothes, it must be washed away thoroughly with soap.

(8) Protect the module from static, it may cause damage to the CMOS Gate Array IC.

(9) Use finger-stalls with soft gloves in order to keep display clean during the incoming inspection and assembly process.

(10) Do not disassemble the module.

(11) Protection film for polarizer on the module shall be slowly peeled off just before use so that the electrostatic charge can be minimized.

(12) Pins of I/F connector shall not be touched directly with bare hands.

15.2 Storage

(1) Do not leave the panel in high temperature, and high humidity for a long time.
It is highly recommended to store the module with temperature from 0 to 35℃
and relative humidity of less than 70%.

(2) Do not store the TFT-LCD module in direct sunlight.

(3) The module shall be stored in a dark place.
It is prohibited to apply sunlight or fluorescent light during the store.

15.3 Operation

(1) Do not connect, disconnect the module in the “Power On” condition.

(2) Power supply should always be turned on/off by the item 3.1 “Power on/off sequence”

15.4. Static electricity

(1) Ground soldering iron tips, tools and testers when they operate.

(2) Ground your body when handling the products

(3) DO NOT apply voltage to the input terminal without applying power supply.

(4) DO NOT apply voltage that exceeds the absolute maximum rating.

(5) Store the products in an anti-electrostatic container.

15.5 Others

(1) The liquid-crystal is deteriorated by ultraviolet rays.
Do not leave it in direct sunlight and strong ultraviolet rays for many hours.

(2) Avoid condensation of water. It may result in improper operation or disconnection of electrode.

(3) Do not exceed the absolute maximum rating value. (the supply voltage variation,
input voltage variation, variation in part contents and environmental temperature, and so on).

(4) If the panel displays the same pattern continuously for a long period of time, it can be the
situation when the image “Sticks” to the screen.

(5) This panel has its circuitry FPC on the bottom side and should be handled carefully
in order not to be stressed.