Model Name: S320HVM03

Issue Date: 2021/11/11

(∗)Final Specifications

Contents

Record of Revision

Version	Date	Page	Description
0.0	2021/11/11		1st release

1. General Description

This specification applies to the 31.5 inch Color TFT-LCD Module **S320HVM03**. This LCD module has a TFT active matrix type liquid crystal panel 1920x1080 pixels, and diagonal size of 31.5 inch. This module supports 1920x1080 mode. Each pixel is divided into Red, Green and Blue sub-pixels or dots which are arranged in vertical stripes. Gray scale or the brightness of the sub-pixel color is determined with a 8-bit gray scale signal for each dot.

The **S320HVM03** has been designed to apply the 8-bit 2 channel LVDS interface method. It is intended to support displays where high brightness, wide viewing angle.

*** General Information**

Items	Specification	Unit	Note
Active Screen Size	31.5	inch	
Display Area	698.4 (H) x 392.85(V)	mm	
Outline Dimension	719.2(H) x 413.7(V) x 27.4 (D)	mm	D: Max., to DB cover
Driver Element	a-Si TFT active matrix		
Bezel Opening	703.4(H) x 397.9(V)	mm	
Display Colors	8 bits	Colors	
Number of Pixels	1,920x1,080	Pixel	
Pixel Pitch	0.3637 (H) x 0.3637 (W)	mm	
Pixel Arrangement	RGB vertical stripe		
Display Operation Mode	Normally Black		
Surface Treatment	Anti-Glare, 3H		Haze=44%
Rotate Function	Unachievable		Note 1
Display Orientation	Portrait/Landscape Enabled		Note 2

Note 1: Rotate Function refers to LCD display could be able to rotate. This function does not work in this model.

Note 2: Please refer to 5.1 Placement Suggestions.

2. Absolute Maximum Ratings

The followings are maximum values which, if exceeded, may cause faulty operation or damage to the unit

Item	Symbol	Min	Max	Unit	Conditions
Logic/LCD Drive Voltage	Vcc	-0.3	14	[Volt]	Note 1
Input Voltage of Signal	Vin	-0.3	4	[Volt]	Note 1
Operating Temperature	TOP	0	+50	[°C]	Note 2
Operating Humidity	HOP	10	90	[%RH]	Note 2
Storage Temperature	TST	-20	+60	[°C]	Note 2
Storage Humidity	HST	10	90	[%RH]	Note 2
Panel Surface Temperature	PST		65	[°C]	Note 3

Note 1: Duration:50 msec.

Note 2 : Maximum Wet-Bulb should be 39□ and No condensation.

The relative humidity must not exceed 90% non-condensing at temperatures of 40□ or less. At temperatures greater than 40□, the wet bulb temperature must not exceed 39□.

Note 3: Surface temperature is measured at 50℃ Dry condition

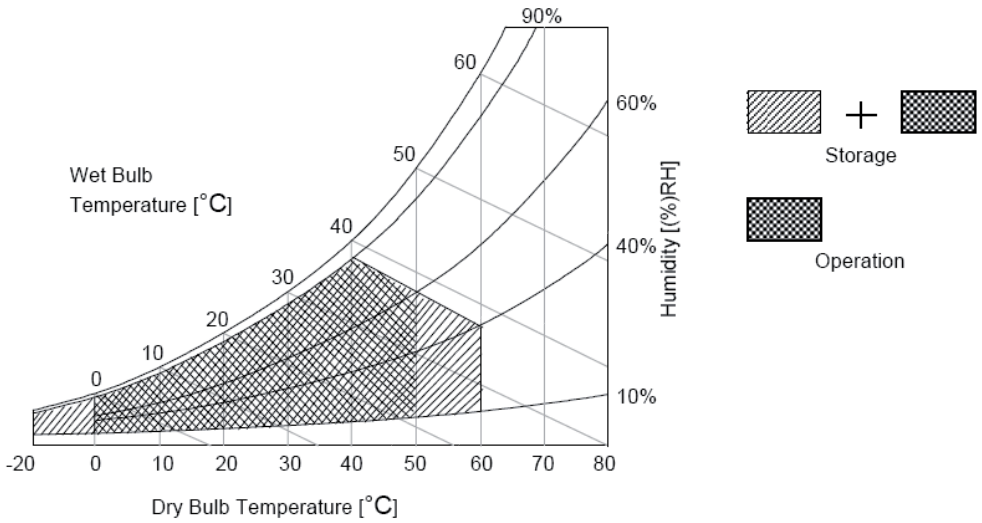

3. Electrical Specification

The **S320HVM03** requires two power inputs. One is employed to power the LCD electronics and to drive the TFT array and liquid crystal. The other is to power Back Light Unit.

3.1 Electrical Characteristics

3.1.1 DC Characteristics (Ta = 25 ± 2 ℃)

Parameter		Symbol	Value			Unit	Note
			Min.	Typ.	Max		
LCD							
Power Supply Input Voltage		V_{DD}	10.8	12	13.2	V_{DC}	
Power Supply Input Current		I_{DD}	--	0.36	0.33	A	1
Power Consumption		P_C	--	4.32	4.35	Watt	1
Inrush Current		I_{RUSH}	--	--	4	A	2
Permissible Ripple of Power Supply Input Voltage		V_{RP}	--	--	V_{DD} * 5%	mV_{pk-pk}	3
LVDS Interface	Input Differential Voltage	$\lvert V_{ID} \rvert$	200	400	600	mV_{DC}	4
	Differential Input High Threshold Voltage	V_{TH}	+100	--	+300	mV_{DC}	4
	Differential Input Low Threshold Voltage	V_{TL}	-300	--	-100	mV_{DC}	4
	Input Common Mode Voltage	V_{ICM}	1.1	1.25	1.4	V_{DC}	4
CMOS Interface	Input High Threshold Voltage	V_{IH} (High)	2.7	--	3.3	V_{DC}	5
	Input Low Threshold Voltage	V_{IL} (Low)	0	--	0.6	V_{DC}	5
Backlight Power Consumption		P_{BL}		76.8	93.24	Watt	
Life time (MTTF)			50000			Hour	8, 9

3.1.2 AC Characteristics (Ta = 25 ± 2 ℃)

Parameter		Symbol	Value			Unit	Note
			Min.	Typ.	Max		
LVDS Interface	Receiver Clock : Spread Spectrum Modulation range	Fclk_ss	Fclk -3%	--	Fclk +3%	MHz	6
	Receiver Clock : Spread Spectrum Modulation frequency	Fss	30	--	200	KHz	6
	Receiver Data Input Margin Fclk = 85 MHz Fclk = 65 MHz	tRMG	 -0.4 -0.5	 -- --	 0.4 0.5	ns	7

3.1.3 Driver Characteristics

Item	Symbol	Min	Max	Unit	condition
Driver Surface Temperature	DST		100	[℃]	Note

Note : Any point on the driver surface must be less than 100℃ under any conditions.

3.1.4 TCON Characteristics

Item	Symbol	Min	Max	Unit	condition
TCON Surface Temperature	TST		85	[℃]	Note

Note: Any point on the TCON surface must be less than 85℃ under any conditions.

Note:

1. Test Condition:

(1) V_{DD} = 12.0V
(2) Fv = 60Hz
(3) Fclk= Max freq.
(4) Temperature = 25 ℃
(5) Typ. Input current : White Pattern
Max. Input current: Heavy loading pattern defined by factory

2. refer to “Section:3.3 Signal Timing Specification, Typical timing”

2. Measurement condition : Rising time = 400us

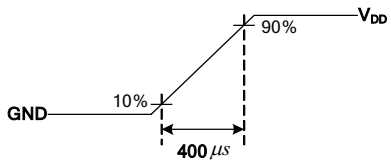

3. Test Condition:
(1) The measure point of V_{RP} is in LCM side after connecting the System Board and LCM.
(2) Under Max. Input current spec. condition.

4. V_{ICM} = 1.25V

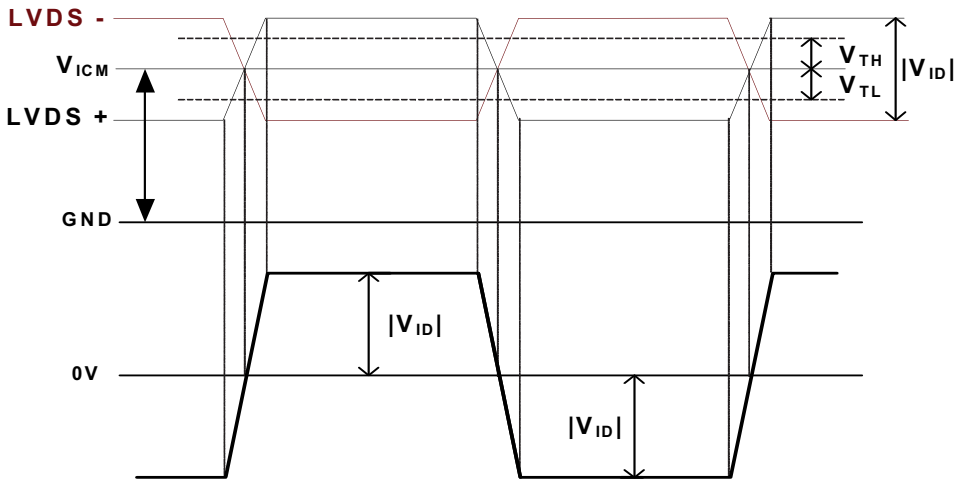

5. The measure points of V_{IH} and V_{IL} are in LCM side after connecting the System Board and LCM.
6. LVDS Receiver Clock SSCG (Spread spectrum clock generator) is defined as below figures

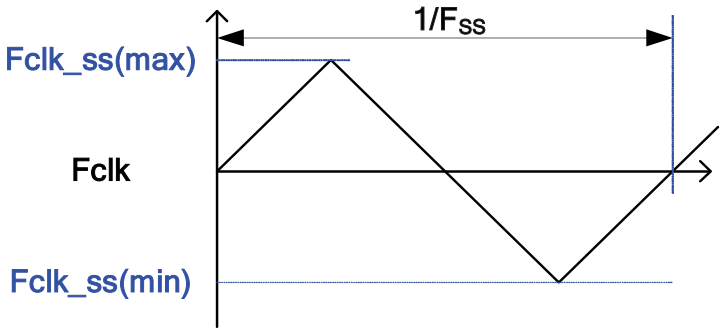

7. Receiver Data Input Margin

Parameter	Symbol	Rating			Unit	Note
		Min	Type	Max		
Input Clock Frequency	Fclk	Fclk (min)	--	Fclk (max)	MHz	**T=1/Fclk**
Input Data Position0	tRIP1	-|tRMG|	0	|tRMG|	ns	
Input Data Position1	tRIP0	T/7-|tRMG|	T/7	T/7+|tRMG|	ns	
Input Data Position2	tRIP6	2T/7-|tRMG|	2T/7	2T/7+|tRMG|	ns	
Input Data Position3	tRIP5	3T/7-|tRMG|	3T/7	3T/7+|tRMG|	ns	
Input Data Position4	tRIP4	4T/7-|tRMG|	4T/7	4T/7+|tRMG|	ns	
Input Data Position5	tRIP3	5T/7-|tRMG|	5T/7	5T/7+|tRMG|	ns	
Input Data Position6	tRIP2	6T/7-|tRMG|	6T/7	6T/7+|tRMG|	ns	

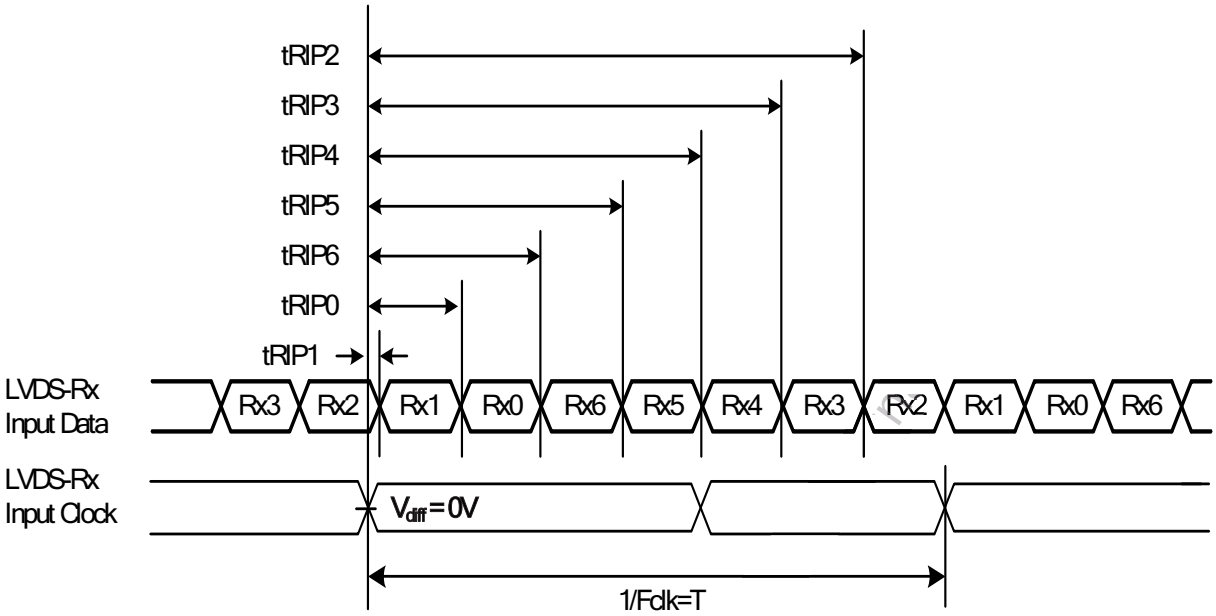

8. The relative humidity must not exceed 80% non-condensing at temperatures of 40℃ or less. At temperatures greater than 40℃, the wet bulb temperature must not exceed 39℃.

9. The lifetime (MTTF) is defined as the time which luminance of LED is 50% compared to its original value. [Operating condition: Continuous operating at Ta = 25±2℃, for single lamp/LED only]

3.2 Interface Connections

- LCD connector: FI-RTE51SZ-HF, 187059-5122, 115E51-0000RA-M3-R or compatible

PIN	Symbol	Description
1	N.C.	No connection
2	N.C.	No connection
3	N.C.	No connection
4	N.C.	No connection
5	IP10B	Open/Low(GND) for 8bit, High(3.3V) for 10bit
6	N.C.	No connection
7	LVDS_SEL	Open/High(3.3V) for NS, Low(GND) for JEIDA
8	N.C.	No connection
9	N.C.	No connection
10	N.C.	No connection
11	GND	Ground
12	CH1_Y0-	LVDS Channel 1, Signal 0-
13	CH1_Y0+	LVDS Channel 1, Signal 0+
14	CH1_Y1-	LVDS Channel 1, Signal 1-
15	CH1_Y1+	LVDS Channel 1, Signal 1+
16	CH1_Y2-	LVDS Channel 1, Signal 2-
17	CH1_Y2+	LVDS Channel 1, Signal 2+
18	GND	Ground
19	CH1_CLK-	LVDS Channel 1, Clock -
20	CH1_CLK+	LVDS Channel 1, Clock +
21	GND	Ground
22	CH1_Y3-	LVDS Channel 1, Signal 3-
23	CH1_Y3+	LVDS Channel 1, Signal 3+
24	CH1_Y4-	LVDS Channel 1, Signal 4-
25	CH1_Y4+	LVDS Channel 1, Signal 4+
26	GND	Ground
27	GND	Ground
28	CH2_Y0-	LVDS Channel 2, Signal 0-
29	CH2_Y0+	LVDS Channel 2, Signal 0+
30	CH2_Y1-	LVDS Channel 2, Signal 1-
31	CH2_Y1+	LVDS Channel 2, Signal 1+
32	CH2_Y2-	LVDS Channel 2, Signal 2-

33	CH2_Y2+	LVDS Channel 2, Signal 2+
34	GND	Ground
35	CH2_CLK-	LVDS Channel 2, Clock -
36	CH2_CLK+	LVDS Channel 2, Clock +
37	GND	Ground
38	CH2_Y3-	LVDS Channel 2, Signal 3-
39	CH2_Y3+	LVDS Channel 2, Signal 3+
40	CH2_Y4-	LVDS Channel 2, Signal 4-
41	CH2_Y4+	LVDS Channel 2, Signal 4+
42	N.C.	No connection
43	N.C.	No connection
44	GND	Ground
45	GND	Ground
46	GND	Ground
47	N.C.	No connection
48	V_{DD}	Power Supply, +12V DC Regulated
49	V_{DD}	Power Supply, +12V DC Regulated
50	V_{DD}	Power Supply, +12V DC Regulated
51	V_{DD}	Power Supply, +12V DC Regulated

Note: N.C. : please leave this pin unoccupied. It can not be connected by any signal (Low/GND/High).

LVDS Option for 8bit

- **LVDS Option = High/OPEN ➔NS**

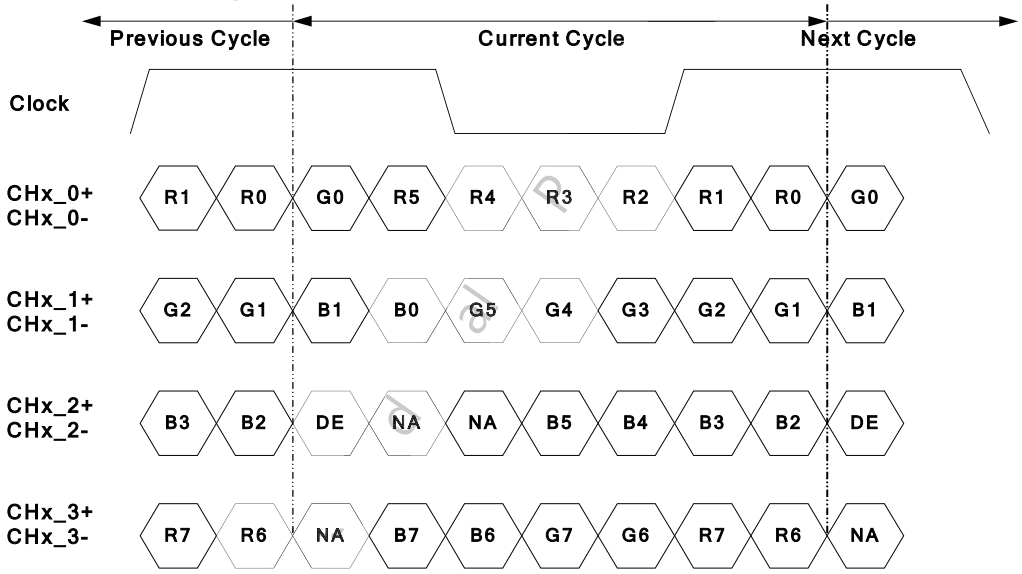

Note: x = 1, 2, 3, 4…

- **LVDS Option = Low ➔JEIDA**

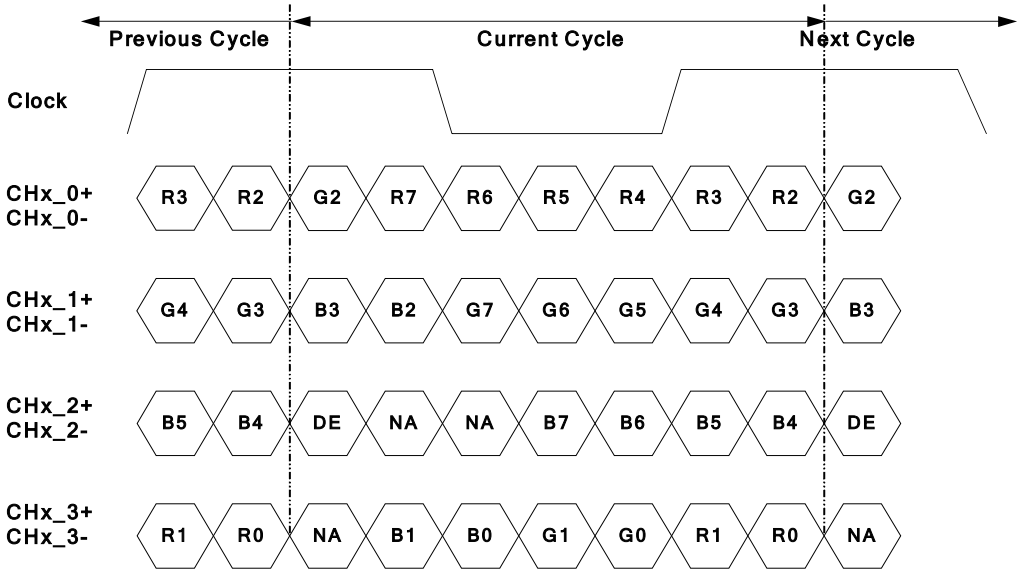

Note: x = 1, 2, 3, 4…

LVDS Option for 10bit

- **LVDS Option NS**

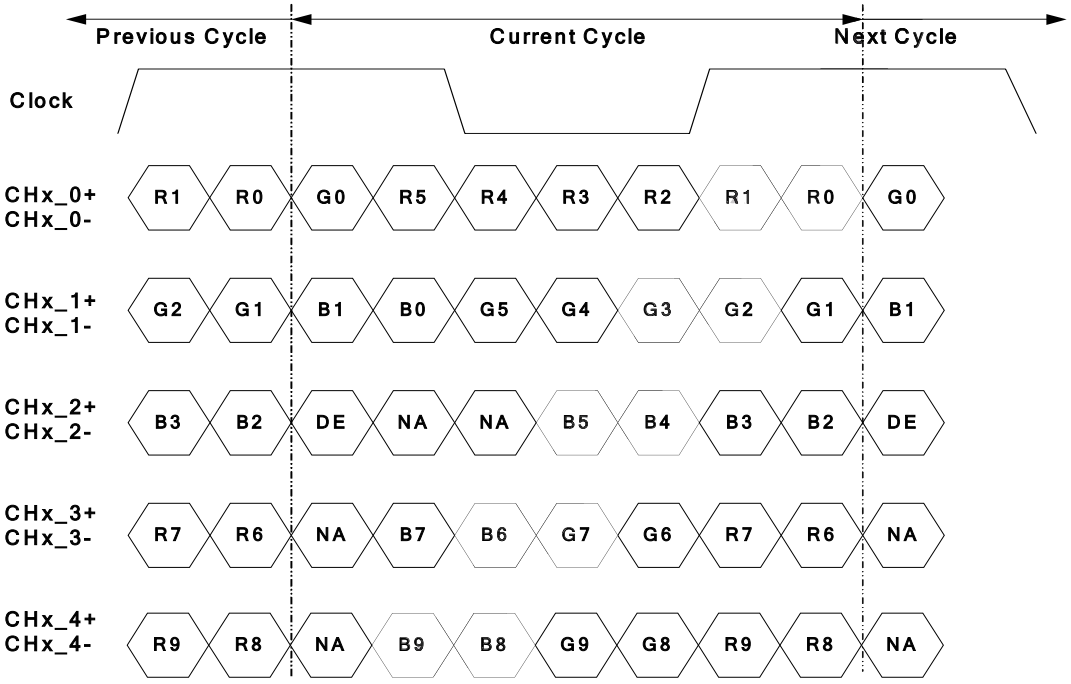

Note: x = 1, 2, 3, 4…

■ LVDS Option JEIDA

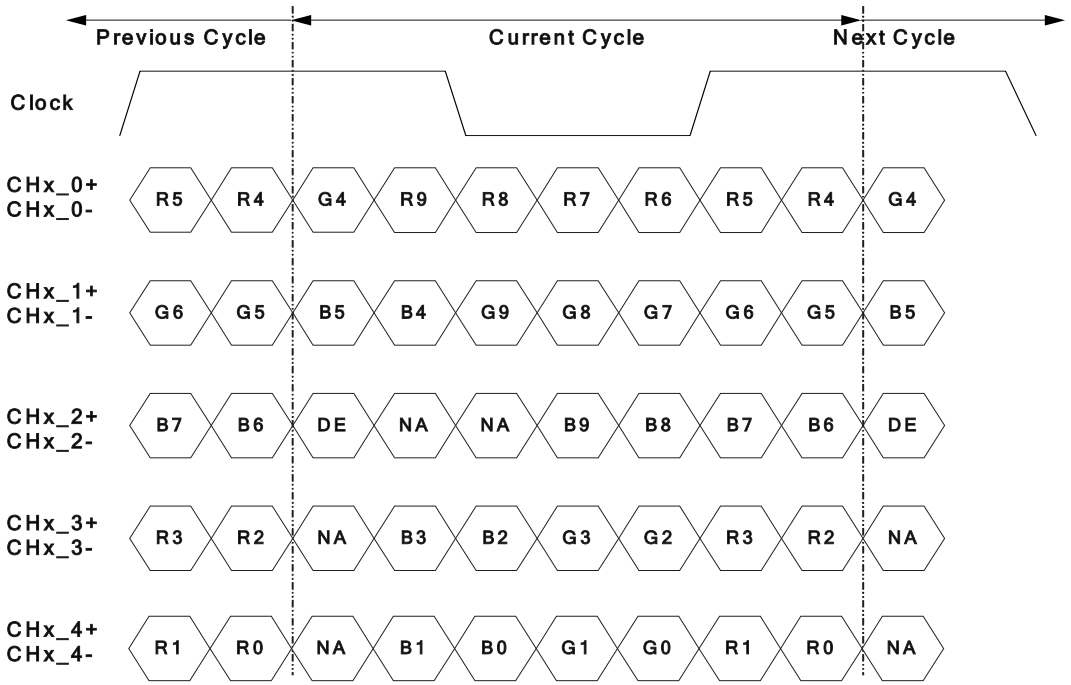

Note: x = 1, 2, 3, 4…

3.3 Signal Timing Specification

This is the signal timing required at the input of the user connector. All of the interface signal timing should be satisfied with the following specifications for its proper operation.

Timing Table (DE only Mode)

Signal	Item	Symbol	Min.	Typ.	Max	Unit
Vertical Section	Period	Tv	1100	1125	1480	Th
	Active	Tdisp (v)		1080		
	Blanking	Tblk (v)	20	45	400	Th
Horizontal Section	Period	Th	1030	1100	1325	Tclk
	Active	Tdisp (h)		960		
	Blanking	Tblk (h)	70	140	365	Tclk
Clock	Frequency	Fclk=1/Tclk	53	74.25	82	MHz
Vertical Frequency	Frequency	Fv	47	60	63	Hz
Horizontal Frequency	Frequency	Fh	60	67.5	73	KHz

Notes:

(1) Display position is specific by the rise of DE signal only.
Horizontal display position is specified by the rising edge of 1st DCLK after the rise of 1st DE, is displayed on the left edge of the screen.

(2)Vertical display position is specified by the rise of DE after a “Low” level period equivalent to eight times of horizontal period. The 1st data corresponding to one horizontal line after the rise of 1st DE is displayed at the top line of screen.

(3)If a period of DE “High” is less than 1920 DCLK or less than 1080 lines, the rest of the screen displays black.

(4)The display position does not fit to the screen if a period of DE “High” and the effective data period do not synchronize with each other.

3.4 Signal Timing Waveforms

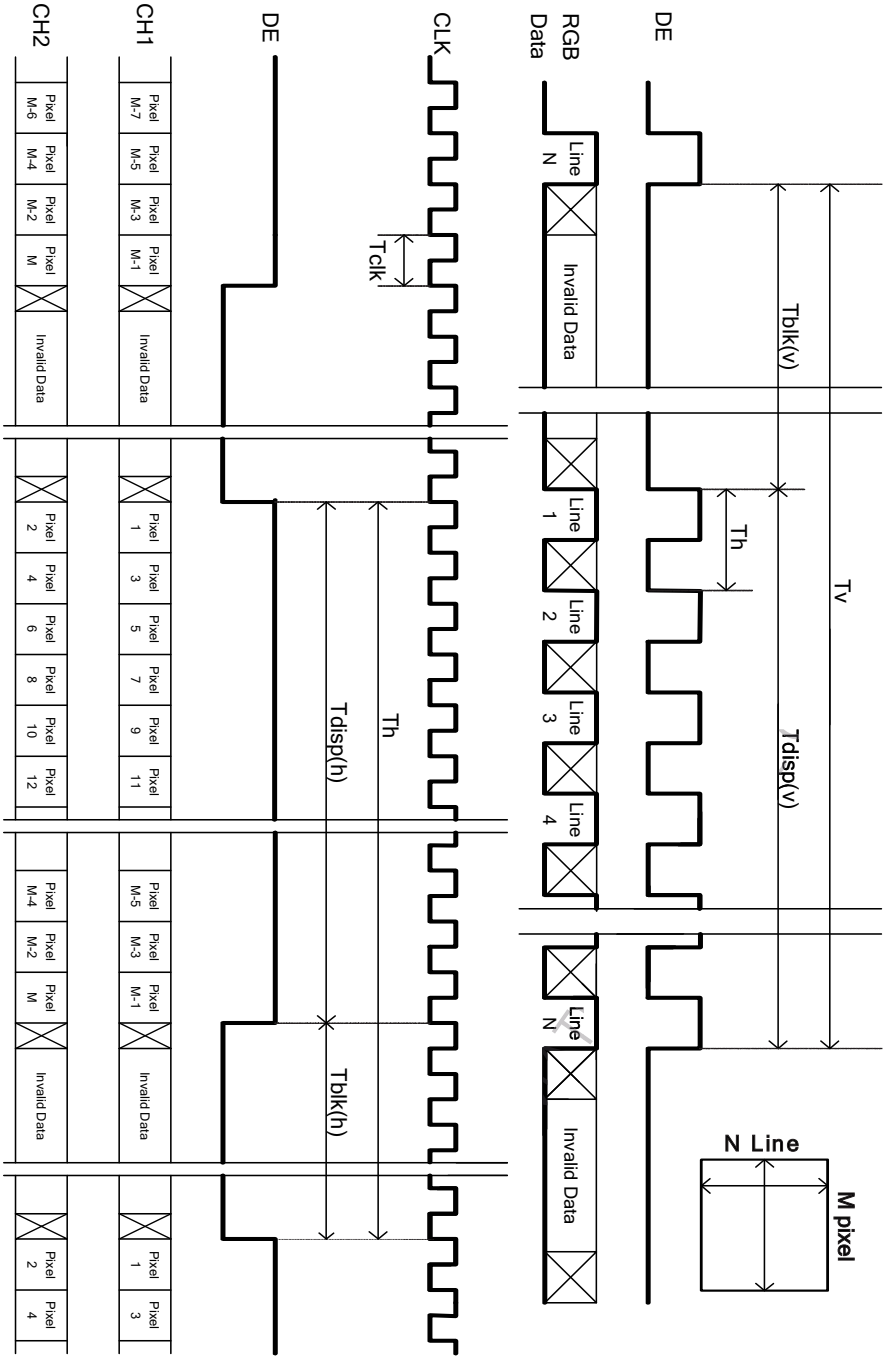

3.5 Color Input Data Reference

The brightness of each primary color (red, green and blue) is based on the 8 bit gray scale data input for the color; the higher the binary input, the brighter the color. The table below provides a reference for color versus data input.

COLOR DATA REFERENCE

Color		Input Color Data																							
		RED								GREEN								BLUE							
		MSB							LSB	MSB							LSB	MSB							LSB
		R7	R6	R5	R4	R3	R2	R1	R0	G7	G6	G5	G4	G3	G2	G1	G0	B7	B6	B5	B4	B3	B2	B1	B0
Basic Color	Black	0	0	0	0	0	0	0	0	0	0	0	0	0	0	0	0	0	0	0	0	0	0	0	0
	Red(255)	1	1	1	1	1	1	1	1	0	0	0	0	0	0	0	0	0	0	0	0	0	0	0	0
	Green(255)	0	0	0	0	0	0	0	0	1	1	1	1	1	1	1	1	0	0	0	0	0	0	0	0
	Blue(255)	0	0	0	0	0	0	0	0	0	0	0	0	0	0	0	0	1	1	1	1	1	1	1	1
	Cyan	0	0	0	0	0	0	0	0	1	1	1	1	1	1	1	1	1	1	1	1	1	1	1	1
	Magenta	1	1	1	1	1	1	1	1	0	0	0	0	0	0	0	0	1	1	1	1	1	1	1	1
	Yellow	1	1	1	1	1	1	1	1	1	1	1	1	1	1	1	1	0	0	0	0	0	0	0	0
	White	1	1	1	1	1	1	1	1	1	1	1	1	1	1	1	1	1	1	1	1	1	1	1	1
R	RED(000)	0	0	0	0	0	0	0	0	0	0	0	0	0	0	0	0	0	0	0	0	0	0	0	0
	RED(001)	0	0	0	0	0	0	0	1	0	0	0	0	0	0	0	0	0	0	0	0	0	0	0	0

	RED(254)	1	1	1	1	1	1	1	0	0	0	0	0	0	0	0	0	0	0	0	0	0	0	0	0
	RED(255)	1	1	1	1	1	1	1	1	0	0	0	0	0	0	0	0	0	0	0	0	0	0	0	0
G	GREEN(000)	0	0	0	0	0	0	0	0	0	0	0	0	0	0	0	0	0	0	0	0	0	0	0	0
	GREEN(001)	0	0	0	0	0	0	0	0	0	0	0	0	0	0	0	1	0	0	0	0	0	0	0	0

	GREEN(254)	0	0	0	0	0	0	0	0	1	1	1	1	1	1	1	0	0	0	0	0	0	0	0	0
	GREEN(255)	0	0	0	0	0	0	0	0	1	1	1	1	1	1	1	1	0	0	0	0	0	0	0	0
B	BLUE(000)	0	0	0	0	0	0	0	0	0	0	0	0	0	0	0	0	0	0	0	0	0	0	0	0
	BLUE(001)	0	0	0	0	0	0	0	0	0	0	0	0	0	0	0	0	0	0	0	0	0	0	0	1

	BLUE(254)	0	0	0	0	0	0	0	0	0	0	0	0	0	0	0	0	1	1	1	1	1	1	1	0
	BLUE(255)	0	0	0	0	0	0	0	0	0	0	0	0	0	0	0	0	1	1	1	1	1	1	1	1

3.6 Power Sequence for LCD

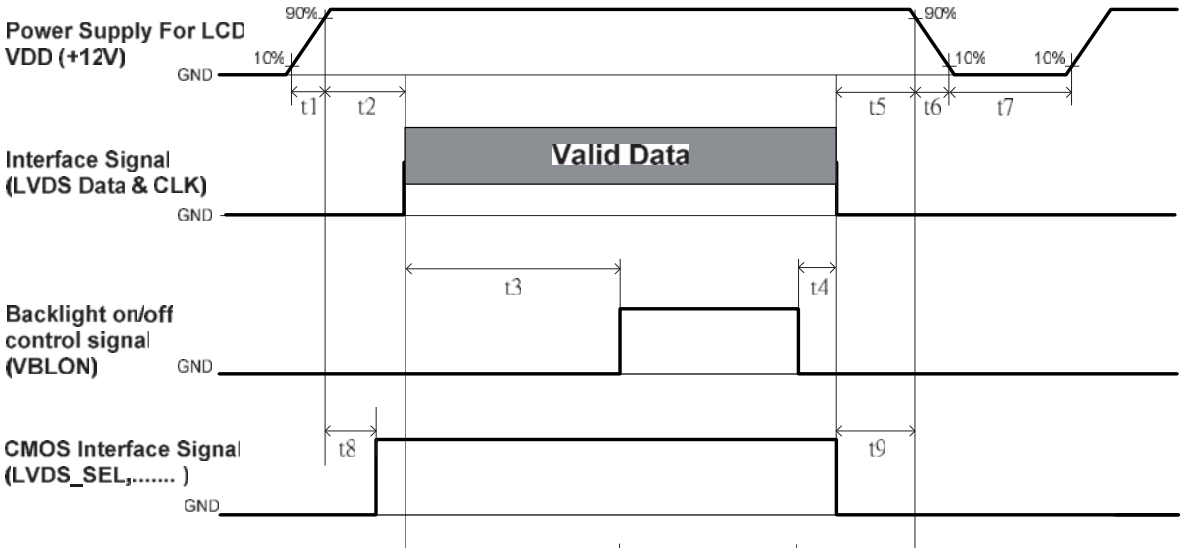

Parameter	Values			Unit
	Min.	Type.	Max.	
t1	0.4	---	30	ms
t2	0.1	---	50	ms
t3	450	---	---	ms
t4	0*1	---	---	ms
t5	0	---	---	ms
t6	---	---	---*2	ms
t7	500	---	---	ms
t8	20*3	---	50	ms
t9	0	---	---	ms

Note:

(1) t4=0 : concern for residual pattern before BLU turn off.

(2) t6 : voltage of VDD must decay smoothly after power-off. (customer system decide this value)

(3) When CMOS Interface signal is N.C. (no connection), opened in Transmitted end, t8 timing spec can be negligible.

3.7 Backlight Specification

3.7.1 Electrical specification (Ta = 25 ± 2 ℃)

	Item	Symbol		Condition	Spec			Unit	Note
					Min	Typ	Max		
1	Input Voltage	VDDB		-	22.8	24	25.2	VDC	-
2	Input Current	I_{DDB}		VDDB=24V		3.2	3.7	ADC	1
3	Input Power	P_{DDB}		VDDB=24V		76.8	93.24	W	1
4	Inrush Current	I_{RUSH}		VDDB=24V			4.51	ADC	2
5	On/Off control voltage	V_{BLON}	ON	VDDB=24V	2	3.3	5.5	VDC	-
			OFF		0	0.8	0.8		-
6	On/Off control current	I_{BLON}		VDDB=24V	-	-	1.5	mA	-
7	External PWM Control Voltage	V_EPWM	MAX	VDDB=24V	2	-	5.5	VDC	-
			MIN	VDDB=24V	0	-	0.8		-
8	External PWM Control Current	I_EPWM		VDDB=24V	-	-	2	mADC	-
9	External PWM Duty ratio	D_EPWM		VDDB=24V	5	-	100	%	3
10	External PWM Frequency	F_EPWM		VDDB=24V	90	180	240	Hz	-
11	DET status signal	DET	HI	VDDB=24V	Open Collector			VDC	4
			Lo		-	0.8	0.8	VDC	4
12	Input Impedance	Rin		VDDB=24V	300			Kohm	-

Note 1 : Dimming ratio= 100% (MAX)（Ta=25±5□, Turn on for 45minutes）
Note 2: Measurement condition Rising time = 20ms (VDDB : 10%~90%);
Note 3: Less than 5% dimming control is functional well and no backlight shutdown happened
Note 4: Normal : 0~0.8V ; Abnormal : Open collector

3.7.2 Input Pin Assignment

LED driver board connector: Cvilux CI0114M1HRL-NH or equivalent

Pin	Symbol	Description
1	VDDB	Operating Voltage Supply, +24V DC regulated
2	VDDB	Operating Voltage Supply, +24V DC regulated
3	VDDB	Operating Voltage Supply, +24V DC regulated
4	VDDB	Operating Voltage Supply, +24V DC regulated
5	VDDB	Operating Voltage Supply, +24V DC regulated
6	BLGND	Ground and Current Return
7	BLGND	Ground and Current Return
8	BLGND	Ground and Current Return
9	BLGND	Ground and Current Return
10	BLGND	Ground and Current Return
11	DET	BLU status detection: Normal : 0~0.8V ; Abnormal : Open collector (Recommend Pull high R > 10K, VDD = 3.3V)
12	VBLON	BLU On-Off control: High/Open (2~5.5V) : BL On ; Low (0~0.8V/GND) : BL Off
13	NC	NC
14	PDIM(*)	External PWM (5%~100% Duty, open for 100%)

(Note*) IF External PWM function includes 5% dimming ratio. Judge condition as below:
(1) Backlight module must be lighted ON normally.
(2) All protection function must work normally
Uniformity and flicker could NOT be guaranteed

3.7.3 Power Sequence for Backlight

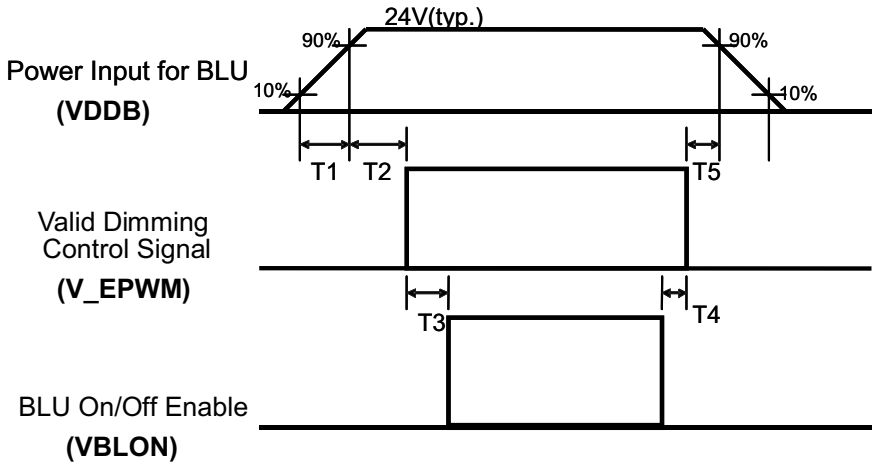

Dip condition

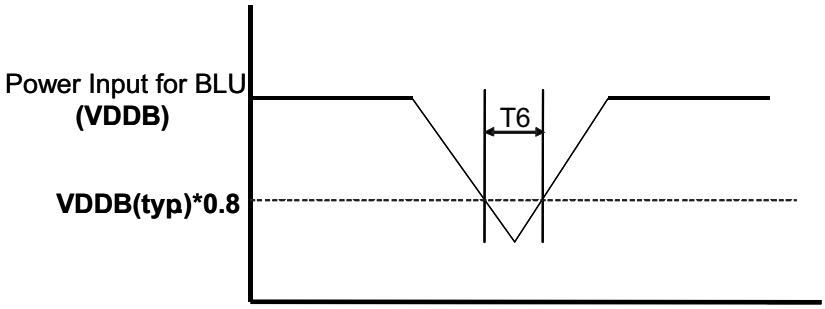

Parameter	Value			Units
	Min	Typ	Max	
T1	20	-	-	ms
T2	250	-	-	ms
T3	200			ms
T4	0	-	-	ms
T5	0	-	-	ms
T6		-	1000	ms*1

Note:1. T6 describes VDDB dip condition and VDDB couldn't lower than 10% VDDB.

4. Optical Specification

Optical characteristics are determined on the back-light of measured unit is 'ON' and stabilized after 45~60 minutes in a dark environment at 25°C. The values are specified at 50cm distance from the LCD surface at a viewing angle of φ and θ equal to 0°.

Fig.1 presents additional information concerning the measurement equipment and method.

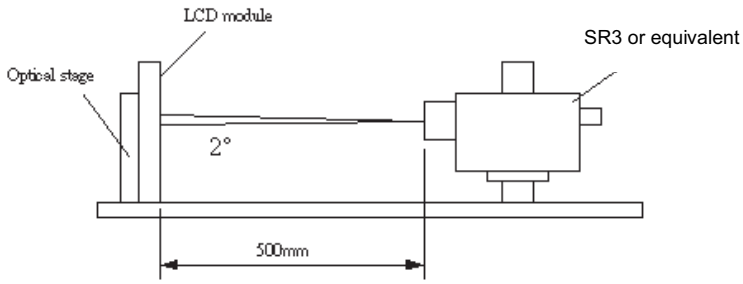

Parameter		Symbol	Values			Unit	Notes
			Min.	Typ.	Max		
Contrast Ratio		CR	2400	3000	--		1
Surface Luminance (White)		L_{WH} (2D)	800	1000	--	cd/m^2	2
Luminance Variation		$\delta_{WHITE(9P)}$	--	--	1.33		3
Response Time (G to G)		Tγ	--	8	10	ms	4
Color Gamut		NTSC		72		%	
Color Coordinates							
	Red	R_X	Typ.-0.03	0.652 (TBD)	Typ.+0.03		
		R_Y		0.332 (TBD)			
	Green	G_X		0.300 (TBD)			
		G_Y		0.623 (TBD)			
	Blue	B_X		0.150 (TBD)			
		B_Y		0.065 (TBD)			
	White	W_X		0.28			
		W_Y		0.29			
Viewing Angle							5
	x axis, right(φ=0°)	θ_r	--	89	--	degree	
	x axis, left(φ=180°)	θ_l	--	89	--	degree	
	y axis, up(φ=90°)	θ_u	--	89	--	degree	
	y axis, down (φ=270°)	θ_d	--	89	--	degree	

Note:

1. Contrast Ratio (CR) is defined mathematically as:

$$\textbf{Contrast Ratio}=\frac{\textbf{Surface Luminance of } L_{on5}}{\textbf{Surface Luminance of } L_{off5}}$$

2. Surface luminance is luminance value at point 5 across the LCD surface 50cm from the surface with all pixels displaying white. From more information see FIG 2. LED current I_F = typical value (without driver board), LED input VDDB =24V, I_{DDB}. = Typical value (with driver board), L_{WH}=Lon5 where Lon5 is the luminance with all pixels displaying white at center 5 location.
3. The variation in surface luminance, δWHITE is defined (center of Screen) as:

   $\delta_{WHITE(9P)}$= Maximum(L_{on1}, L_{on2},…,L_{on9})/ Minimum(L_{on1}, L_{on2},…L_{on9})
4. Response time T_γ is the average time required for display transition by switching the input signal for five luminance ratio (0%,25%,50%,75%,100% brightness matrix) and is based on F_v=60Hz to optimize.

Measured Response Time		Target				
		0%	**25%**	**50%**	**75%**	**100%**
Start	**0%**		0% to 25%	0% to 50%	0% to 75%	0% to 100%
	25%	25% to 0%		25% to 50%	25% to 75%	25% to 100%
	50%	50% to 0%	50% to 25%		50% to 75%	50% to 100%
	75%	75% to 0%	75% to 25%	75% to 50%		75% to 100%
	100%	100% to 0%	100% to 25%	100% to 50%	100% to 75%	

T_γ is determined by 10% to 90% brightness difference of rising or falling period. (As illustrated)

The response time is defined as the following figure and shall be measured by switching the input signal for "any level of gray(bright) " and "any level of gray(dark)".

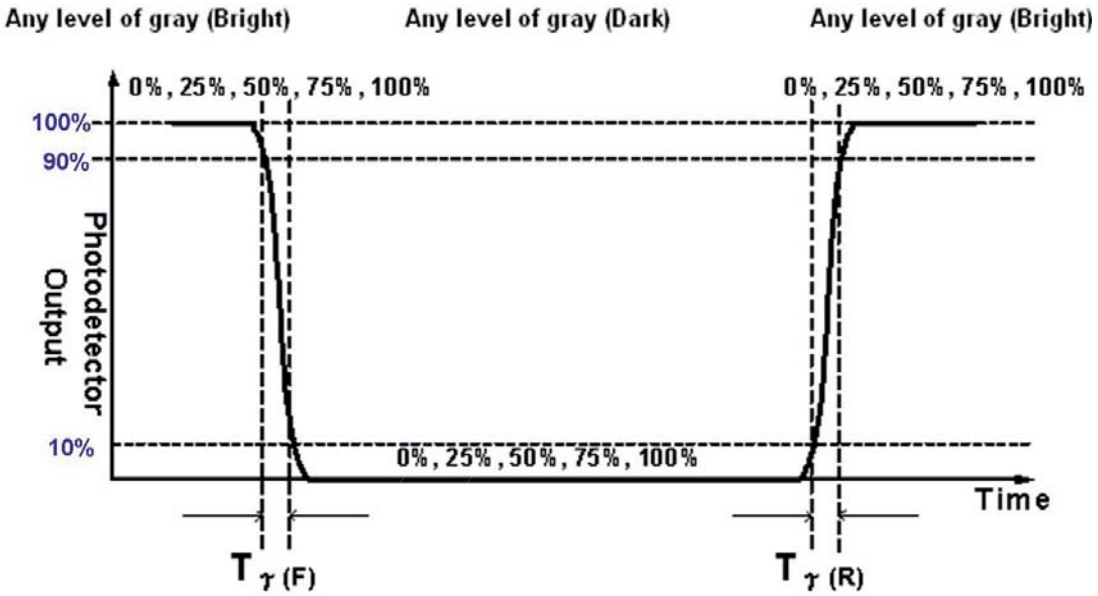

FIG. 2 Luminance

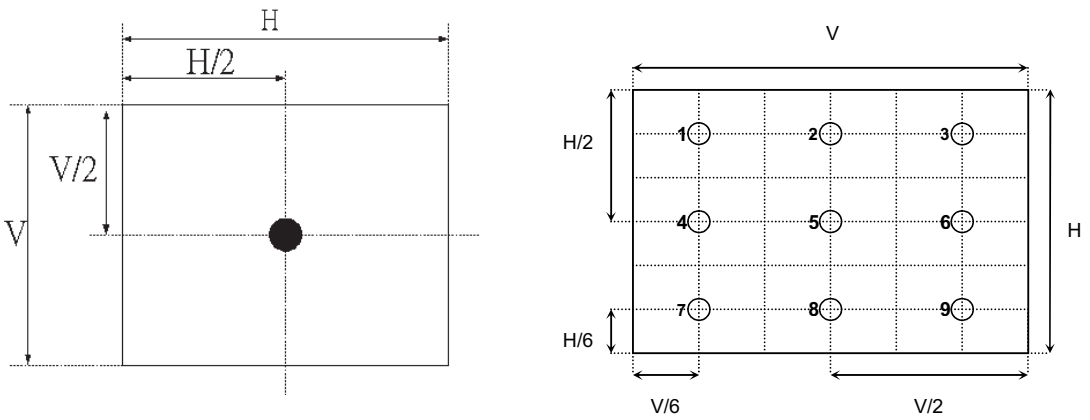

5. Viewing angle is the angle at which the contrast ratio is greater than 10. The angles are determined for the horizontal or x axis and the vertical or y axis with respect to the z axis which is normal to the LCD surface. For more information see FIG3.

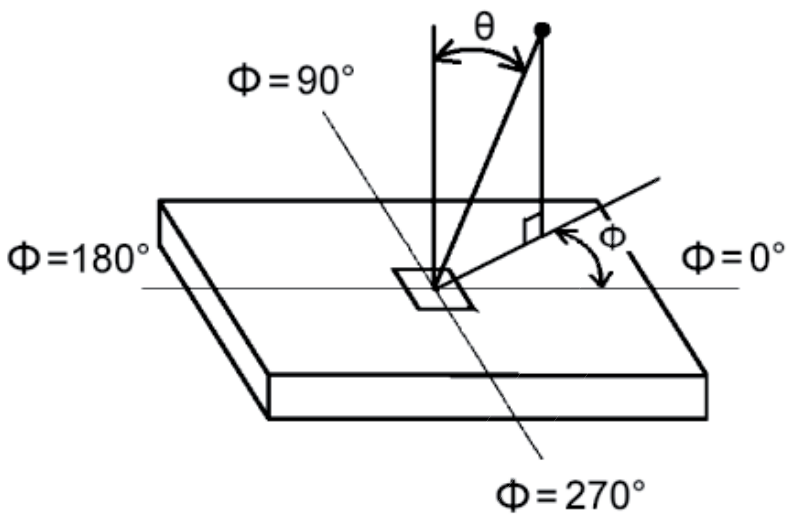

5. Mechanical Characteristics

The contents provide general mechanical characteristics for the model **S320HVM03** In addition the figures in the next page are detailed mechanical drawing of the LCD.

Item		Dimension	Unit	Note
Outline Dimension	Horizontal	719.2	mm	
	Vertical	413.7	mm	
	Depth (Dmin)	10.8	mm	front bezel to back bezel
	Depth (Dmax)	27.4	mm	to DB Cover
Weight	4910		G	w/ DB

5.1 Placement Suggestions

1. Landscape Mode: The default placement is T-Con Side on the lower side and the image is shown upright via viewing from the front.

(Front view)

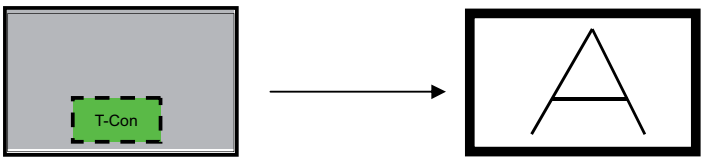

2. Portrait Mode: The default placement is that T-Con side has to be placed on the left side via viewing from the front.

(Front view)

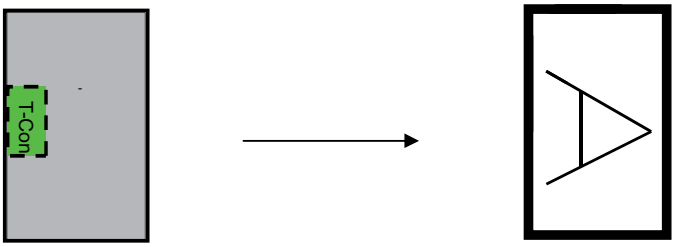

Front View

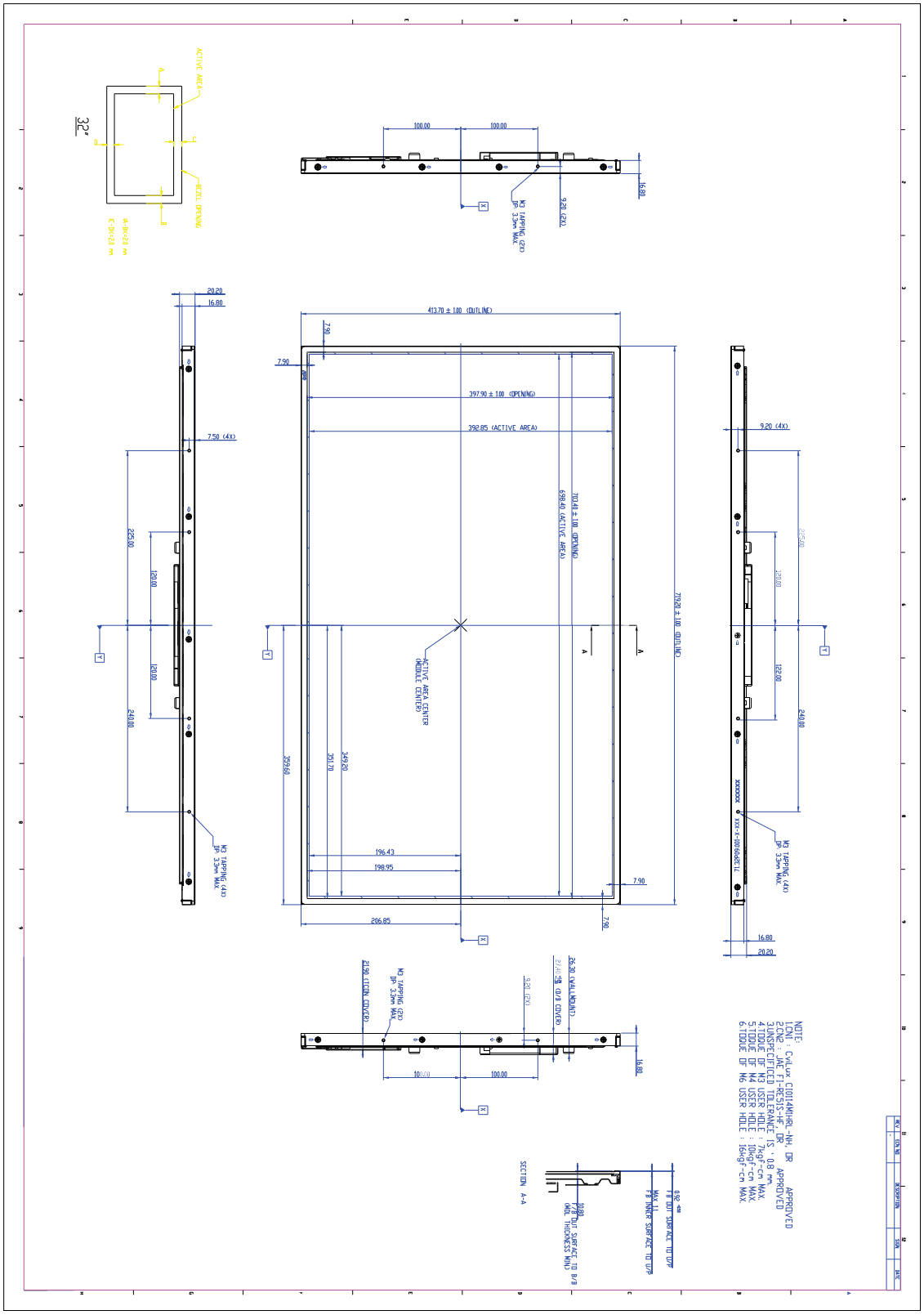
32"
ACTIVE AREA
BEZEL OPENING
NOTE:
1.CN1 : CviLux CJ01W4HRL-NH DR APPROVED
2.CN2 : JAE FI-RE51S-HF, DR APPROVED
3.UNSPECIFICED TOLERANCE IS ±0.8 mm
4.TORQUE OF M3 USER HOLE : 7kgf-cm MAX.
5.TORQUE OF M4 USER HOLE : 10kgf-cm MAX.
6.TORQUE OF M6 USER HOLE : 16kgf-cm MAX.
SECTION A-A

Back View 1

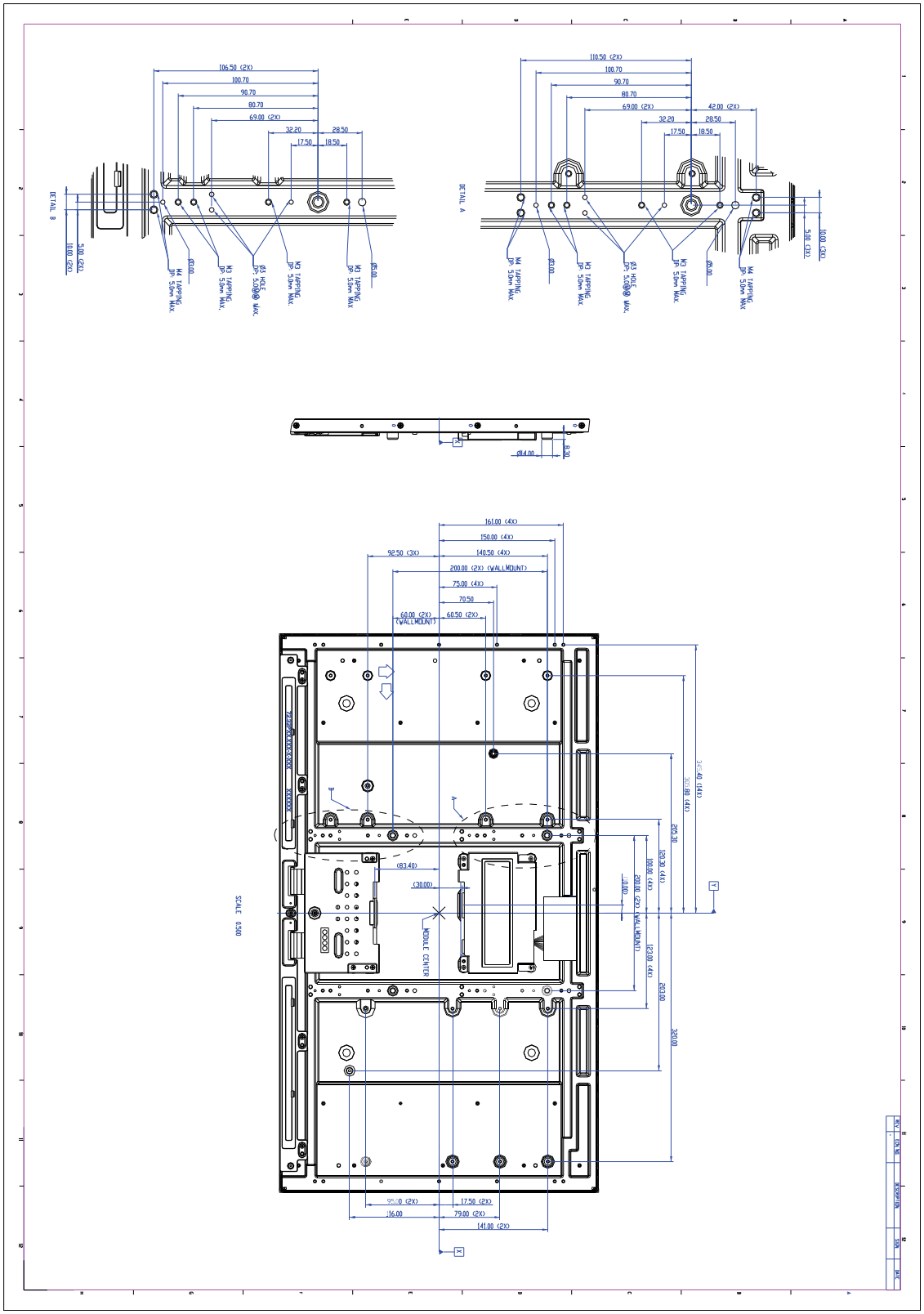
DETAIL B
DETAIL A
SCALE 0.500
MODULE CENTER
(WALLMOUNT)
M4 TAPPING DP. 5.0mm MAX.
M3 TAPPING DP. 5.0mm MAX.
ø3.5 HOLE DP. 5.0@@ MAX.
ø3.00
ø4.00
8.00
106.50 (2X)
100.70
90.70
80.70
69.00 (2X)
32.20
28.50
17.50
18.50
42.00 (2X)
10.00 (2X)
5.00 (2X)
161.00 (4X)
150.00 (4X)
140.50 (4X)
92.50 (3X)
200.00 (2X) (WALLMOUNT)
75.00 (4X)
70.50
60.50 (2X)
60.00 (2X) (WALLMOUNT)
(83.40)
(30.00)
345.40 (MAX)
302.80 (4X)
205.30
132.30 (4X)
100.00 (4X)
200.00 (2X) (WALLMOUNT)
123.00 (4X)
203.00
300.00
10.00
95.00 (2X)
17.50 (2X)
116.00
79.00 (2X)
141.00 (2X)

Back View 2

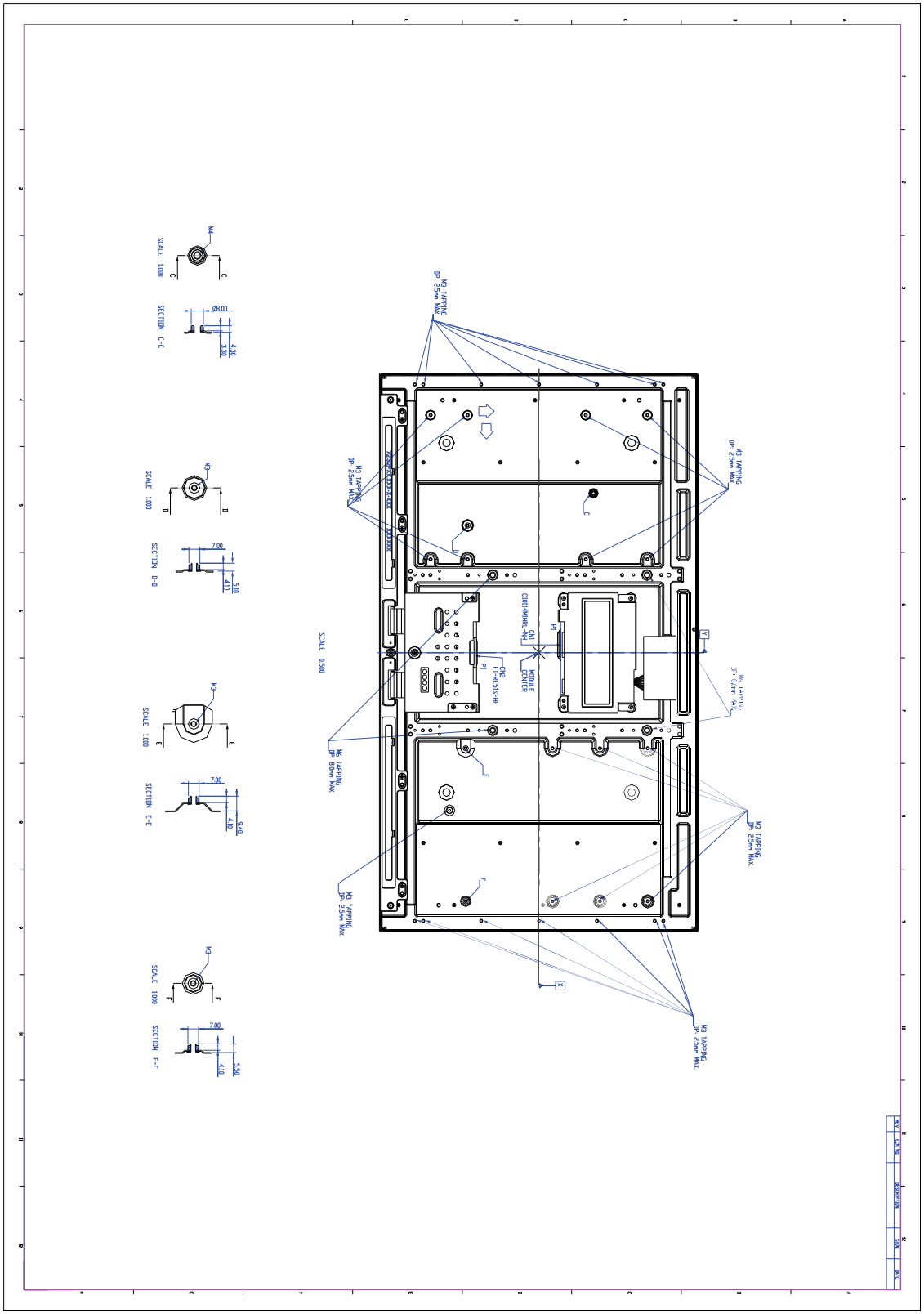
M3 TAPPING
DP 2.5mm MAX.
M3 TAPPING
DP 6.0mm MAX.
M3 TAPPING
DP 4.0mm MAX.
CN1
C101-040-MC-MAL
MODULE
CENTER
CN2
F1-RES15-HF
P1
SCALE 0.500
SECTION C-C
SECTION D-D
SECTION E-E
SECTION F-F
SCALE 1.000
M4
M3
7.00
4.10
9.40
5.50
3.30
4.30
Ø8.00

6. Reliability Test Items

	Test Item	Q'ty	Condition
1	High temperature storage test	3	60□, 500hrs
2	Low temperature storage test	3	-20□, 500hrs
3	High temperature operation test	3	50□, 500hrs
4	Low temperature operation test	3	-5□, 500hrs
5	Vibration test (non-operation)	3	Wave form: random Vibration level : 1.0G RMS Bandwidth : 10-300Hz Duration : X axis, Vertical, 10min Y axis, Vertical, 10min Z axis, Vertical, 10min one time each direction
6	Shock test (non-operation)	3	Shock level 50G ,20ms ±X,Y,Z axis Waveform: half sine wave Direction: One time each direction
7	Vibration test (With carton)	1CTN/7PCS	Random wave (1.04Grms 2~200Hz) Duration : X,Y,Z 20min per axes
8	Drop test (With carton)	1CTN/7PCS	Height: 30.5 cm (ASTMD4169-I) Sequence:1 corner, 3 edges, 6 surfaces (refer ASTM D 5276)

7. International Standard

7.1 Safety

(1) UL 60950-1; Standard for Safety of Information Technology Equipment Including electrical Business Equipment.

(2) IEC 60950-1; Standard for Safety of International Electrotechnical Commission

(3) EN 60950-1; European Committee for Electrotechnical Standardization (CENELEC), EUROPEAN STANDARD for Safety of Information Technology Equipment Including Electrical Business Equipment.

7.2 EMC

(1) ANSI C63.4 “Methods of Measurement of Radio-Noise Emissions from Low-Voltage Electrical and Electrical Equipment in the Range of 9kHz to 40GHz. “American National standards Institute(ANSI), 1992

(2) C.I.S.P.R “Limits and Methods of Measurement of Radio Interface Characteristics of Information Technology Equipment.” International Special committee on Radio Interference.

(3) EN 55022 “Limits and Methods of Measurement of Radio Interface Characteristics of Information Technology Equipment.” European Committee for Electrotechnical Standardization. (CENELEC), 1998

8.1 Packing Methods

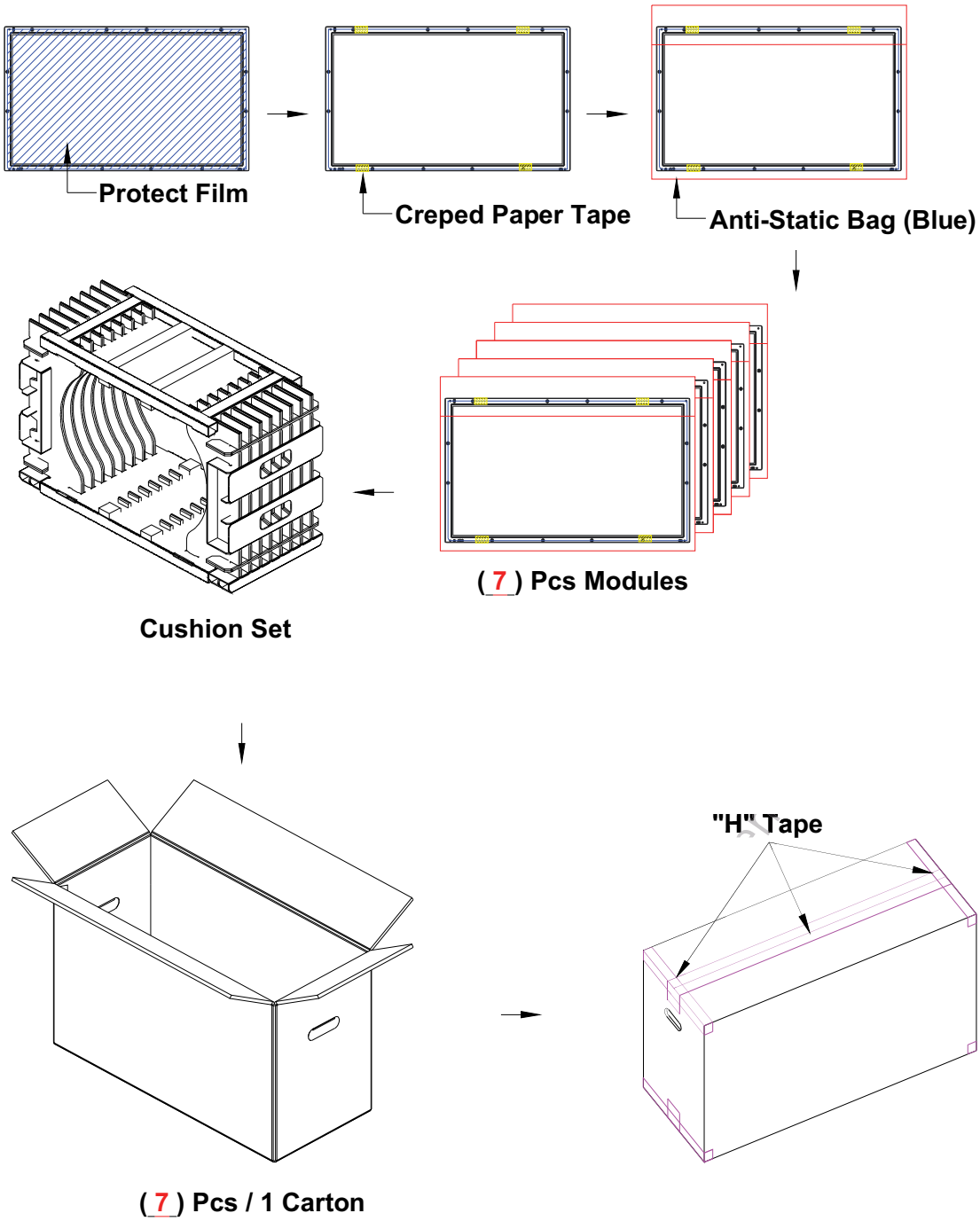

8.3 Pallet and Shipment Information

	Item	Specification			Packing Remark
		Qty.	Dimension	Weight (kg)	
1	Packing Box	7pcs/box	820(L)*376(W)*535(H)	39.47	
2	Pallet	1	1150(L)*840(W)*132(H)	15.6	
3	Boxes per Pallet	6 boxes/pallet			
4	Panels per Pallet	42 boxes/pallet			
5	Pallet after packing	42	1150(L)*840(W)*1202(H)	252.42