Preliminary

SPECIFICATION for LCM

Customer	
Model No.	VMS350GF08
Issued Date	December, 28, 2007

Any Modification of Spec is not allowed without VODATECH's permission.

SUPPLIER APPROVAL

DESIGNED	CHECKED	APPROVED
REMARKS :		

CUSTOMER APPROVAL

DESIGNED	CHECKED	APPROVED
REMARKS :		

Preliminary

[REVISION RECORD]

REV.NO.	DATE	CONTENTS	PAGE	REMARKS
00	December, 20, 2007	Initial released	All	
01	December, 28, 2007	Inspection Criteria Revision	22,23,24	

Preliminary

CONTENTS

1. **Scope**
2. **Features**
3. **General Description**
4. **Mechanical Specifications**
5. **Absolute Maximum Ratings**
6. **Electrical Characteristics**
7. **Electro – Optical Characteristics**
8. **I/O Terminals & Operating Sequence**
   - 8-1. Input Terminal Pin Assignment
   - 8-2. Input Signal, Basic Display Colors and Gray Scale of Each Colors(16M colors)
   - 8-3. Block Diagram
   - 8-4. Interface Instruction Format
   - 8-5. Electrical Specification
   - 8-6. Power on/off Sequence
9. **Quality Specifications**
   - 9-1. Acceptable Quality Level(AQL)
   - 9-2. Inspection Condition
   - 9-3. Definition of inspection zone in LCD
   - 9-4. Inspection Method
   - 9-5. Incoming Inspection Standards
10. **Reliability**
11. **General Precautions**
   - 11-1. Handling
   - 11-2. Operation
   - 11-3. Storage
12. **Dimensional Outline**
13. **Packing Specification**

1. Scope

This specification defines overall terms and inspection standards for LCD modulesupplied by VODA tech Co.,Ltd.

If the event of unexpected problems or unspecified items may occur, we will negotiate and agree to solutions with customer.

2. Features

- TMR (Transmissive With Micro Reflective) type and back-light with 6 LED's are available.
- TN(Twist Nematic) mode.
- Line inversion mode with stripe type.
- 24bits Parallel RGB Interface
- Low Power consumption.
- SYNC (Vsync,Hsync,Dotclk) mode.
- Gate Driver IC embedded on Panel(Double ASG).

3. General Description

VMS350GF08 is a color active matrix TFT liquid crystal display (LCD) that uses amorphous silicon TFT as a switching devices.

This model is composed of a TMR(Transmissive With Micro Reflective) and Negative type Main TFT-LCD Panel and a driver circuit unit.

The resolution of a 3.5" Main LCD contains 320 x 240 pixels can display up to 16M colors.

Items	Specification	Unit	Note
Display area	70.08(H) x 52.56(V)	mm	-
Driver element	a-Si TFT active matrix	-	-
Display colors	16.7M	colors	-
Number of pixels	320(H) x RGB x 240(V)	dot	-
Pixel arrangement	Stripe type	-	-
Pixel pitch	0.219(H) x 0.219(V)	mm	-
Display mode	Normally White	-	-
Viewing direction	6	o'clock	-

4. Mechanical Specifications

Item		Min.	Typ.	Max.	Unit	Note
Module size	Horizontal(H)	76.7	76.9	77.1	mm	-
	Vertical(V)	63.7	63.9	64.1	mm	(1)
	Depth(D)	3.13	3.15	3.17	mm	(1)
Weight		-	43	48	g	-

Note (1) Not include FPC.
Refer to the Outline Dimension in the "12.Outline Dimension" for further information.

5. Absolute Maximum Ratings (Ta = 25℃)

Characteristics	Symbol	Min.	Max.	Unit	Note
Digital Power supply voltage	V_{DD}	-0.3	5.0	V	-
Analog Power supply voltage	DVDD	-0.3	7.0	V	-
Gate On Voltage	V_{GH}	-0.3	22.0	V	-
Gate Off Voltage	V_{GL}	-18.5	0.3	V	-

Note 1) V_{DD} , DVDD are based on GND (0V).
Note 2) If voltage supply exceeds its absolute maximum rating , that LCM may be damaged Permanently.
It is desirable to use this LCM under electrical characteristic conditions during operating. Otherwise, this LCM may cause malfunctions or reduced reliabilities.
Note 3) 95% RH MAX. (40℃≥Ta)
Maximum wet-bulb temperature at 39℃ or less.(Ta＞40℃, No condensation)
Note 4) In case of below 0℃, the response time of liquid crystal becomes slower and the color of panel becomes darker than normal one.

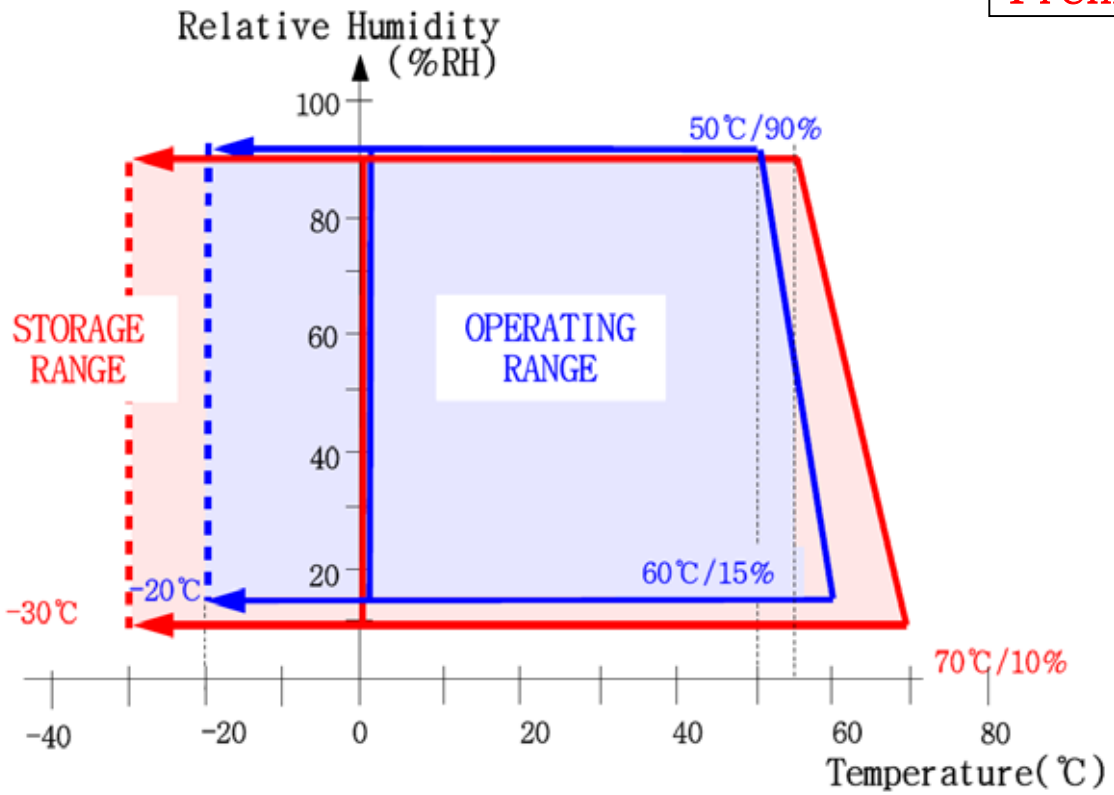

6. Electrical Characteristics

(Ta = 25℃)

Characteristics		Symbol	Min.	Typ.	Max.	Unit	Note
Digital Power supply voltage		V_{DD}	3.25	3.3	3.35	V	-
Analog Power supply voltage		DVDD	4.85	4.9	4.95	V	-
Power Dissipation	Black	P	-	40	60	mW	(1),(2) (3)
	White	P_{FULL}	-	35	50		
Gate On Voltage		V_{GH}	17.0	18.0	19.0	V	
Gate Off Voltage		V_{GL}	-11.0	-10.0	-9.0		
Frame frequency		f_{Frame}	60	75	90	Hz	-
Dot Clock		DOTCLK	-	-	10	MHz	-

Note 1) Full Black Pattern
Note 2) V_{DD} =3.3V, DVDD =5.0 V, Ta = 25℃ , F_{frame} = 75Hz , Dotclk = 7.0 Mhz
Note 3) V_{GH}-(V_{GL}X0.7) = 25V

Preliminary

7. Electro – Optical Characteristics

The following items are measured under stable conditions. The optical characteristics should be measured in a dark room or equivalent state with the methods shown in Note 6).

(Ta = 25 ± 5°C, V_{DD} = 3.3V, DVDD = 5V, I_B = 20 mA) (A)

Item		Symbol	Condition	Min.	Typ.	Max.	Unit	Note
Contrast ratio (Center point)		C/R	Note(1) Θ =0 Φ = 0 Normal Viewing Angle B/L=ON	150	300	-	-	(2) BM-5A
Luminance of white (Center point)		YL		280	-	-	cd/㎡	(7) CA-210
Uniformity		-		80	-	-	%	(6),(7) BM-7
Response time	Rising:Tr	Tr+Tf		-	25	30	msec	(3)
	Falling:Tf							
Color Gamut		S		TBD	TBD	TBD	%	(5),(7) CA-210
Color Chromaticity (CIE1931)	White	Wx		TBD	TBD	TBD	-	
		Wy		TBD	TBD	TBD		
	Red	Rx		TBD	TBD	TBD		
		Ry		TBD	TBD	TBD		
	Green	Gx		TBD	TBD	TBD		
		Gy		TBD	TBD	TBD		
	Blue	Bx		TBD	TBD	TBD		
		By		TBD	TBD	TBD		
Viewing angle	Hor.	ΘL	C/R B/L On	-	60	-	Degrees	(1),(4) BM-7
		ΘR		-	60	-		
	Ver.	ΦL		-	50	-		
		ΦH		-	55	-		

Note (A) : This condition will be changed as the evaluation circumstance of VODATECH.

Note 1) Definition of ø and Θ

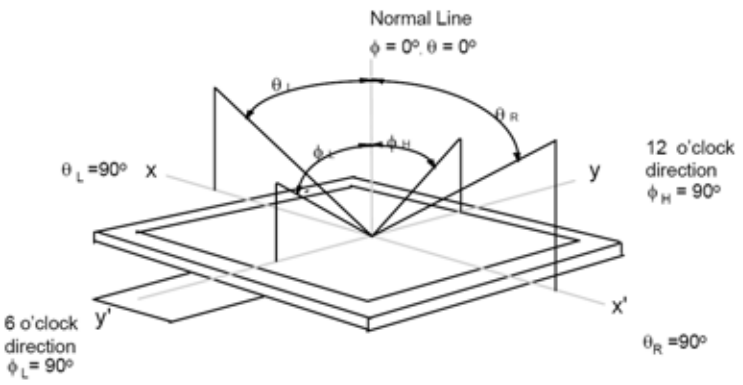

Note 2) Contrast ratio(C/R)

C/R = Luminance with all pixels white / Luminance with all pixels black

On the Panel

Note 3) Definition of response time

[Vertical]

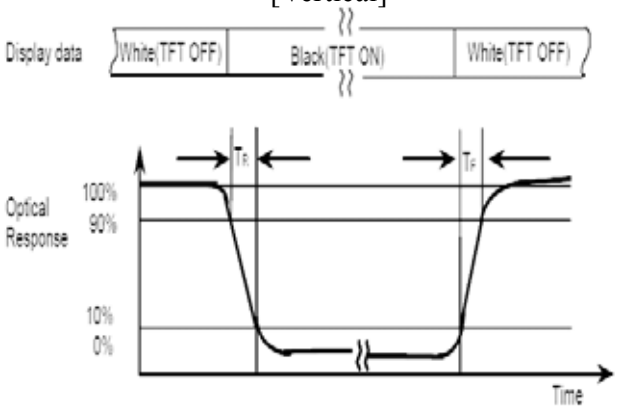

Note 4) Definition of viewing angle (Δø)

Δø= | ø1-ø2 |

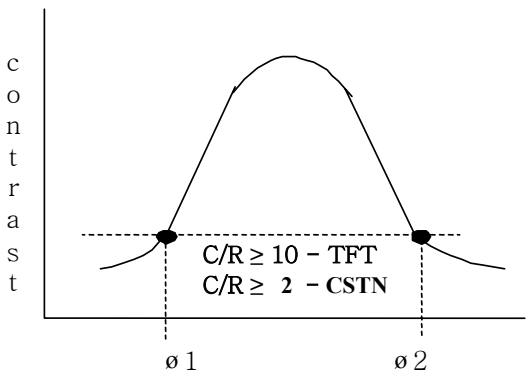

Note 5) The definition of color Gamut

Color Gamut: S(%) =

(RGB Triangle Area/NTSC Triangle Area)X100%

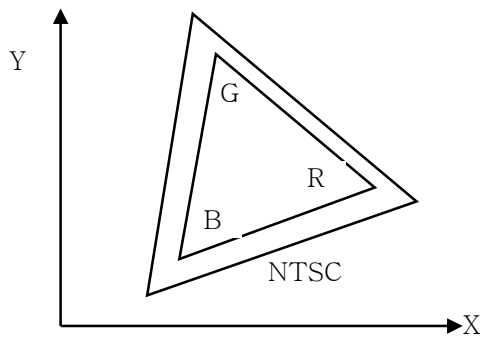

Note 6) Optical measuring system

(Temperature regulated chamber)

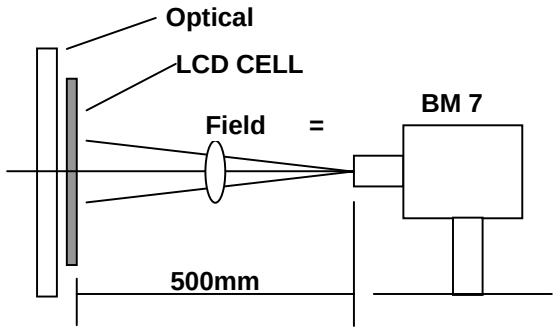

Note 7) Measurement point for luminance and luminance uniformity

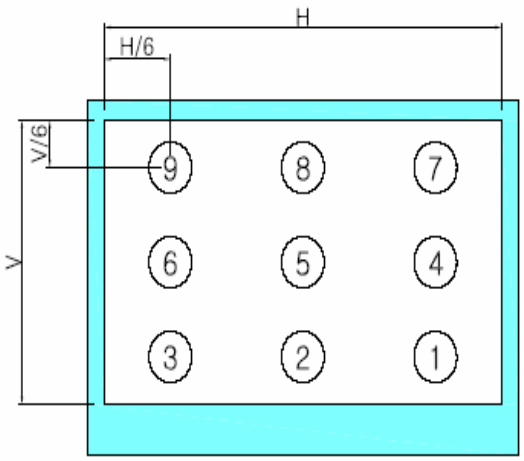

[Measurement Point for Luminance Uniformity]

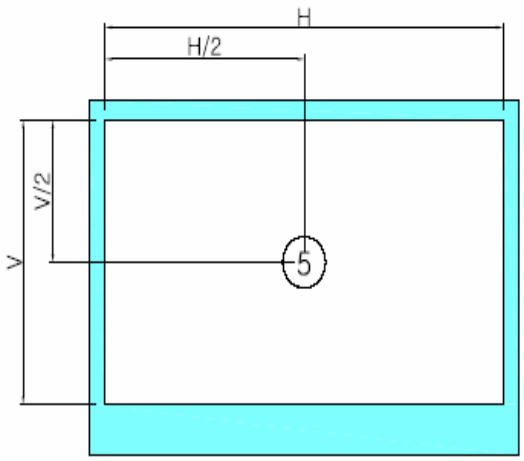

[Measurement Point for Surface Luminance]

8. I/O Terminals & Operating Sequence

Preliminary

8-1. **Input Signal & Power** (Connector : FH23-61S-0.3SH_HIROSE)

No	Symbol	Description	I/O	No	Symbol	Description	I/O
1,2	LED_Cathode	LED_Cathode	I	29	DATA11	G3	I
3.4	LED_Anode	LED_Anode	I	30	DATA12	G4	I
5	GND	Ground	I	31	DATA13	G5	I
6	X1	X_Right (used TSP)	I	32	DATA14	G6	I
7	Y1	Y_Bottom(used TSP)	I	33	DATA15	G7_(MSB)	I
8	X2	X_Left(used TSP)	I	34	DATA16	R0_(LSB)	I
9	Y2	Y_Up(used TSP)	I	35	DATA17	R1	I
10	GND	Ground	I	36	DATA18	R2	I
11	C6	Stable Capacitor Connection(1uF_10V)	O	37	DATA19	R3	I
12	C5	Stable Capacitor Connection(1uF_10V)	O	38	DATA20	R4	I
13	M	The Signal to generate Vcom	O	39	DATA21	R5	I
14	RESET	System Reset	I	40	DATA22	R6	I
15	CS	Chip select	I	41	DATA23	R7_(MSB)	I
16	SCL	Serial Clock	I	42	HSYNC	Horizental Synchronous Signal	I
17	SDI	Serial Data	I	43	VSYNC	Vertical Synchronous Signal	I
18	DATA0	B0_(LSB)	I	44	DOTCLK	Data Clock	I
19	DATA1	B1	I	45,46	DVDD	Analog Input Voltage	I
20	DATA2	B2	I	47,48	VDD	Digital Input Voltage	I
21	DATA3	B3	I	49	C4	Stable Capacitor Connection(1uF_10V)	O
22	DATA4	B4	I	50,51	VGL		I
23	DATA5	B5	I	52	C3	Stable Capacitor Connection(1uF_10V)	O
24	DATA6	B6	I	53	VGH		I
25	DATA7	B7_(MSB)	I	54	C2	Stable Capacitor Connection(1uF_10V)	O
26	DATA8	G0_(LSB)	I	55	C1	Stable Capacitor Connection(1uF_10V)	O
27	DATA9	G1	I	56,57	VCOM	VCOM Signal	I
28	DATA10	G2	I	58,59 60,61	GND	Ground	I

8-2. Input Signal, Basic Display Colors and Gray Scale of Each Colors (16M colors)

Preliminary

COLOR	DISPLAY	DATA SIGNAL																								GRAY SCALE LEVEL
		RED								GREEN								BLUE								
		R0	R1	R2	R3	R4	R5	R6	R7	G0	G1	G2	G3	G4	G5	G6	G7	B0	B1	B2	B3	B4	B5	B6	B7	
BASIC COLOR	BLACK	0	0	0	0	0	0	0	0	0	0	0	0	0	0	0	0	0	0	0	0	0	0	0	0	-
	BLUE	0	0	0	0	0	0	0	0	0	0	0	0	0	0	0	0	1	1	1	1	1	1	1	1	-
	GREEN	0	0	0	0	0	0	0	0	1	1	1	1	1	1	1	1	0	0	0	0	0	0	0	0	-
	CYAN	0	0	0	0	0	0	0	0	1	1	1	1	1	1	1	1	1	1	1	1	1	1	1	1	-
	RED	1	1	1	1	1	1	1	1	0	0	0	0	0	0	0	0	0	0	0	0	0	0	0	0	-
	MAGENTA	1	1	1	1	1	1	1	1	0	0	0	0	0	0	0	0	1	1	1	1	1	1	1	1	-
	YELLOW	1	1	1	1	1	1	1	1	1	1	1	1	1	1	1	1	0	0	0	0	0	0	0	0	-
	WHITE	1	1	1	1	1	1	1	1	1	1	1	1	1	1	1	1	1	1	1	1	1	1	1	1	-
GRAY SCALE OF RED	BLACK	0	0	0	0	0	0	0	0	0	0	0	0	0	0	0	0	0	0	0	0	0	0	0	0	R0
	DARK ↑	1	0	0	0	0	0	0	0	0	0	0	0	0	0	0	0	0	0	0	0	0	0	0	0	R1
		0	1	0	0	0	0	0	0	0	0	0	0	0	0	0	0	0	0	0	0	0	0	0	0	R2
		:	:	:	:	:	:	:	:	:	:	:	:	:	:	:	:	:	:	:	:	:	:	:	:	R3~R252
		:	:	:	:	:	:	:	:	:	:	:	:	:	:	:	:	:	:	:	:	:	:	:	:	
	↓ LIGHT	1	0	1	1	1	1	1	1	0	0	0	0	0	0	0	0	0	0	0	0	0	0	0	0	R253
		0	1	1	1	1	1	1	1	0	0	0	0	0	0	0	0	0	0	0	0	0	0	0	0	R254
	RED	1	1	1	1	1	1	1	1	0	0	0	0	0	0	0	0	0	0	0	0	0	0	0	0	R255
GRAY SCALE OF GREEN	BLACK	0	0	0	0	0	0	0	0	0	0	0	0	0	0	0	0	0	0	0	0	0	0	0	0	G0
	DARK ↑	0	0	0	0	0	0	0	0	1	0	0	0	0	0	0	0	0	0	0	0	0	0	0	0	G1
		0	0	0	0	0	0	0	0	0	1	0	0	0	0	0	0	0	0	0	0	0	0	0	0	G2
		:			:	:	:	:	:	:			:	:	:	:	:	:			:	:	:	:	:	G3~G252
		:			:	:	:	:	:	:			:	:	:	:	:	:			:	:	:	:	:	
	↓ LIGHT	0	0	0	0	0	0	0	0	1	0	1	1	1	1	1	1	0	0	0	0	0	0	0	0	G253
		0	0	0	0	0	0	0	0	0	1	1	1	1	1	1	1	0	0	0	0	0	0	0	0	G254
	GREEN	0	0	0	0	0	0	0	0	1	1	1	1	1	1	1	1	0	0	0	0	0	0	0	0	G255
GRAY SCALE OF BLUE	BLACK	0	0	0	0	0	0	0	0	0	0	0	0	0	0	0	0	0	0	0	0	0	0	0	0	B0
	DARK ↑	0	0	0	0	0	0	0	0	1	0	0	0	0	0	0	0	0	0	0	0	0	0	0	0	B1
		0	0	0	0	0	0	0	0	0	1	0	0	0	0	0	0	0	0	0	0	0	0	0	0	B2
																										B3~B252
	↓ LIGHT	0	0	0	0	0	0	0	0	1	0	1	1	1	1	1	1	0	0	0	0	0	0	0	0	B253
		0	0	0	0	0	0	0	0	0	1	1	1	1	1	1	1	0	0	0	0	0	0	0	0	B254
	BLUE	0	0	0	0	0	0	0	0	1	1	1	1	1	1	1	1	0	0	0	0	0	0	0	0	B255

Note) Definition of Gray :

Rn : Red Gray, Gn : Green Gray, Bn : Blue Gray (n = Gray level)

Input Signal : 0 = Low level voltage, 1 = High level voltage

8-3. Block Diagram

[24-bits RGB Interface]

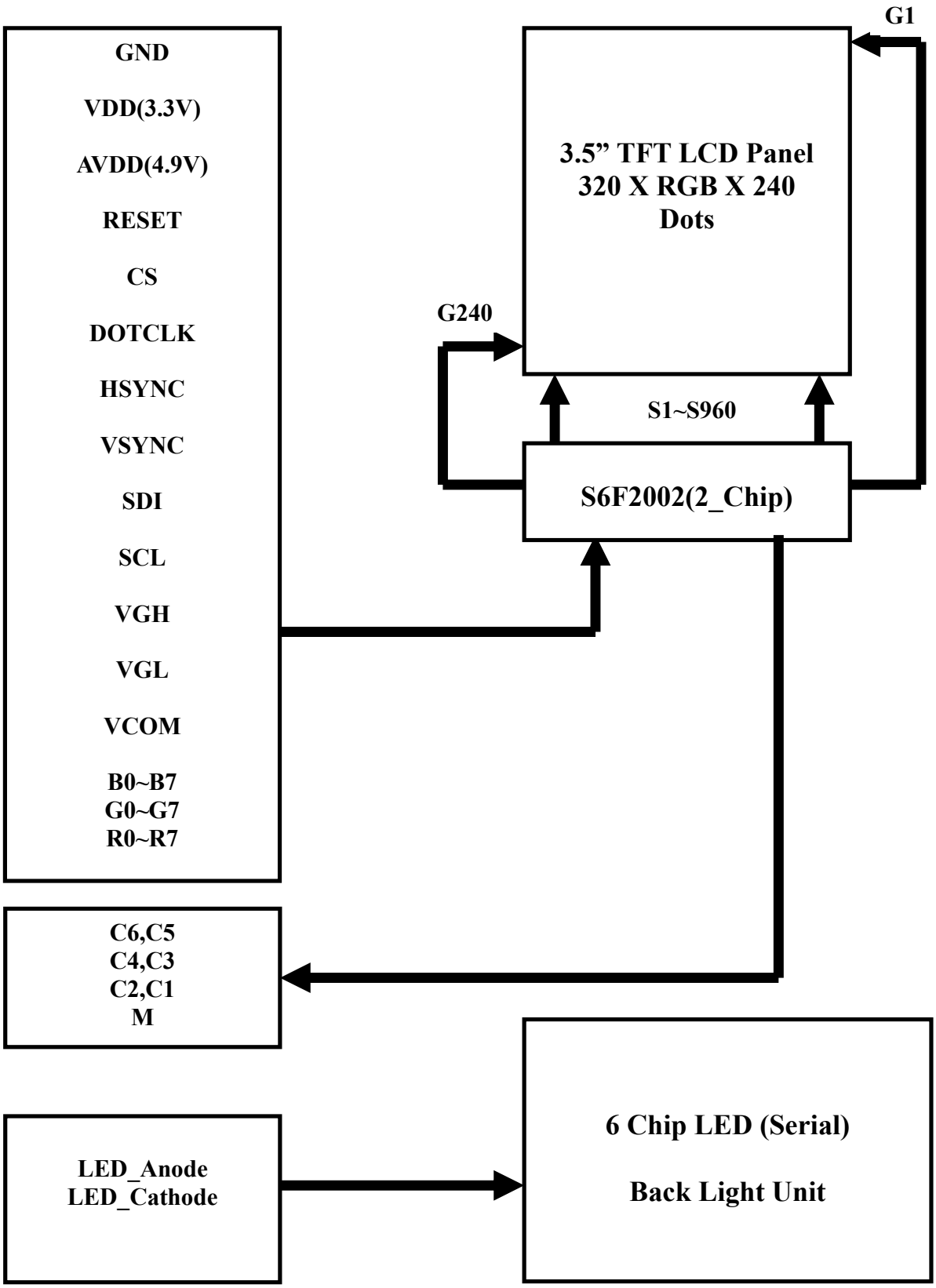

8-4. Interface Instruction Format

*** Serial Peripheral Interface**

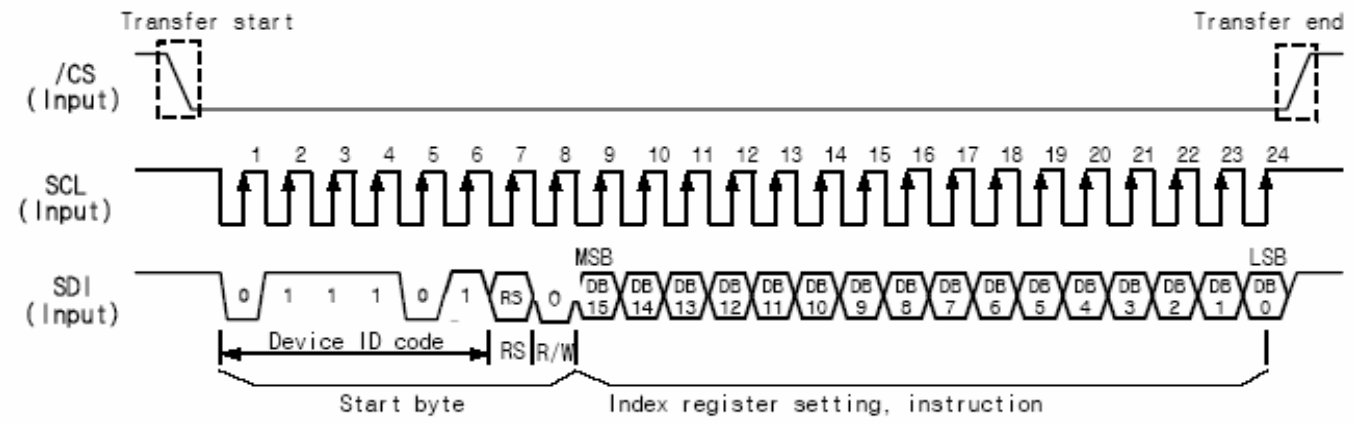

(Note) RS="0": Index data
RS="1": Instruction data

*** Data Format for 24bit RGB Interface**

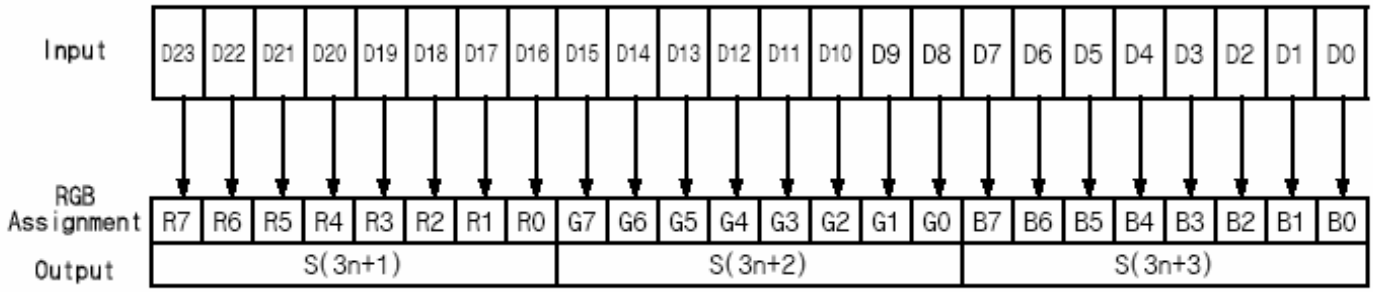

***24bit RGB Interface Timing**

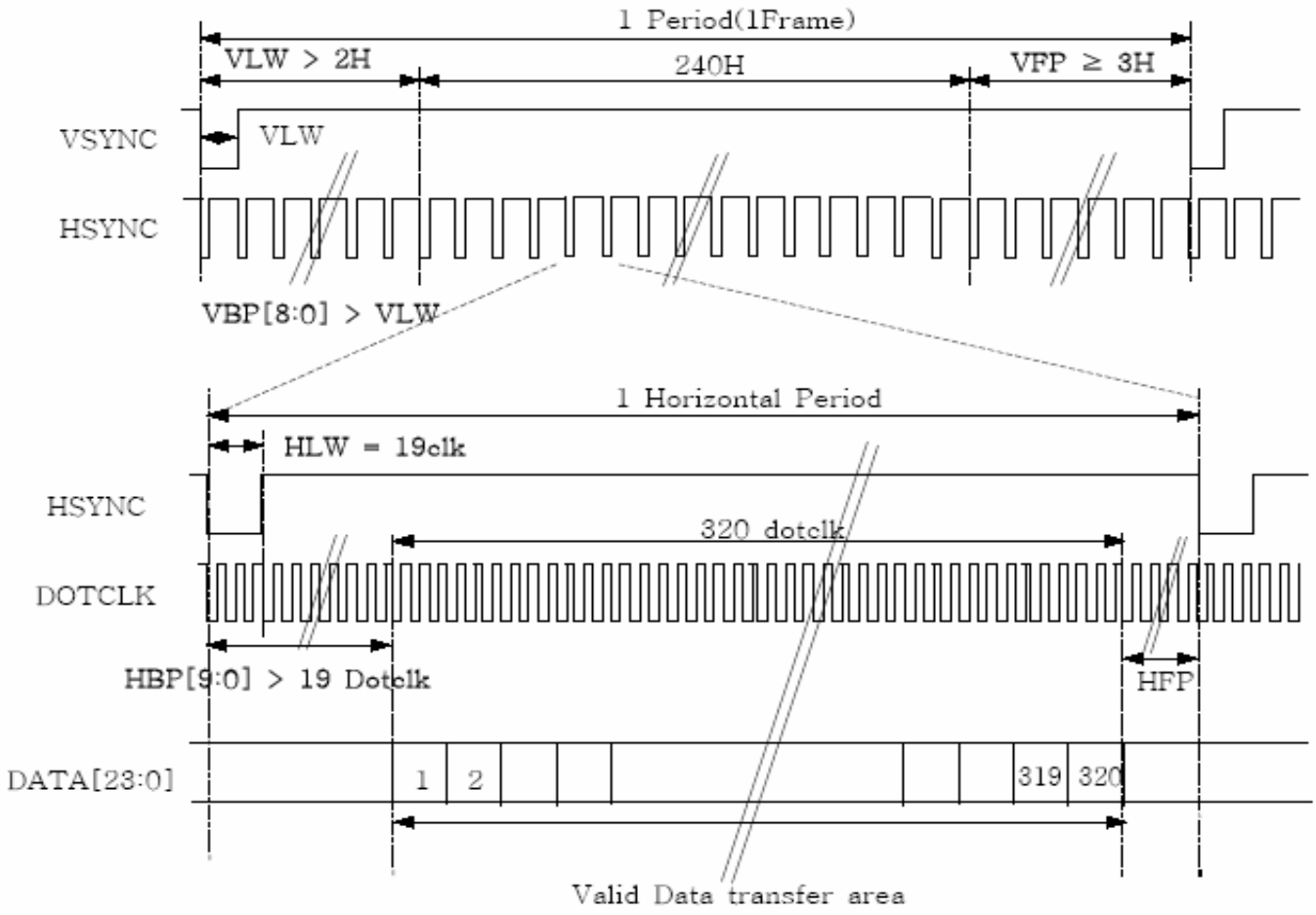

* DOTCLK = f_{frame} × (240 + VBP + VFP) × (320 + HBP + HFP)
= 75Hz × (240 + VBP + VFP) × (320 + HBP + HFP)

* 3H ≤ VFP

* HBP > HLW

* VBP > VLW

* 15clk < HLW < 20clk

* VLW > HLW

Preliminary

8-5. Electrical Specification

*** RGB Data Interface Characteristics**

(Ta = 25℃)

Characteristic	Symbol	24bit RGB Interface		Unit
		Min	Max	
DOTCLK cycle time	tDCYC	100	-	ns
DOTCLK rise/fall time	tR,tF	-	10	
DOTCLK Pulse width high	tDCHW	50	-	
DOTCLK Pulse width low	tDCLW	50	-	
SYNC setup time	tSYS	30	-	
SYNC hold time	tSYH	30	-	
PD data setup time	tPDS	30	-	
PD data hold time	tPDH	30	-	

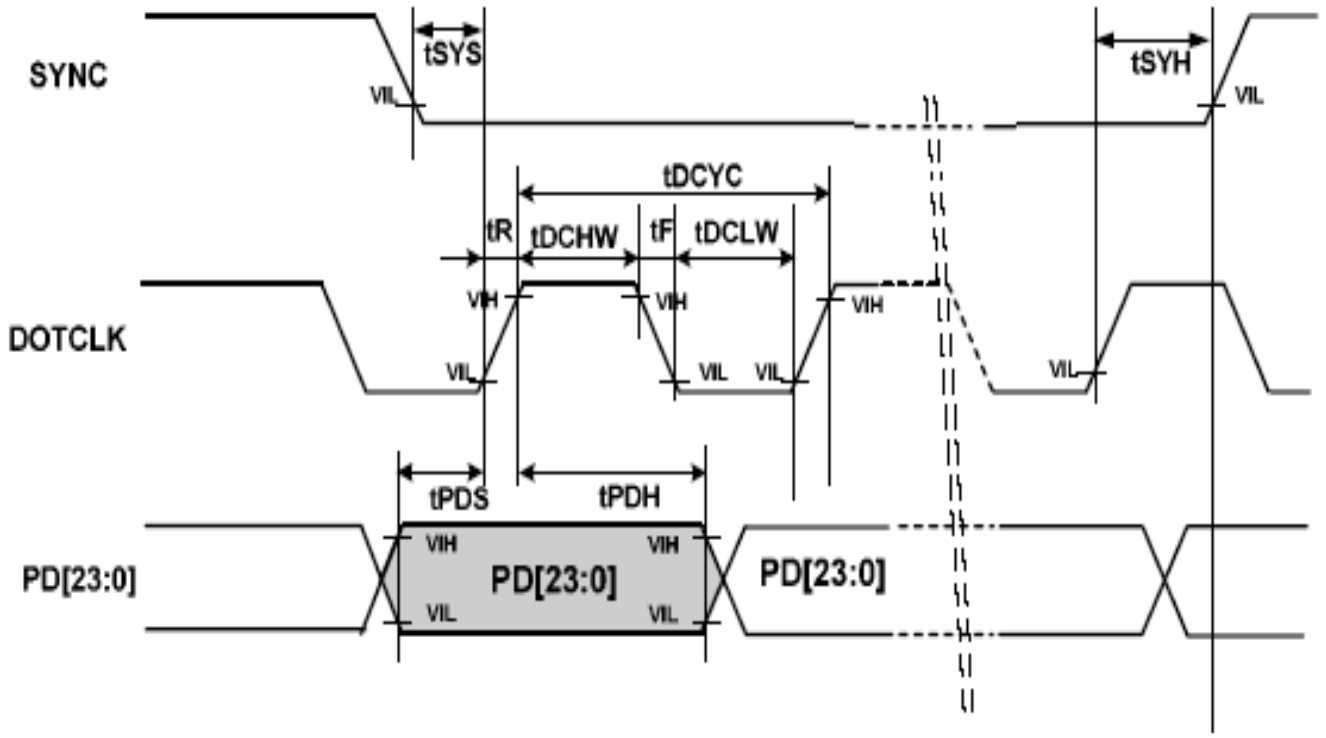

AC Characteristics

*** Clock Synchronized Serial Mode Characteristics**

(Ta = 25℃)

Characteristic	Symbol	Min	Max	Unit
Serial clock cycle time	tscyc	100	-	ns
Serial clock rise/fall time	tR,tF	-	10	
Pulse width high for write	tSCHW	30	-	
Pulse width high for read	tSCHR	50	-	
Pulse width low for write	tSCLW	30	-	
Pulse width low for read	tSCLR	50	-	
Chip Select setup time	tCSS	20	-	
Chip Select hold time	tCSH	50	-	
Serial input data setup time	tSIDS	30	-	
Serial input data hold time	tSIDH	30	-	
Serial output data delay time	tSODD	-	100	
Serial output data hold time	tSODH	5	-	

*** Reset Timing Characteristics**

(Ta = 25℃)

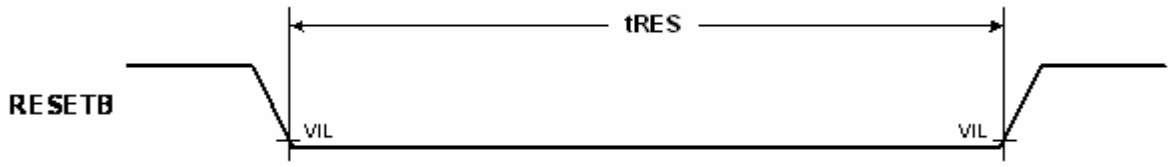

*NOTE. Reset low pulse width shorter than 1us do not make reset. It means undesired short pulse such as glitch, bouncing noise or electorstatic discharge do not cause irregular system reset. Please refer to the table below.

Characteristic	Symbol	Min	Max	Unit
Reset low pulse width	tRES	10	-	us

Table 1. Reset Operation regarding tRES Pulse Width

tRES Pulse	Action
Shorter than 2 us	No reset
Longer than 10 us	Reset
Between 2 us and 10 us	Not determined

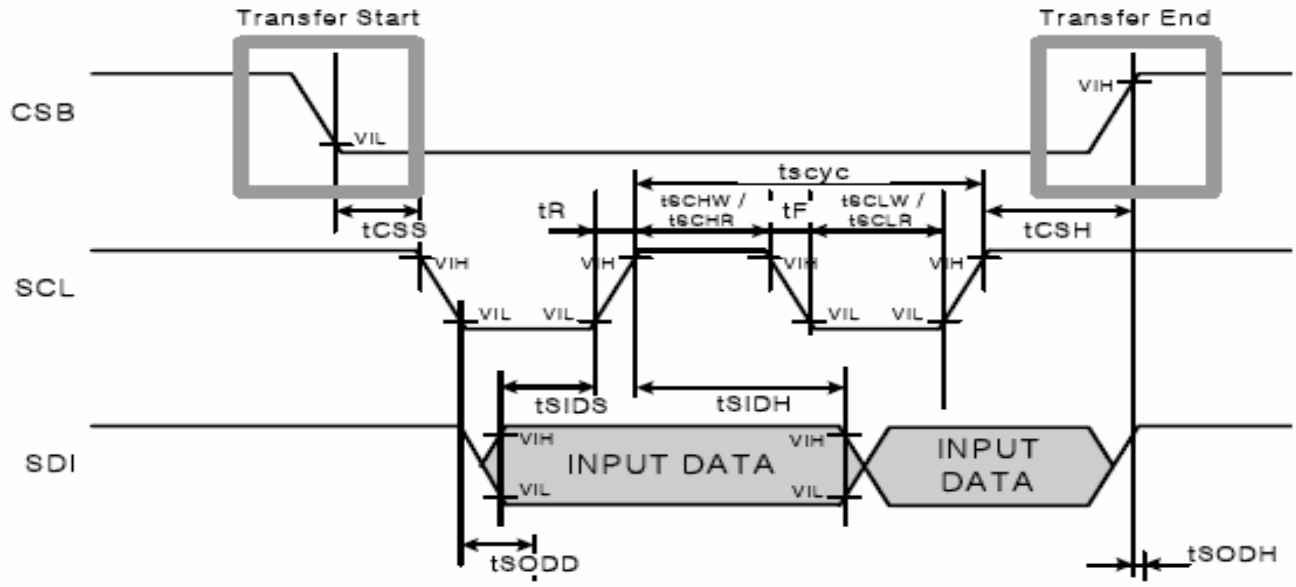

AC Characteristics(SPI Mode)

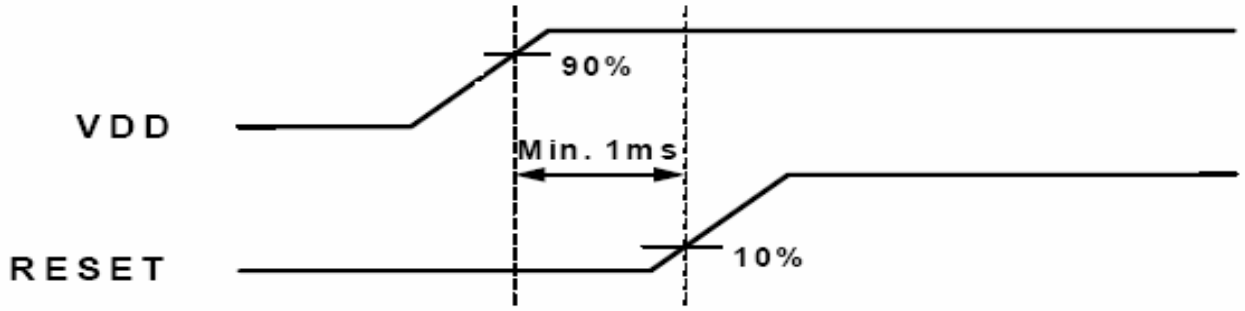

AC Characteristics(RESET timing)

8-6. Power ON/ OFF Sequence

The power on/off sequence should be as the below.

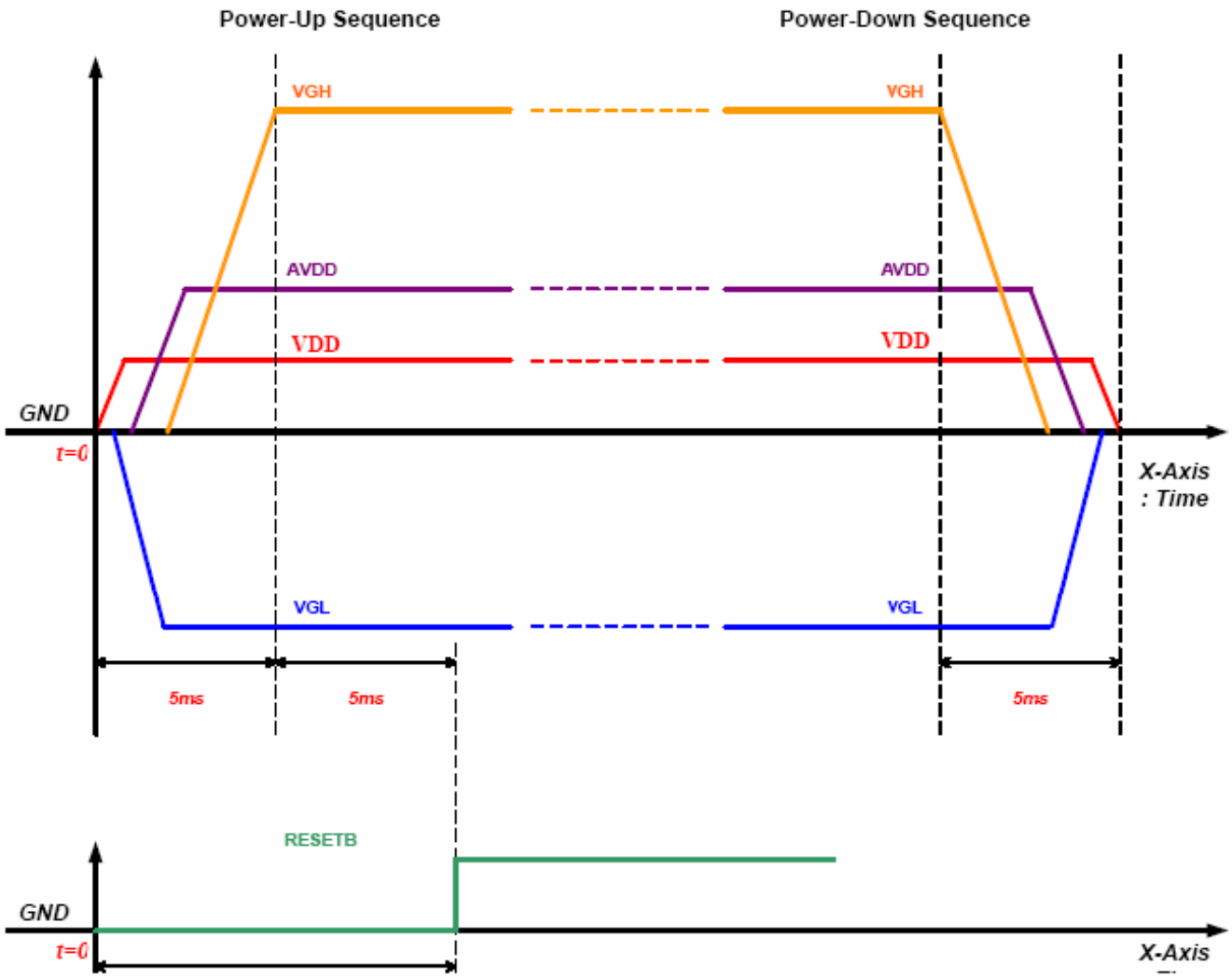

* Power on Sequence / Power off Sequence Initial code

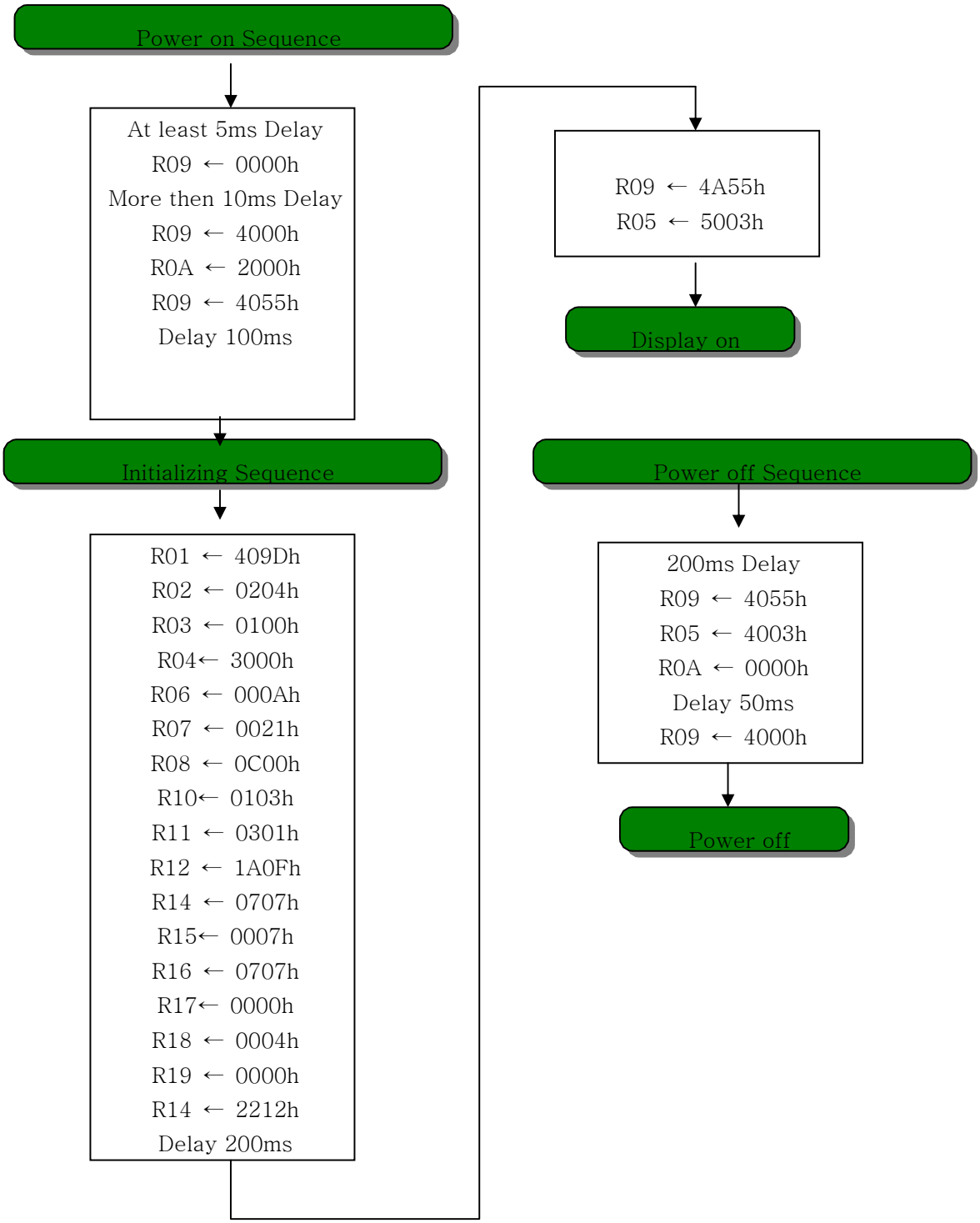

Preliminary

9. Quality Specifications

9-1.Acceptable Quality Level (AQL)

- Major defect :

Defect type	Sampling procedures	AQL
Major	MIL-STD-105E Inspection level II normal inspection single sample inspection	0.65%
Minor	MIL-STD-105E Inspection level II normal inspection single sample inspection	1.5%

A major defect refers to a defect which is not considered to substantially degrade usability for product applications.

- Minor defect :
  A minor defect refers to a defect which is not considered to substantially degraded product application, or a defect which deviates from existing standards almost unrelated to the effective use of the product or it's operation.

9-2. Inspection conditions

- The environmental conditions for inspection shall be as follows.
  Room temperature : 25 ± 5℃
  Humidity : 65 ± 10%RH

- The external visual inspection
  The inspection shall be performed by using a single 20W fluorescent lamp for illumination and the distance from LCD to eyes of the inspector should be 50cm or more.

9-3. Definition of inspection zone in LCD

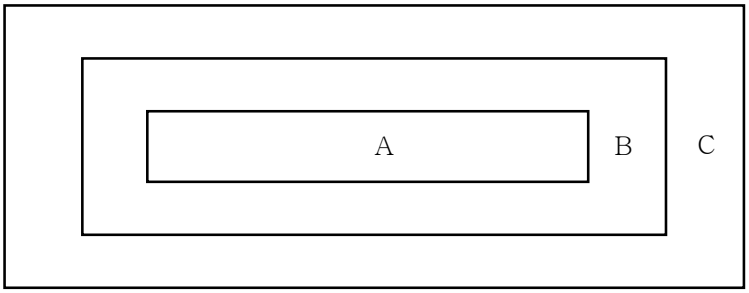

Zone A : Character/Digit area
Zone B : Viewing area
(Except zone A)
Zone C : Outside viewing area
(Invisible area after assembly in customer's products)

9-4. Inspection method

9-4-1 Definition of Dark/Bright Spot or Line

ITEM	Criterion for defects
Dark/Bright Spot (Stain,Dust)	Points on the display which appear dark/bright and remain unchanged in size
Dark/Bright Line (lint)	Lines on the display which appear dark/bright and remain unchanged in size

(1) Light method

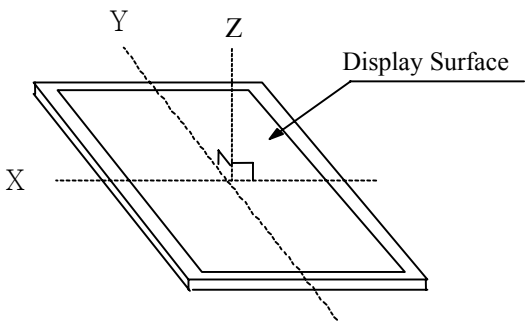

Fluorescent lamp set the perpendicular to the Display surface

(2) Inspection distance and angle

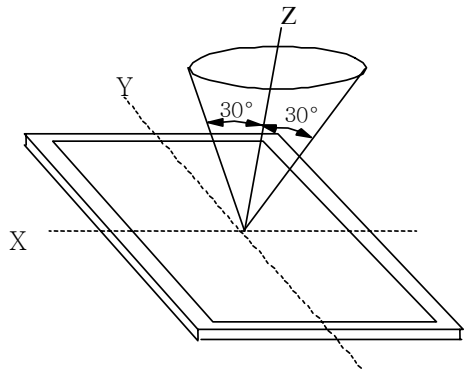

Inspection should be performed within ø
(ø is usually 30°) from Z axis to each X and Y axis.
Inspection distance of any direction within ø
must be kept 50± 5cm to the display surface.

9-5. Incoming Inspection standards

<table>
<tr><th>ITEM</th><th>Criterion for defects</th><th>Defect type</th></tr>
<tr><td>1) Display on Inspection</td><td>(1) Non display is not allowed
(2) Irregular (abnormal) operations are not allowed
(3) Shorts pattern is not allowed
(4) Pattern open is not allowed
(5) All kinds of line defect such as Vertical, Horizontal, Cross are not allowed
(6) Over current is not acceptable
(7) Maximum rating
(8) No Back lighting is reject
Backlight flickering and abnormal lighting are reject
(9) The other Inspections
Visual Defects(Stain, Cross Talk, After Image, Light leakage, etc…)
- VODA TECH will supply LCM after internal outgoing inspection for each visual defect within BIN grade of quality
- These defects is difficult to present by numeric index. therefore VODATECH will supply limited samples for each defect if it is necessary.
- After inspections, buyer requests RMA for LCM which contain serious quality defects beyond agreed BIN grade of quality. VODATECH will do RMA for LCM after discussion with buyer.</td><td>Major</td></tr>
<tr><td>2) Dark/Bright Spot Pinhole,Foreign Particle Scratch
(Main & Sub)
(Ø = (X+Y)/2)
 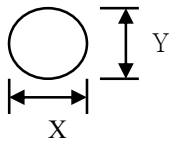
</td><td><table><tr><th rowspan="2">Zone
Size(mm)</th><th colspan="3">Acceptable Q’ty</th></tr><tr><th>A,</th><th>B</th><th>C</th></tr><tr><td>ø<0.15</td><td colspan="2">Acceptable</td><td rowspan="2">Acceptable</td></tr><tr><td>0.15≤ø≤0.5</td><td colspan="2">4</td></tr></table>
Note: NG if three or more spot crowd together</td><td>Minor</td></tr>
<tr><td>3) Dark/Bright Line Polarizer Scratch
(Main & Sub)</td><td><table><tr><th colspan="2">Size(mm)</th><th colspan="3">Acceptable Q’ty</th></tr><tr><th>Length(mm)</th><th>Width(mm)</th><th>A</th><th>B</th><th>C</th></tr><tr><td>L≤0.3</td><td>W≤0.05</td><td colspan="2">Acceptable</td><td rowspan="2">Acceptable</td></tr><tr><td>0.3<L≤2.0</td><td>0.05<W≤0.1</td><td colspan="2">4</td></tr></table></td><td>Minor</td></tr>
</table>

<table>
<tr><th>ITEM</th><th>Criterion for defects</th><th>Defect type</th></tr>
<tr><td>4) Bubble in polarizer
(Main & Sub)</td><td>
<table>
<tr><td rowspan="3">Size(mm)</td><td colspan="3">Acceptable</td></tr>
<tr><td colspan="3">Zone</td></tr>
<tr><td>A</td><td>B</td><td>C</td></tr>
<tr><td>ø<0.3</td><td colspan="2">Acceptable</td><td rowspan="2">Acceptable</td></tr>
<tr><td>0.3≤ø≤0.50</td><td colspan="2">3</td></tr>
</table>
</td><td>Miner</td></tr>
<tr><td>5) Dot</td><td>
<table>
<tr><td rowspan="3">Size(mm)</td><td colspan="3">Acceptable</td></tr>
<tr><td colspan="3">Zone</td></tr>
<tr><td>A</td><td>B</td><td>C</td></tr>
<tr><td>Bright Dot</td><td colspan="2">2</td><td rowspan="3">Accept-able</td></tr>
<tr><td>Dark Dot(Random)</td><td colspan="2">3</td></tr>
<tr><td>Total Bright & Dark Dots</td><td colspan="2">4</td></tr>
<tr><td colspan="4">1) Dot Defect Criteria : 1 dot - Dot size : under 0.6mm
→ Acceptable</td></tr>
</table>
</td><td>Major</td></tr>
<tr><td>6) Stains on
LCD panel surface
(Main & Sub)</td><td>Stains which cannot be removed even when wiped
Lightly with a soft cloth or similar cleaning too are reject</td><td>Minor</td></tr>
<tr><td>7) Back-light
(Main & Sub)</td><td>1)The brightness and color of Backlight should Correspond it is specification
2) Dust and black dot on Back light :ø ≤ 0.20.</td><td>Minor</td></tr>
<tr><td>8) Defect of land surface contact
(Poor soldering)
(Main & Sub)</td><td>Evident crevices which is visible are reject</td><td>Minor</td></tr>
<tr><td>9) Parts mounting
(Main & Sub)</td><td>1) Failure to mount parts
2) Parts not in the specifications are mounted
3) Polarity is reversed</td><td>Minor</td></tr>
<tr><td>10) Parts alignment
(Main & Sub)</td><td>1) LSI, IC lead width is more then 70% beyond pad outline.
2) Chip component is off center and more then 70% of the leads is off the pad outline.</td><td>Minor</td></tr>
</table>

11) Solder Ball. Solder chip (Main & Sub)	1) 0.45< ø , N≥1 2) 0.30< ø ≤0.45 , N≥1 ø:Average diameter of solder ball(unit:mm) 3) 0.50< L , N≥1 L:Average length of solder chip(unit:mm)	Minor Minor Minor
12) Faulty PWB correction (Main & Sub)	1) Failure to stamp or label error, or not legible (all acceptable if legible) 2) The separation is more than 1/3 forbidden indication, Discoloration, In which the characters can be checked	Minor

Preliminary

10. Reliability

All test result of items should be judged in one hour recovery time.

ITEM	Conditions	Criterions
High temperature operating	60℃ , 96 hrs	- After testing, cosmetic and operational defects should not happen. - Contrast ratio should be within 90% of initial value. - Total current consumption should be below double of initial value.
Low temperature operating	-20℃ , 96 hrs	
High temperature storage	70℃ , 96 hrs	
Low temperature storage	-30℃ , 96 hrs	
Humidity	50℃ , 90%RH, 120 hrs	
Thermal shock	25℃→-30℃→25℃→70℃ 5(min) 30(min) 5(min) 30(min) 3 cycle, 55～60%RH	
Temperature Humidity cycle	JIS.C.0028.1, 3 cycles	
Vibration	Time : 1hrs Direction : x,y,z Frequency : 10~55~10Hz Amplitude : 1.5mm(double)	- Not allowed cosmetic & electrical defects - Test will be performed at state of carton box, not each module.
Static electricity	150 Pf , 330 ohm , 8kV 3 times, air discharge	- Not allowed cosmetic & electrical defects - Total current consumption should be below double of initial value. - Incase of “soft-fail”, it would be judged as a good part.

11. General Precautions

11-1. Handling

- Assembled, LCD module should be firmly attached to the set.
  Do not bent or twist.
- Refrain from strong mechanical shock and forces to the module.
  It may cause improper operating or damage to the module.
- Do not touch, press or rub the display panel with hard or stiff tools or subjects.
  The polarizer is easily damaged.
- Wipe off water or oil drop immediately
  If you leave drop for a long time, stain and discoloration may occur.
- When cleaning the surface of polarizer, use soft cloth with solvent like Isopropyl or Ethyl alchol or Hexane.
  Do not use Water, Ketone, Acetone, Ethyl alchol, Toluene, Ethyl acid, Methyl chloride.
- Be care full of applying HCFC, Chlorine(CL), Salfur(S), Spittle, Fingerprint to ITO pattern
  These may cause ITO corrosion.
- When handling the LCD module, put on a soft glover like finger-glover.
- Protection film on the polarizer shall be slowly peeled off just before use,
  so that the electrostatic charge can be minimized.
- Do not touch pads or pins of interface directly with bare hands.
- Protect the module from static electricity, it may cause damage to CMOS LSI.
- If the liquid crystal leaks from the panel it should be kept away from the eyes and mouths.
  In case of contact with skins, wash away thoroughly with soap and water.

11-2. Operation

- Do not input any signals before power is turned on.
- Do not connect or disconnect the module on the state of Power-ON.
- Power supply should be turned on or off according to Power ON/OFF sequence.
- Supply voltage within the specified voltage limit, the maximum rating, higher voltage cause the shorter LCD life or damaged.
- Avoid condensation of water, It may cause improper operation or disconnection of electrode.
- Do not leave LCD module in direct sunlight and strong ultraviolet ray for many hours.
  At that time the liquid crystal shall be deteriorated by ultraviolet.

11-3. Storage

- Do not leave the module in high temperature and humidity for a long time.
  It is recommended to store the module in the place with temperature from 0 to 35℃
  and relative humidity of less than 70%.
- Do not store the LCD module in the direct sunlight.
- Store the module in a dark place without sunlight and fluorescent.
- Avoid intensive shock and falls from a height.

12. Dimensional Outline

Preliminary

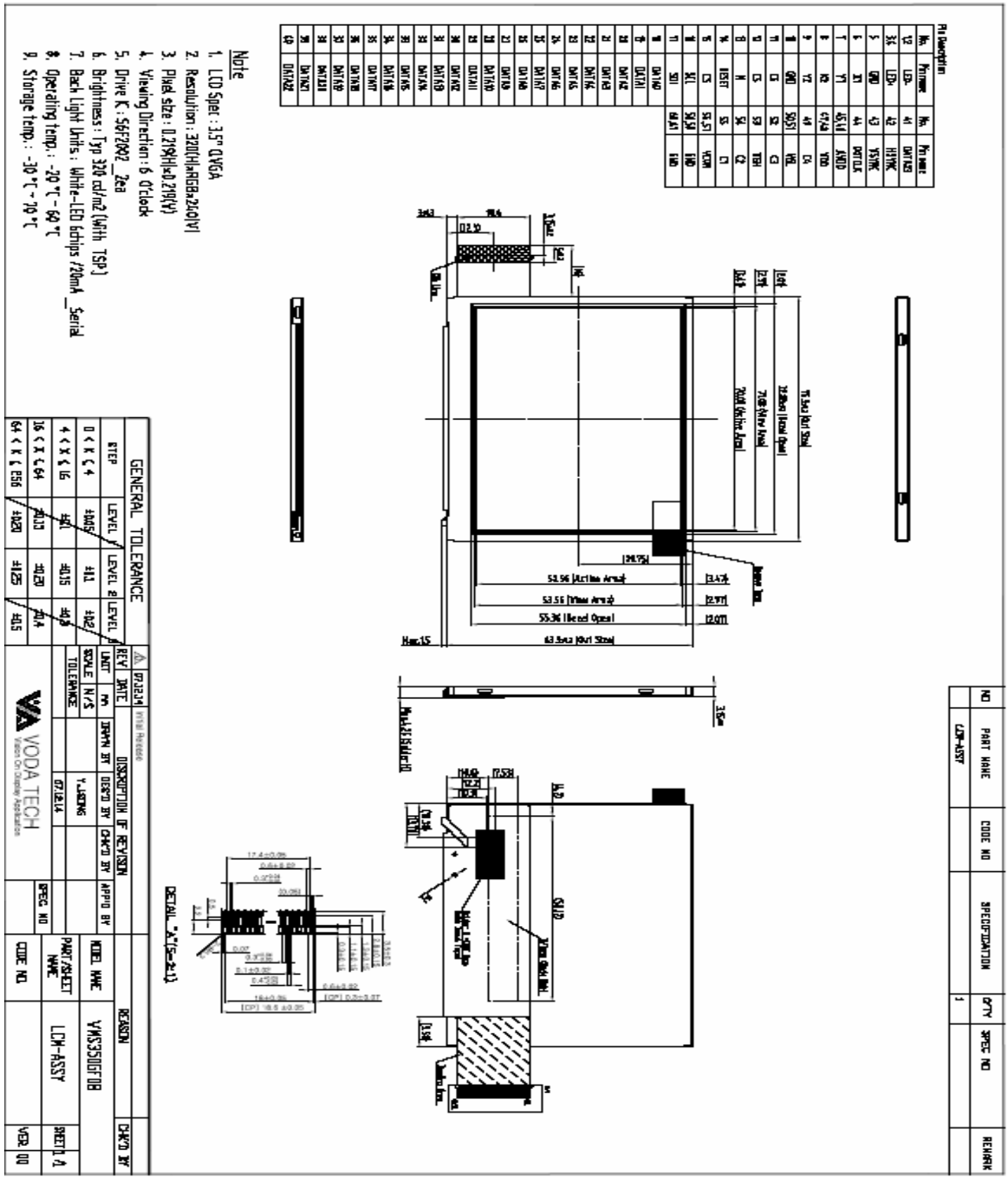

Preliminary

13. Packing Specification

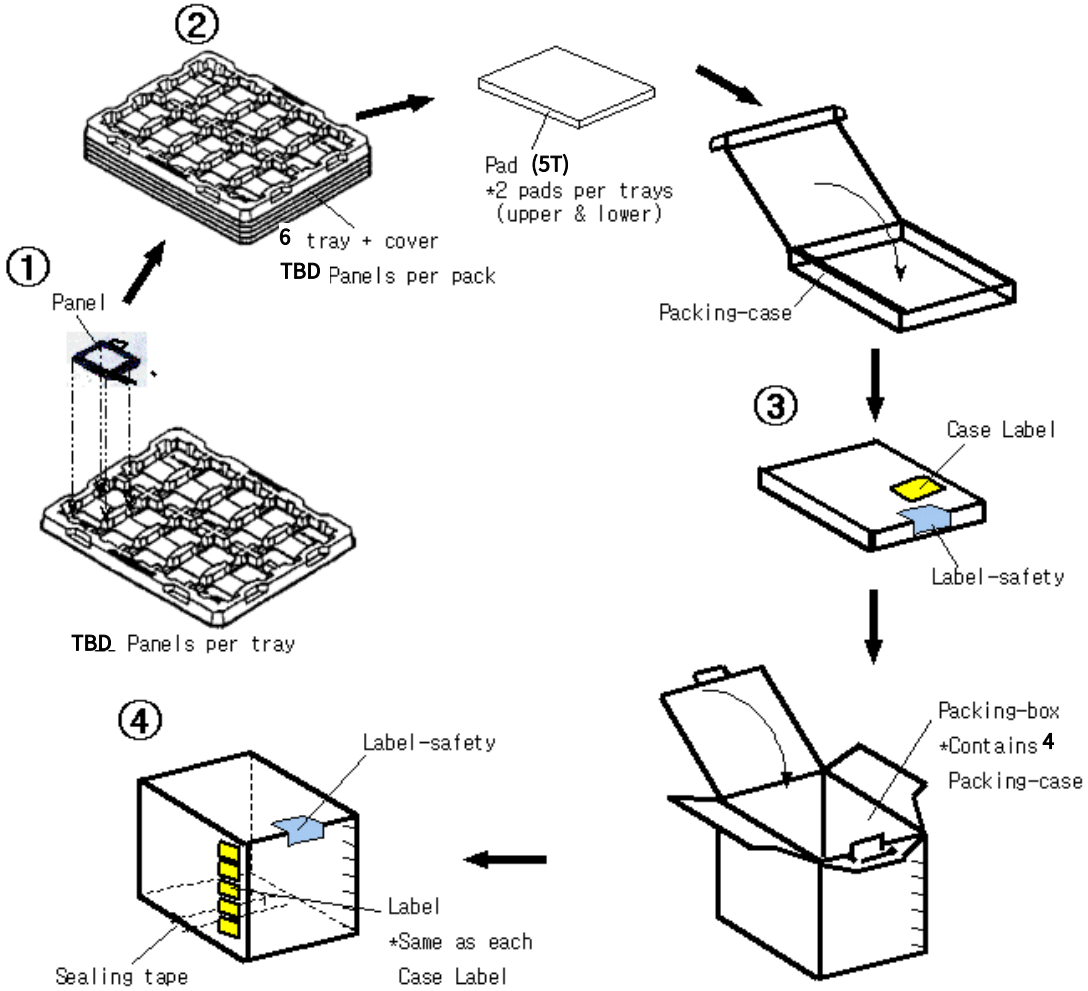

Note (1) Total : Case: Approx. T.B.D
Box: Approx. T.B.D

(2) Size : Case: 384(W) x 278(D) x 16(H)x0.8T
Box: 406(W)x 288(D)x 95(H)

(3) Pad Material : Polyethylene Foam T=3.0

(4) Resistance of tray surface : 10^3~$10^6\Omega$

(5) ESD of tray surface : 20~100V

(6) Place the panels in the tray facing the direction shown in the figure.

(7) Place 3 tray and cover(empty tray) and pads inside the packing-case.

(8) Place 5 packing-case inside the packing-box.(Affix the label)

(8) Seal the packing-box. Affix the label-safety.