LCD Module Technical Specification

First Edition
Aug. 05, 2011

Final Revision
******

Type No. **TVL-55683D116U-LW-I-AAN**

Customer :

Customer's Product No. :

OPTREX CORPORATION

Approved :	*Takanobu Ishiwatari* *QUALITY ASSURANCE DIVISION*
Checked :	*Kazuyoshi Kawaguchi* *Design Div.*
Prepared :	*Noboru Wada* *Design Div.*

APPROVED

By _____

Signature :

Date :

Please return this specification within two month with your signature.
If not returned within two month, specification will be considered
as having been accepted.

Contents

Revision History

Rev.	Date	Comment

1. General Descriptions

1.1 Introduction

The TVL-55683D116U-LW-I-AAN is a color active matrix thin film transistor (TFT) TN liquid crystal display (LCD) that uses amorphous silicon TFT as a switching device. It is composed of a TFT LCD panel, a timing controller, voltage reference, common voltage, column driver, and row driver circuit. This TFT LCD has an 11.6-inch diagonally measured active display area with WXGA resolution (1366 vertical by 768 horizontal pixel array).

1.2 Features

- 11.6"WXGA TFT LCD Panel
- LED Light-bar Backlight System
- Supported WXGA (V:1,366 lines, H:768 pixels) Resolution
- Compatible with RoHS Standard

1.3 Product Summary

Items	Specifications	Unit
Screen Diagonal	11.6	Inch
Active Area	256.125 (H) x 144.000(V)	mm
Pixels H x V	1,366 (x3) x 768	-
Pixel Pitch	0.1875x0.1875	mm
Pixel Arrangement	R.G.B. Vertical Stripe	-
Display Mode	Normally White (TN)	-
White Luminance	220 (Typ.) 5 points average	cd/ m^2 (20mA of per LED)
Contrast Ratio	500（Typ.）	-
Response Time	8(Typ.)	ms
View Angle(L/R/U/D)	75/75/50/60(Typ.)	-
Input Voltage	+3.3 (Typ.)	V
Power Consumption	4.2 (Max.)	Watt
Module Weight	235 (Max.)	g
Outline Dimension (Max)	278.5(H) x 168.0(V) x3.7(D)	mm
Electrical Interface (Logic)	LVDS	-
Support Color	262 K	-
Color Gamut	45%(Typ)	
Optimum Viewing Direction	6 o'clock	Not color Inversion Direction
	12 o'clock	CR Max Direction
Surface Treatment	Anti-Glare	-

1.4 Functional Block Diagram

Figure 1 shows the functional block diagram of the LCD module.

Figure 1 Block Diagram

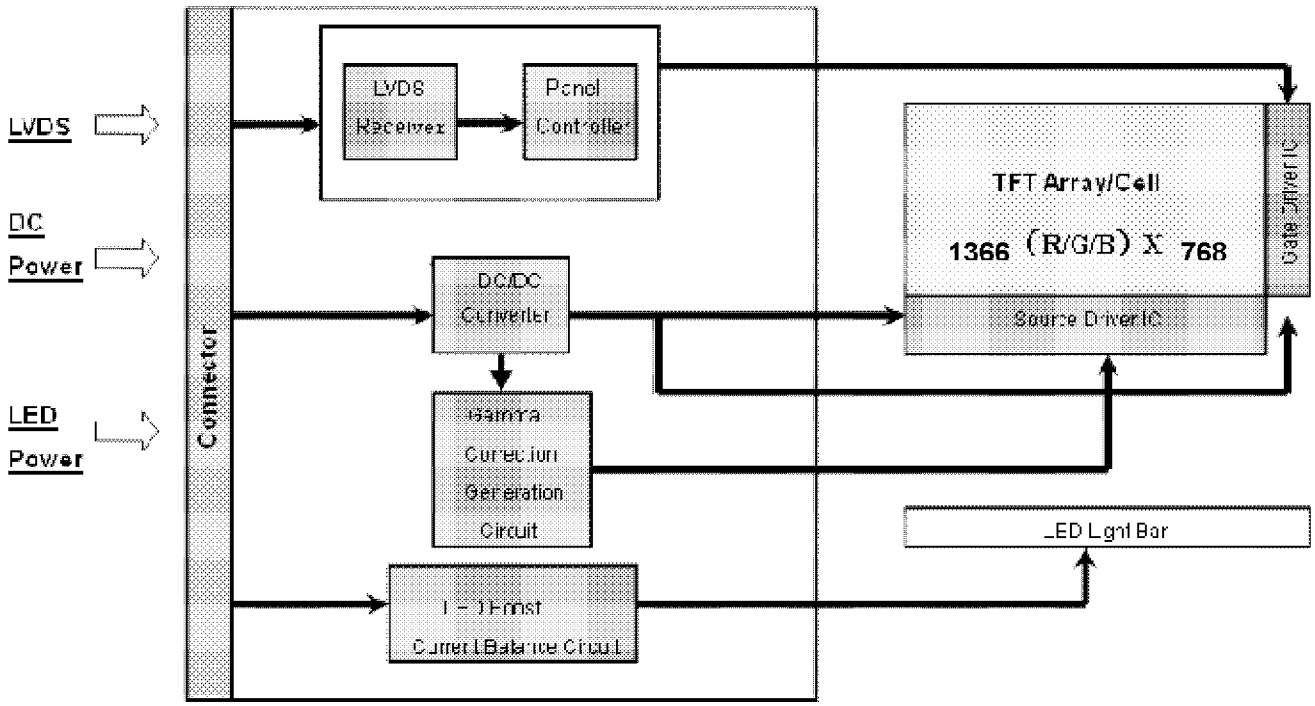

1.5 Pixel Format Image

Figure 2 shows the relationship of the input signals and LCD pixel format image.

Figure 2 Pixel Format

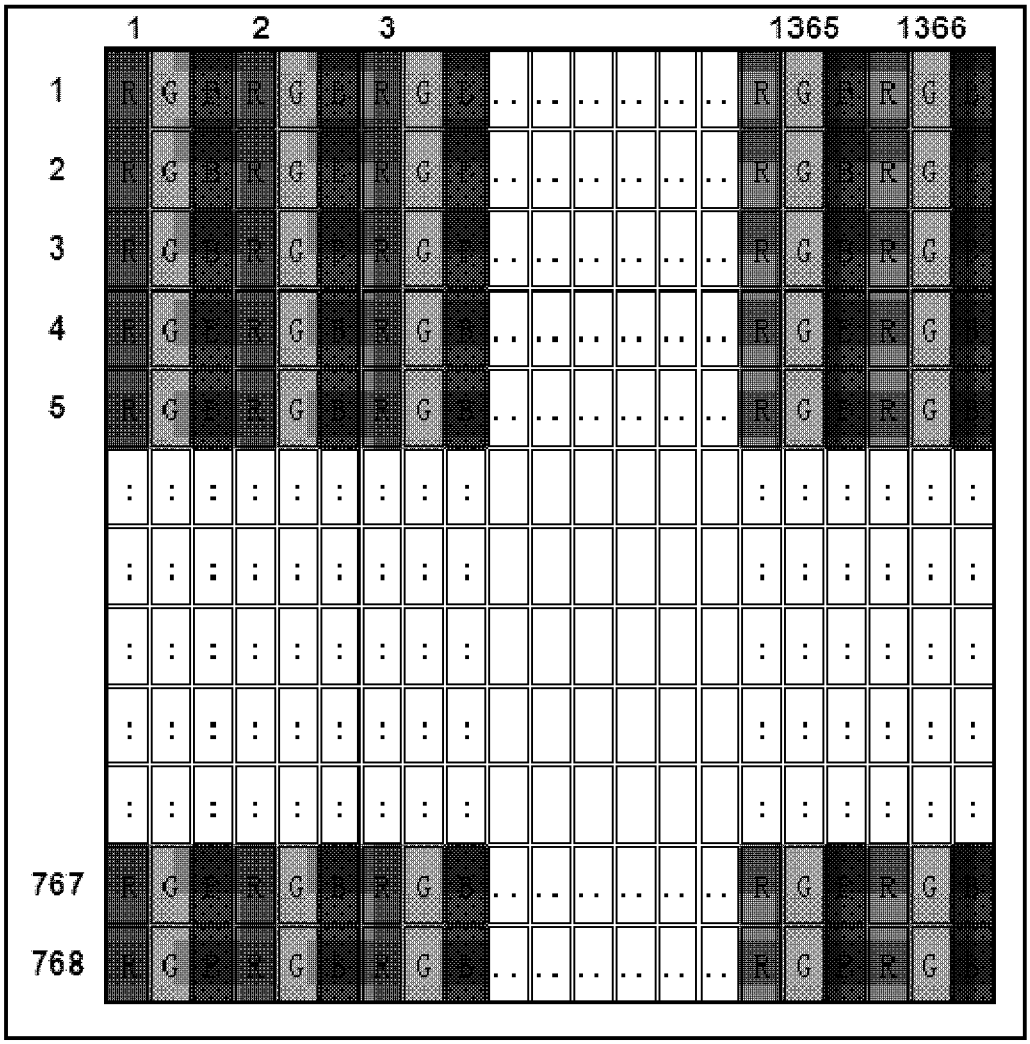

2. Absolute Maximum Ratings

The followings are maximum values which, if exceeded, may cause faulty operation or damage to the LCD module.

Table 1 Absolute Ratings of Environment

Item	Symbol	Min.	Max.	Unit	Conditions
Supply Voltage	V_{DD}	-0.3	4.0	V	Typ.=3.3V
Supply $V_{\_LED}$ Voltage	$V_{\_LED}$	6	21	V	-
Input Signal	-	-0.3	2.7	V	LVDS Signals
Operating Temperature	TOP	0	50	℃	Note(3)
Operating Humidity	HOP	10	80	%RH	Note(3)
Storage Temperature	TST	-20	60	℃	Note(3)
Storage Humidity	HST	10	90	%RH	Note(3)
Vibration	Level	-	1.5	G	30min. for X, Y, Z axis
	Bandwidth	-	10～500	Hz	
Shock	Level	-	220	G	Half Sine Waveform, 2ms

Note

(1) Maximum Wet-Bulb should be 39℃ and No condensation.

(2) When you apply the LCD module for OA system. Please make sure to keep the temperature of LCD module is less than 60℃.

(3) Storage/Operating temperature.

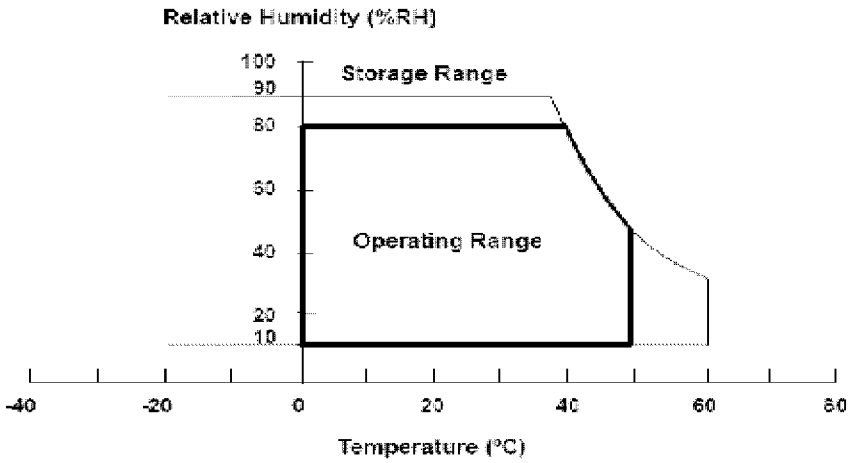

3. Electrical Specification

3.1 Interface Connector

Table 2 Connector Name / Designation

Manufacturer	Starconn/I-PEX (or equivalent)
Type / Part Number	IS050-L40B-C10
Mating Receptacle / Part Number	HS050-L40N-N10

Table 3 Signal Pin Assignment

Pin #	Signal Name	Description	Remarks
1	NC	Not connected	
2	VDD	Power supply	3.3V(Typ.)
3	VDD	Power supply	3.3V(Typ.)
4	VEDID	EDID Power	3.3V(Typ.)
5	NC	Not connected(Reserve)	
6	SCLK_EDID	EDID Clock Input	
7	SDAT_EDID	EDID Data Input	
8	Rin0-	−LVDS differential data input(R0-R5,G0)	
9	Rin0+	+LVDS differential data input(R0-R5,G0)	
10	GND	Ground	
11	Rin1-	−LVDS differential data input(G1-G5,B0-B1)	
12	Rin1+	+LVDS differential data input(G1-G5,B0-B1)	
13	GND	Ground	
14	Rin2-	−LVDS differential data input(B2-B5,HS,VS,DE)	
15	Rin2+	+LVDS differential data input(B2-B5,HS,VS,DE)	
16	GND	Ground	
17	RX_OCLK-	−LVDS differential clock input	
18	RX_OCLK+	+LVDS differential clock input	
19	NC	Not connected(Reserved for Color Engine)	
20	NC	Not connected	
21	NC	Not connected	
22	GND	Ground-Shield	
23	NC	Not connected	
24	NC	Not connected	
25	GND	Ground-Shield	
26	NC	Not connected	
27	NC	Not Connected	
28	GND	Ground-Shield	

Pin #	Signal Name	Description	Remarks
29	NC	Not connected	
30	NC	Not connected	
31	VLED_GND	LED Ground	
32	VLED_GND	LED Ground	
33	VLED_GND	LED Ground	
34	NC	Not connected	
35	VPWM_EN	System PWM Logic Input Level	
36	VLED_EN	LED enable Input Level	3.3V(Typ.)
37	NC	Not connected（Reserved for DBC）	
38	VLED	LED Power Supply 6～21V	12V(Typ.)
39	VLED	LED Power Supply 6～21V	12V(Typ.)
40	VLED	LED Power Supply 6～21V	12V(Typ.)

Note: All input signals shall be at low or Hi-Z state when VDD is off.

3.2 LVDS Receiver

3.3.1 Signal Electrical Characteristics For LVDS Receiver

The built-in LVDS receiver is compatible with (ANSI/TIA/TIA-644) standard.

Table 4 LVDS Receiver Electrical Characteristics

Parameter	Symbol	Min.	Typ.	Max.	Unit	Conditions
Differential Input High Threshold	Vth	-	-	+100	mV	Vcm=+1.2V
Differential Input Low Threshold	Vtl	-100	-	-	mV	Vcm=+1.2V
Magnitude Differential Input Voltage	|Vid|	100	-	600	mV	
Common Mode Voltage	Vcm	0.9	1.2	1.5	V	
Common Mode Voltage Offset	ΔVcm	-	-	50	mV	Vcm=+1.2V

Note:
(1) Input signals shall be at low or Hi-Z state when VDD is off.
(2) All electrical characteristics for LVDS signal are defined and shall be measured at the interface connector of LCD.
(3) All values are at condition of VDD=3.3V, Ta=25℃.

Figure 3 Voltage Definitions

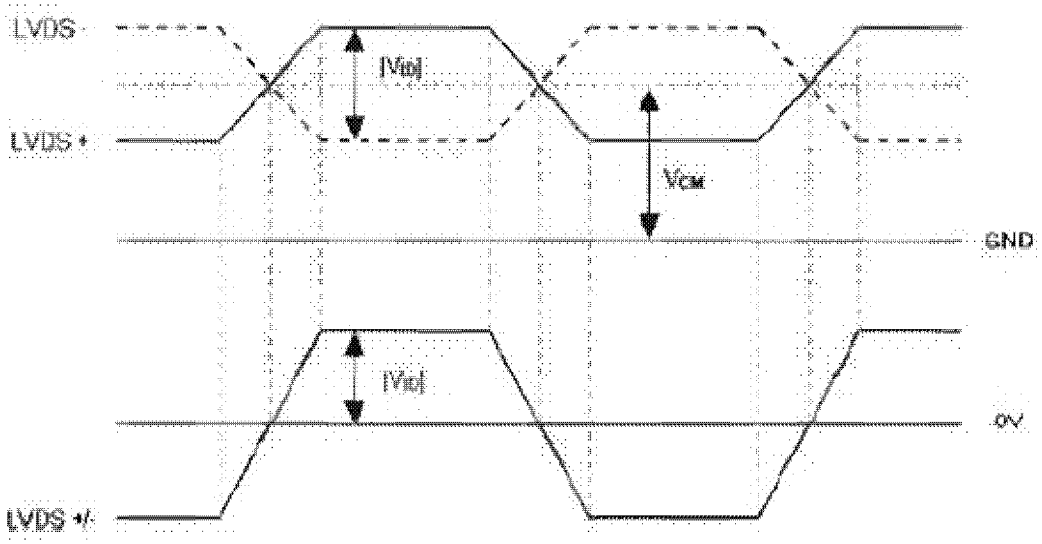

Figure 4 Measurement System

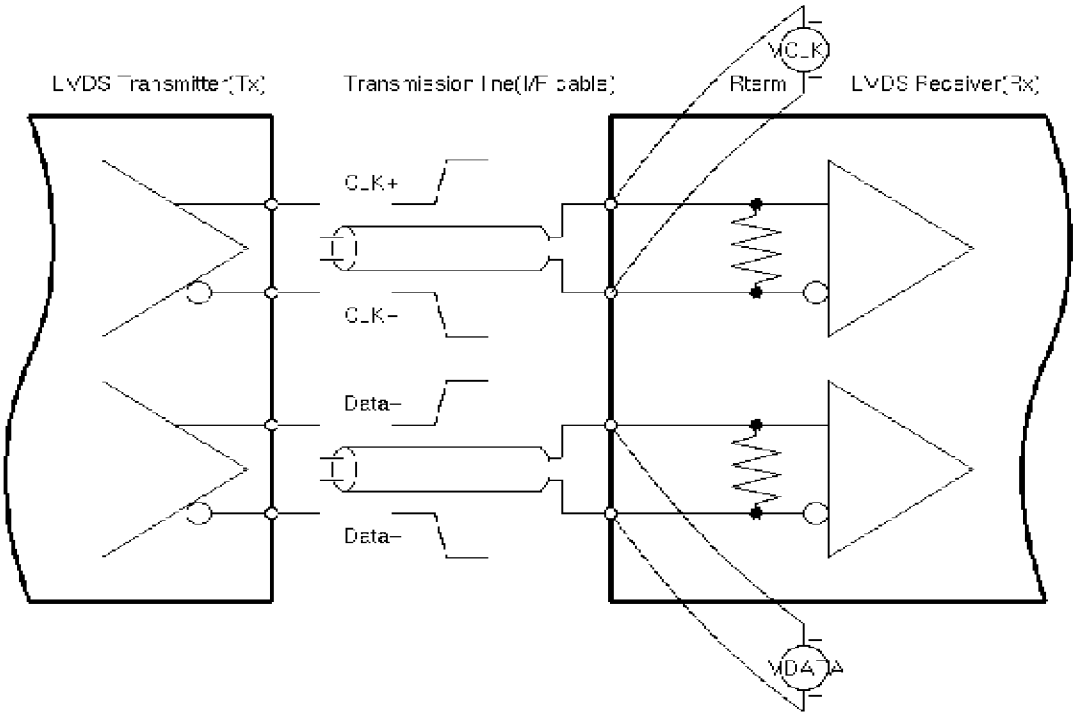

Figure 5 Data mapping

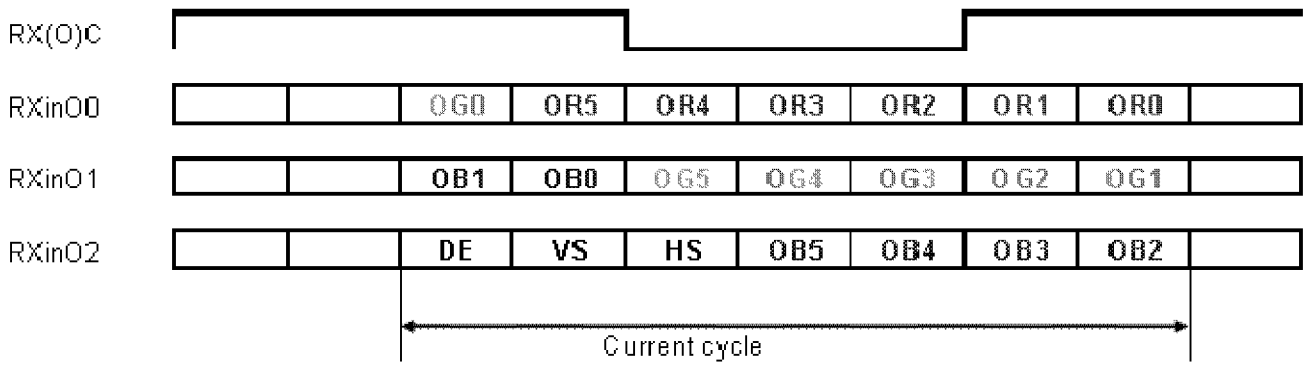

3.3.2 LVDS Receiver Internal Circuit

Figure 6 LVDS Receiver Internal Circuit shows the internal block diagram of the LVDS receiver. This LCD module equips termination resistors for LVDS link.

Figure 6 LVDS Receiver Internal Circuit

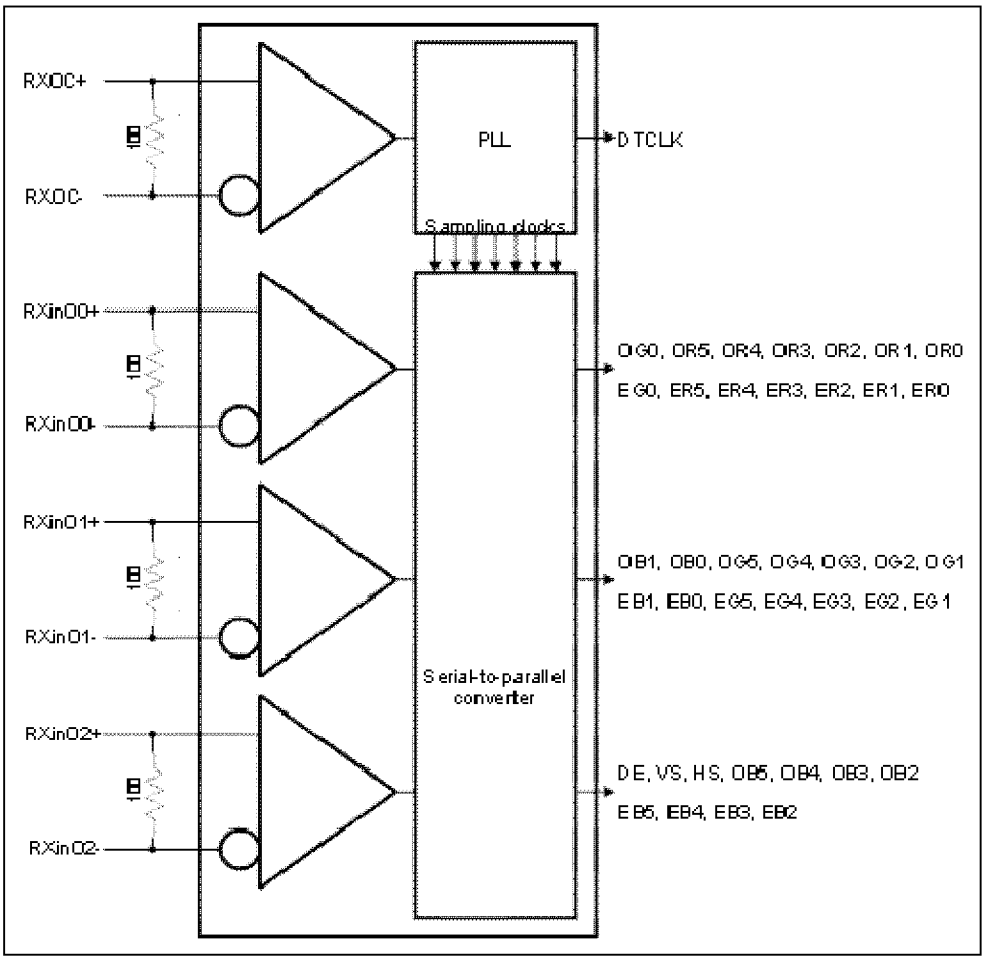

3.3 Interface Timings

Table 5 Interface Timings

Parameter	Symbol	Unit	Min.	Typ.	Max.
LVDS Clock Frequency(single)	F_{dck}	MHz	65.88	76.85	82.67
H Total Time	H_{total}	Clocks	1520	1560	1690
H Active Time	H_{ac}	Clocks	1366	1366	1366
V Total Time	V_{total}	Lines	788	821	850
V Active Time	V_{ac}	Lines	768	768	768
Frame Rate	V_{sync}	Hz	55	60	65

Figure 7 Timing Characteristics

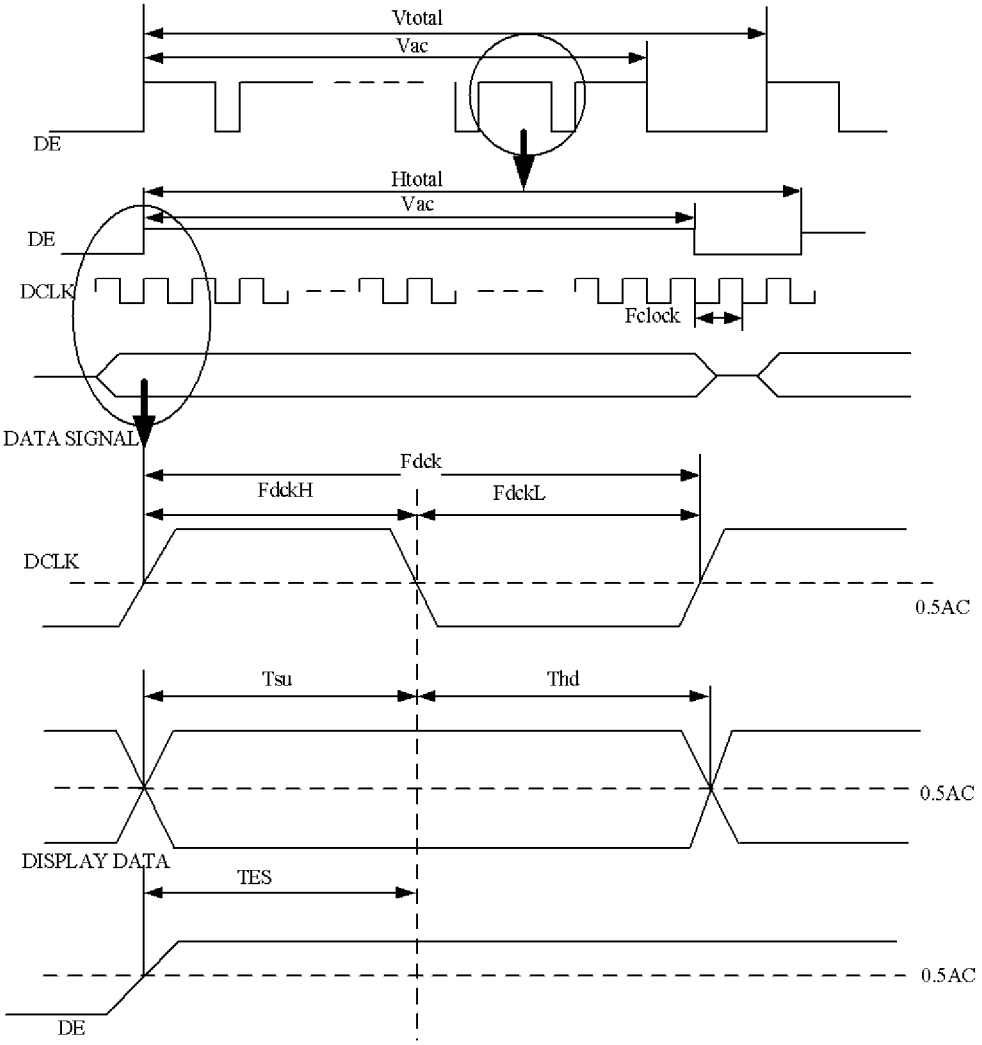

Note: TES is data enable signal setup time.

3.4 Power Consumption

Input power specifications are as follows.

Table 6 Power Consumption

Parameter	Symbol	Min	Typ.	Max	Units	Condition
Logic / LCD Drive Voltage	VDD	3.0	3.3	3.6	[V]	-
VDD Current	IDD	-	280	340	[mA]	Black pattern, 60Hz
VDD Power	PDD	-	-	1.2	[W]	Black pattern, 60Hz
Rush Current	Irush	-	-	2	[A]	Note(1)
Allowable Logic / LCD Drive Ripple Voltage	VDDrp	-	-	300	[mVp-p]	-

Note:

(1) Measure Condition

Figure 8 VDD Rising Time

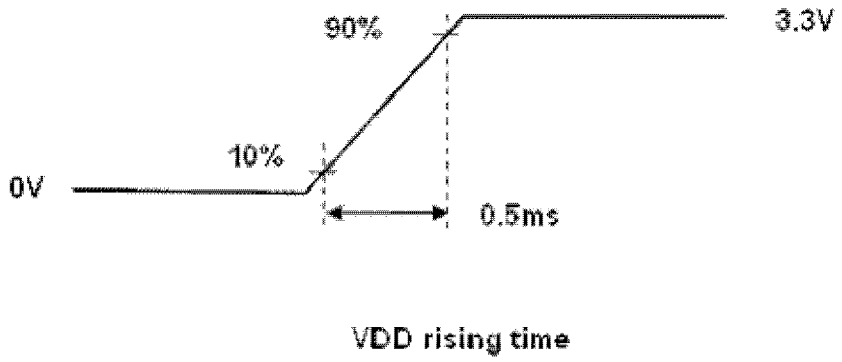

(2) VDD Power Dip Condition

Figure 9 VDD Power Dip

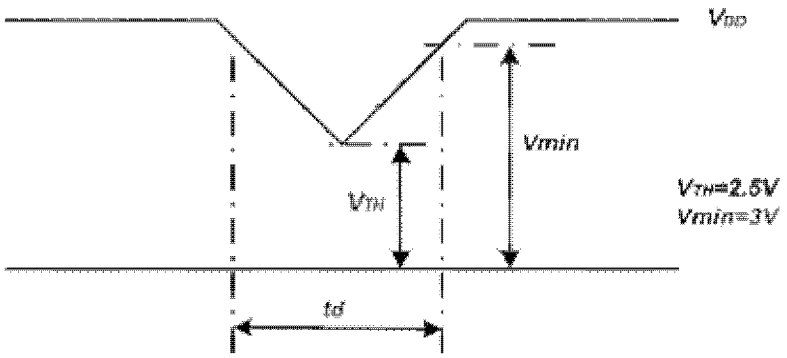

If VTH<VDD≤Vmin, then td≤10ms; when the voltage return to normal our panel must revive automatically.

3.5 Power ON/OFF Sequence

VDD power, interface signals, and lamp on/off sequence are showing on Figure 10.
Signals shall be Hi-Z state or low level when VDD is off.

Figure 10 Power Sequence

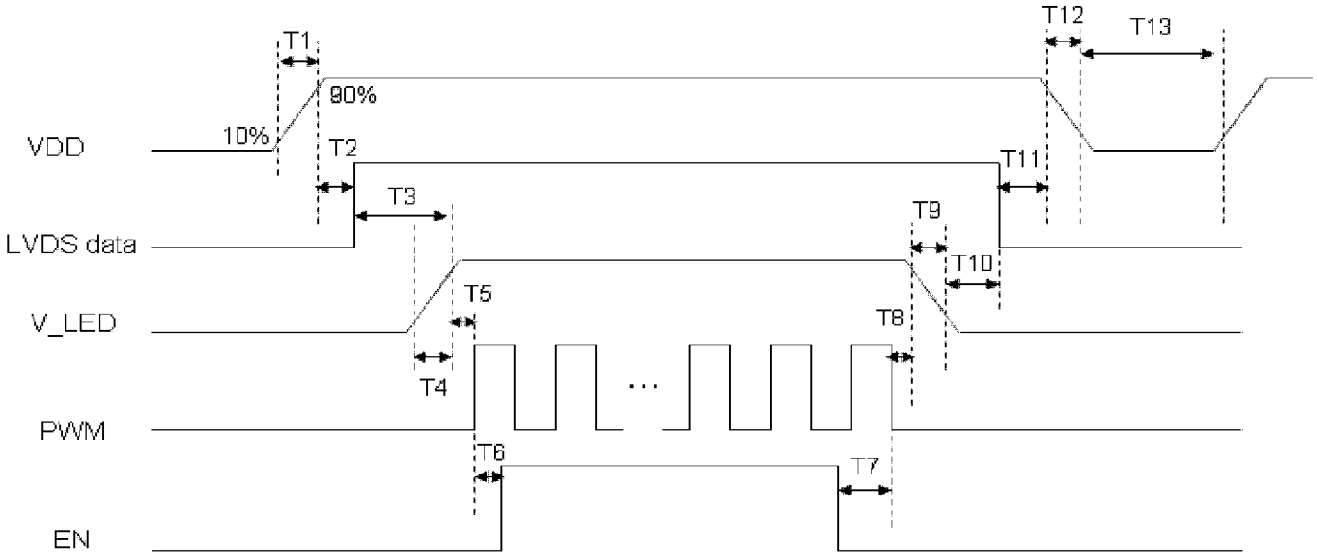

Table 7 Power Sequencing Requirements

Parameter	Symbol	Min.	Typ.	Max.	Unit
VDD Rise Time	T1	0.5	-	10	ms
VDD Good to Signal Valid	T2	30	-	90	ms
Signal Valid to Backlight On	T3	200	-	-	ms
Backlight Power On Time	T4	0.5	-	-	ms
Backlight V_{DD} Good to System PWM On	T5	10	-	-	ms
System PWM on to Backlight Enable On	T6	10	-	-	ms
Backlight Enable off to System PWM Off	T7	0	-	-	ms
System PWM Off to B/L Power Disable	T8	10	-	-	ms
Backlight Power Off Time	T9	-	10	30	ms
Backlight off to Signal Disable	T10	200	-	-	ms
Signal Disable to Power Down	T11	0	-	50	ms
VDD Falling Time	T12	-	10	30	ms
Power Off	T13	500	-	-	ms

4. Backlight Characteristics

4.1 Parameter Guideline of LED Backlight

Table 8 Parameter Guideline for LED Backlight

Symbol	Parameter		Min.	Typ.	Max.	Units	Condition
VLED	LED input		6	12	21	[V]	Note(1)
V_F	LED Forward Voltage		2.9	3.3	3.4	[V]	Ta=25℃
I_F	LED Forward Current			20		[mA]	Ta=25℃
P_{LED}	LED Power Consumption		-	-	3.0	[W]	Ta=25℃ Note(2)
LT	LED Life Time		10,000	-	-	Hours	Ta=25℃ Note(3)
VPWM_EN	PWM Signal Voltage	High	2.0	3.3	3.6	V	-
		Low	0	-	0.5	V	
FPWM	Output PWM frequency		-	200	1K	Hz	-
VLED_EN	LED enable Voltage	High	2.0	3.3	3.6		-
		Low	0	-	0.5	V	
PWM	PWM Duty ratio		5	-	100	%	-

Note:

(1) A higher LED power supply voltage will result in better power efficiency. Keep the $V_{\_LED}$ between 12V and 21V is strongly recommended.

(2) Calculator value for LED chip specification.

(3) The lifetime of LED is defined as the time when LED packages continue to operate under the conditions at Ta=25℃ and I_F=20 mA (per chip) until the brightness becomes≦50% of its original value.

(4) All values are measured at condition of $V_{\_LED}$=12V, Ta=25℃ and 55%RH.

5. Optical Characteristics

The optical characteristics are measured under stable conditions as following notes.

Table 9 Optical Characteristics

Item	Conditions		Specification				
			Min.	Typ.	Max.	Unit	Note
Viewing Angle [degrees] K=Contrast Ratio>10	Horizontal	Left	70	75	-	Deg.	(1),(2)
		Right	70	75	-	Deg.	
	Vertical	Up	45	50	-	Deg.	
		Down	55	60	-	Deg.	
Contrast Ratio	Center		350	500	-	-	(1),(3)
Response Time [ms]	Rising + Falling		-	8	16	ms	(1),(4)
Color Chromaticity (CIE1931)	Red	x	Typ. -0.03	0.581	Typ. +0.03	-	(1)
	Red	y		0.343		-	(1)
	Green	x		0.334		-	(1)
	Green	y		0.570		-	(1)
	Blue	x		0.156		-	(1)
	Blue	y		0.130		-	(1)
	White	x	0.263	0.313	0.363	-	(1)
	White	y	0.279	0.329	0.379	-	(1)
White Luminance [cd/m^2]	I_{LED} =20.0mA		200	220	-	cd/m^2	5point (1), (5)
Luminance Uniformity [%]	I_{LED} =20mA, 13points		60	-	-	%	(1), (6)
	I_{LED} =20mA, 5points		80	-	-		

Note:

(1) Measurement Setup

The LCD module should be stabilized at 25℃ for 15 minutes to avoid abrupt temperature change during measuring. In order to stabilize the luminance, the measurement should be executed after lighting backlight for 15 minutes in a windless room.

Figure 11 Measurement Setup

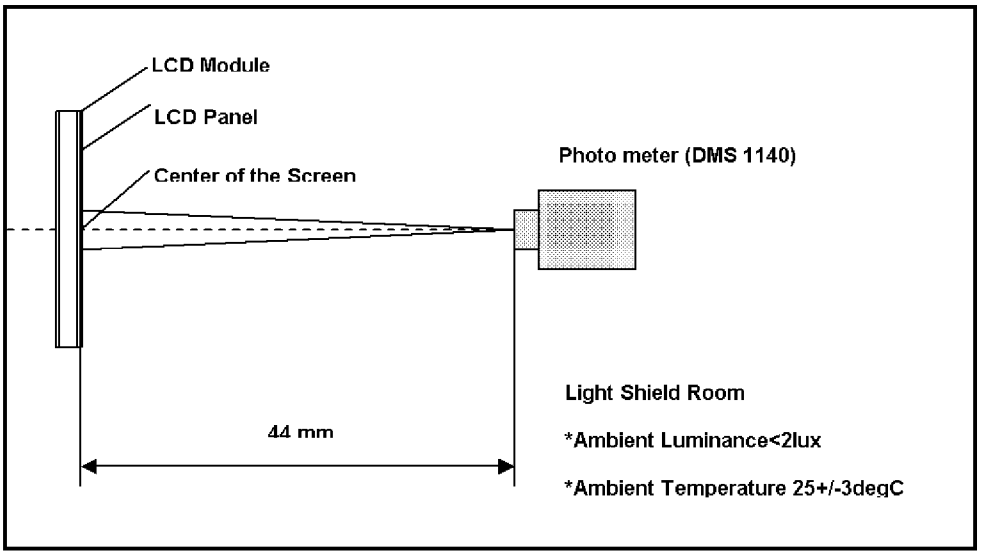

(2) Definition of Viewing Angle

Figure 12 Definition of Viewing Angle

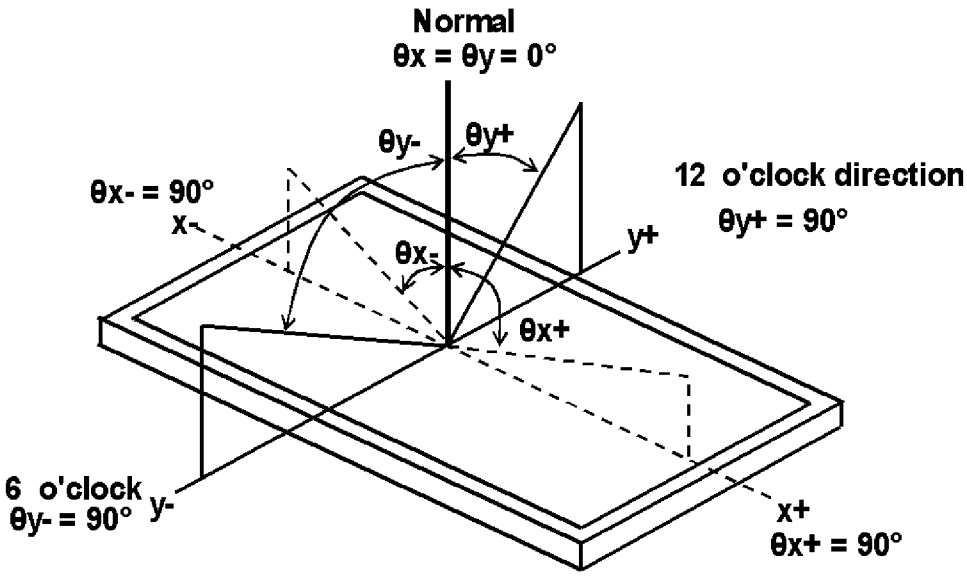

(3)Definition of Contrast Ratio (CR)

The contrast ratio can be calculated by the following expression

Contrast Ratio (CR) = L63 / L0

L63: Luminance of gray level 63, L0: Luminance of gray level 0

(4)Definition of Response Time (T_R, T_F)

Figure 13 Definition of Response Time

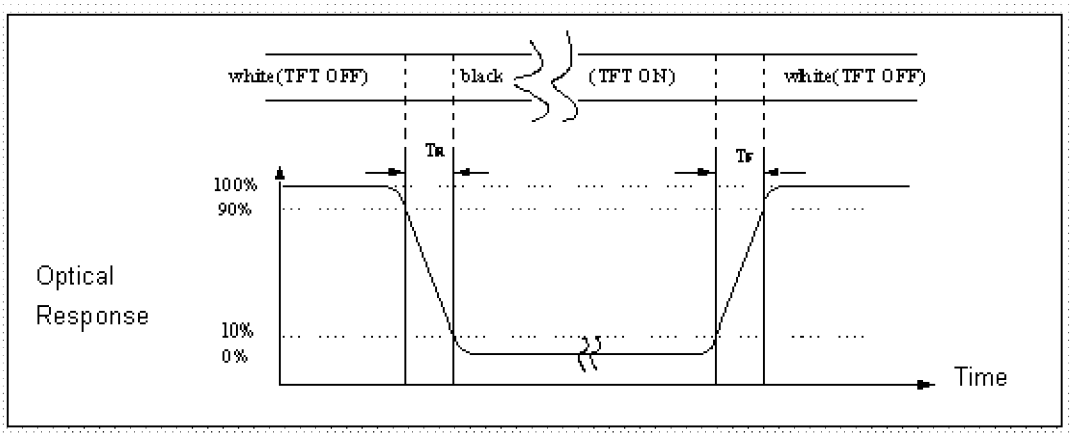

(5) Definition of Luminance White

Measure the luminance of gray level 63 at 5 points. (Fig.14).

Center of Luminance = Y1

$$\text{Average Luminance of 5 points} = \frac{Y_1 + Y_2 + Y_3 + Y_4 + Y_5}{5}$$

(6) Definition of Luminance Uniformity (Variation)

Measure the luminance of gray level 63 at 13 points.

$$\text{Uniformity of 13 points} = \frac{\text{Min Luminance of Y1~Y13}}{\text{Max Luminance of Y1~Y13}} \times 100\%$$

$$\text{Uniformity of 5 points} = \frac{\text{Min Luminance of Y1~Y5}}{\text{Max Luminance of Y1~Y5}} \times 100\%$$

Figure 14 Measurement Locations of 13 Points

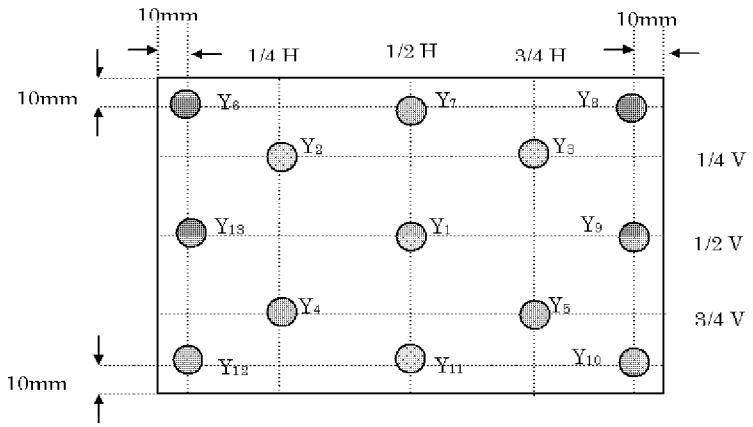

6. Mechanical Characteristics

6.1 Outline Drawing

Figure 15 Reference Outline Drawing (Front Side)

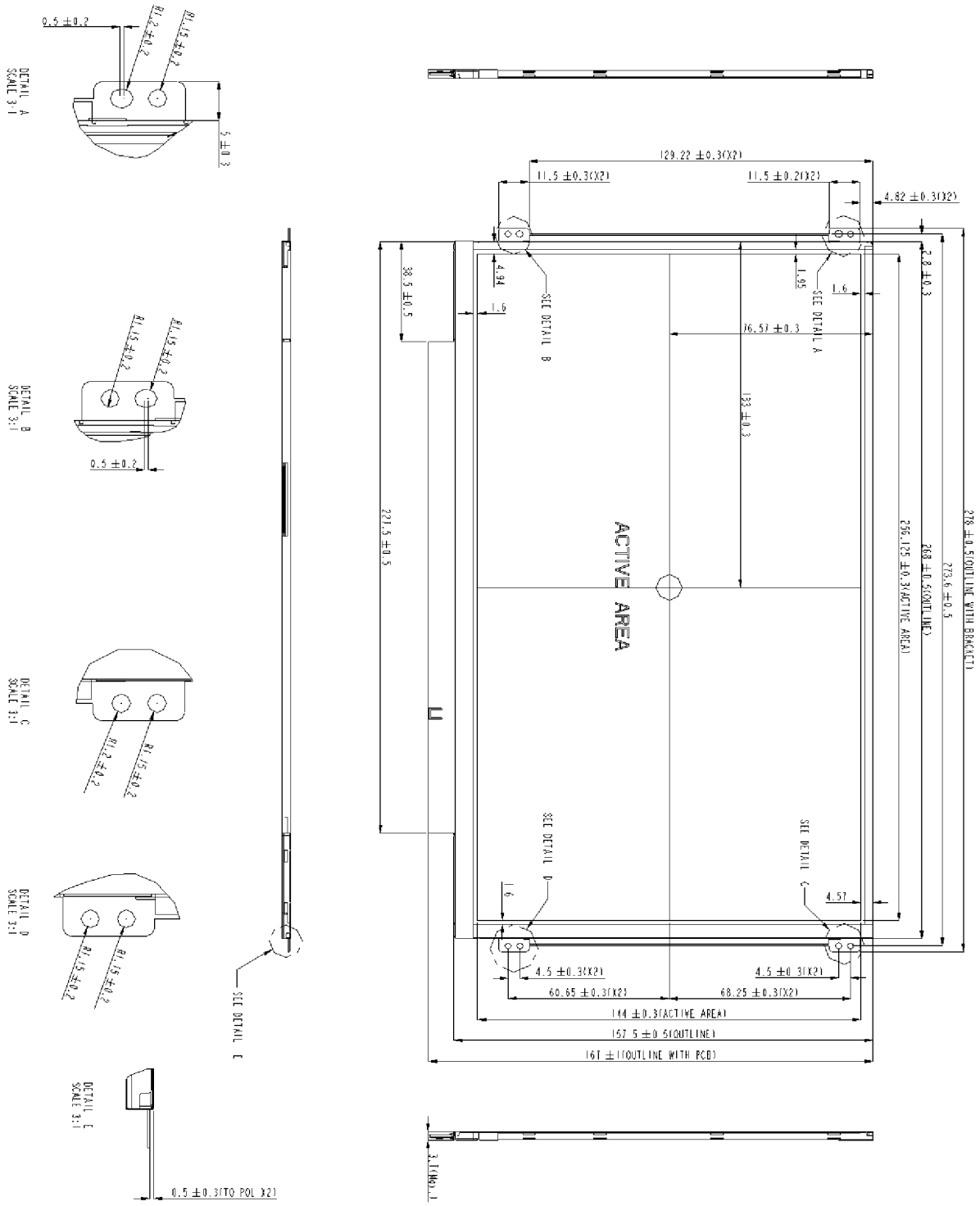

Figure 16 Reference Outline Drawing (Back Side)

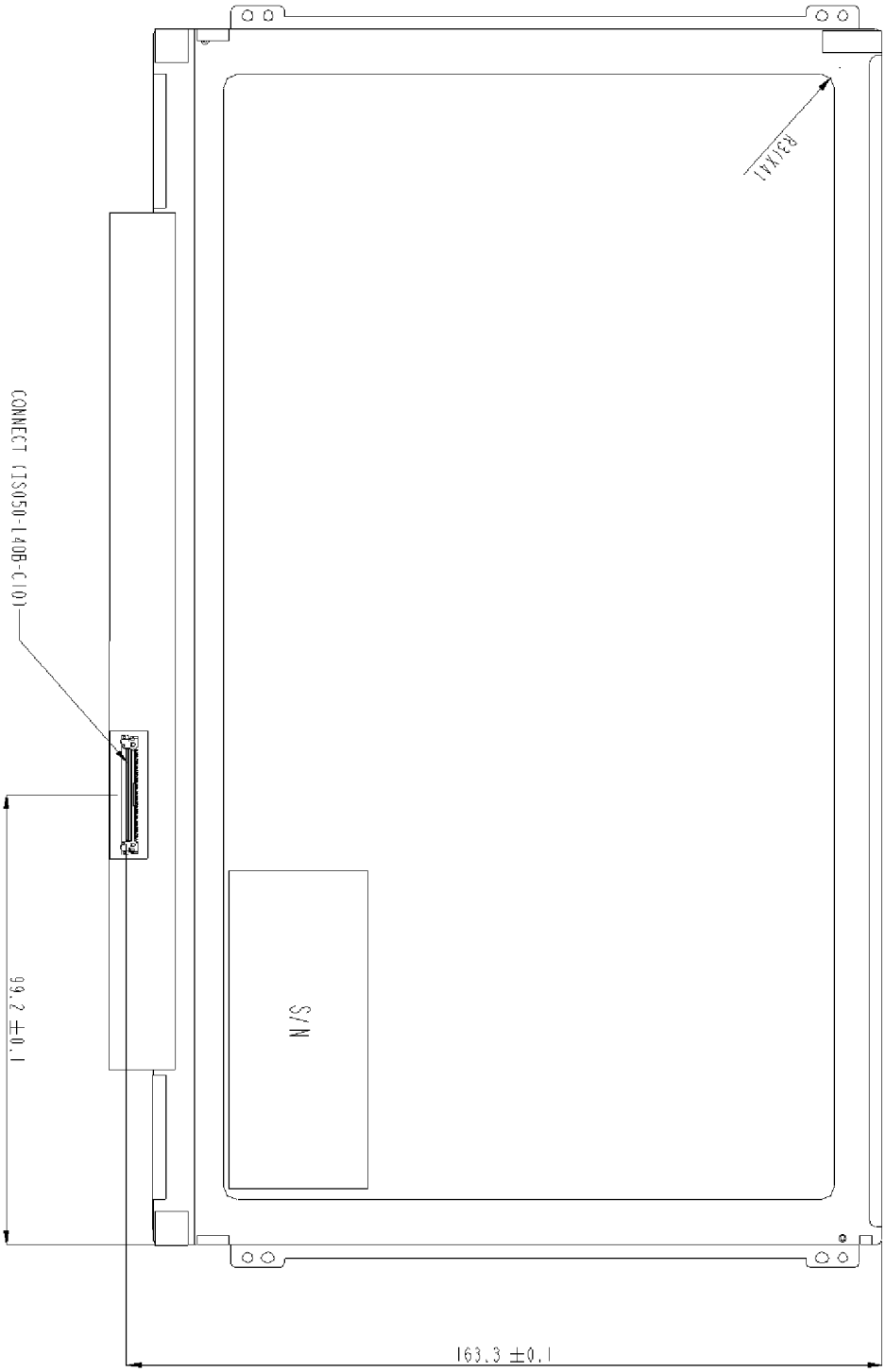

6.2 Dimension Specifications

Table 10 Module Dimension Specifications

Item		Value	Unit
Width		278.0±0.5	mm
Height		167.0±1.0	mm
Thickness (Max.)		3.7	mm
Tape Opening	X	259.675±0.3	mm
	Y	147.200±0.3	mm
Weight (Max.)		235	g
BM Width	| a-b | & | c-d |	≤1.0	mm

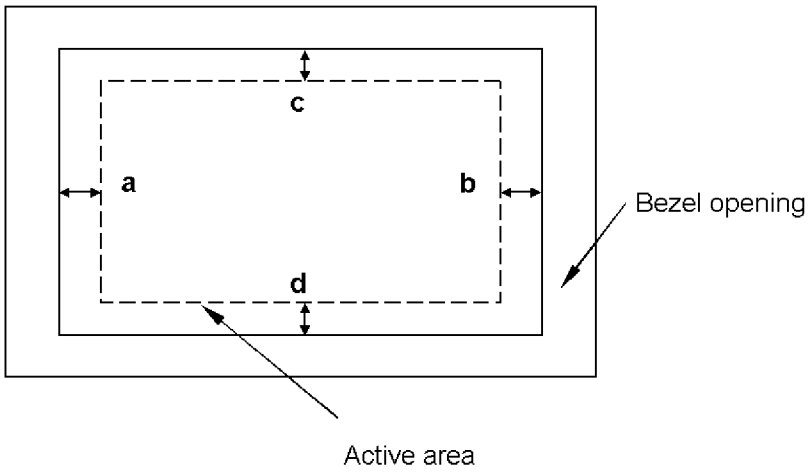

7. Inspection Standards for LCD Modules

7.1 Description

These inspection standards shall be applied to LCD Module supplied by Optrex Corporation.

7.2 The environmental condition of inspection

The environmental condition and visual inspection shall be conducted as below.

(1) Ambient temperature:15~25℃
(2) Humidity:25~75%RH
(3) External appearance inspection shall be conducted by using a single 20W fluorescent lamp or equivalent illumination.
(4) Panel visual inspection on the operation condition for cosmetic shall be conducted at the distance 35cm or more between the LCD module and eyes of inspector. And, the viewing angle shall be 90 degree to the front surface of display panel.
Ambient Illumination: 400~600 Lux for external appearance inspection.
Ambient Illumination:100~200 Lux for light on inspection.

7.3 Method of sampling inspection

Unless defined in the other document, the sampling method shall be in accordance with MIL-STD-105E.

(1) Lot size: quantity of per delivery for inspection per model
(2) Sampling type: Normal inspection, single sampling
(3) Sampling table: MIL-STD-105E

7.4 Classification of defects

Defects are classified two types, major defect according to the defect. And, the definition of defects is classified as below.

(1) Major defect
Any defect may result in functional failure, or reduce the usability of product for its purpose. For example, electrical failure, deformation and etc..
(2) Minor defect
A defect that is not to reduce the usability of product for its intended purpose and un-uniformity, dot defect and etc..
The criteria on major and/or minor judgment will be according with the classification of defects.

7.5 Acceptable quality level (AQL)

AQL means that the quality level of product is acceptable for shipment, and the AQL shall satisfy with customer's quality request.
The AQL (%) for major or minor defect are expressed as below respectively.

(1) Major defect::0.6%
(2) Minor defect::0.8%

7.6 Inspection Criteria

7.6.1 Definition of dot defect

a) The definition of dot: The size of a defective dot over 1/2 of whole dot is regarded as one defective dot.
b) Bright dot: Dots appear bright and unchanged in size in which LCD panel is displaying under black pattern.
c) Dark dot: Dots appear dark and unchanged in size in which LCD panel is displaying under pure red, green, blue picture.
d) 2 dot adjacent=1pair=2dots

2 dot adjacent

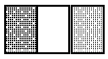

2 dot adjacent

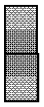

2 dot adjacent(vertical)

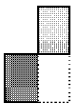

2 dot adjacent(slant)

7.6.2 Display Inspection criteria

Item		Acceptable count
Bright dot	Random	N≦2
	2 dots adjacent (pair)	N=0
	3 dots adjacent or more	N=0
Dark dot	Random	N≦4
	2 dots adjacent (pair)	N≦1
	3 dots adjacent or more	N=0
Distance	Minimum Distance Between Bright dots	L≧15mm
	Minimum Distance Between Dark dots	L≧5mm
Total bright and dark dot		N≦4
Display failure (V-line/H-line/Cross line etc.)		Not allowable
Mura	Judge by limit sample or not visible through ND filter	6%

7.6.3 Appearance inspection criteria

Item	Standards
Foreign Black / White Spots	0.15mm<D≦0.5mm, N≦4
Foreign Lint	0.05mm<W≦0.1mm,0.5mm<L≦5.0mm, N≦4
Polarizer Bubble/Dent	0.15mm<D≦0.5mm, N≦4
Polarizer Scratches	0. 05mm<W≦0.1mm,0.3mm<L≦3.0mm, N≦4

7.6.4 External appearance inspection criteria

Item	Contents	
Screw	Parts mounting, incomplete assembly, deformation, oxidized, crooked or rusty is not permitted.	
Metal frame (Bezel)	Scratch	*Noticeable scratch and exfoliation coating are not permitted. *The oxidized metal is not permitted.
	Incomplete assembly is not permitted.	
Backlight	Scratch	The scratch which may cause a problem in practical use is not permitted.
	Break-off	Breaking off is not permitted.
	Crack	The crack is not permitted.
Stain on Polarizer	The stain which can't be wiped off is not permitted.	
Tape/Label	Incorrect position, missed label is not permitted.	
Connector	Oxidized/rusty connector is not permitted.	
Outline size	Spec. out is not permitted.	

7.6.5 Classification of defects

Inspection Item	Criteria and Description	Defect type
Vertical line	Signal input, vertical line off or abnormal V-line appears	Major
Horizontal line	Signal input, horizontal line off or abnormal H-line appears	Major
Cross line	Pattern signal input, a correct display is not obtained	Major
No display	Signal input, display is dead	Major
Abnormal display	Pattern signal input, a correct display is not obtained	Major
Bezel finger	Bezel finger is missed or not bent	Major
Outline size	Length, Wide, High,	Major
Dots defect	Exceed specified standards	Minor
Light leakage	Visible light leakage appears around the edges of screen	Minor
Foreign material	Exceed specified standards	Minor
External Appearance	A appearance defect that do not affect function or performance	Minor
Polarizer bubble	Exceed specified standards	Minor

8. Package Specification

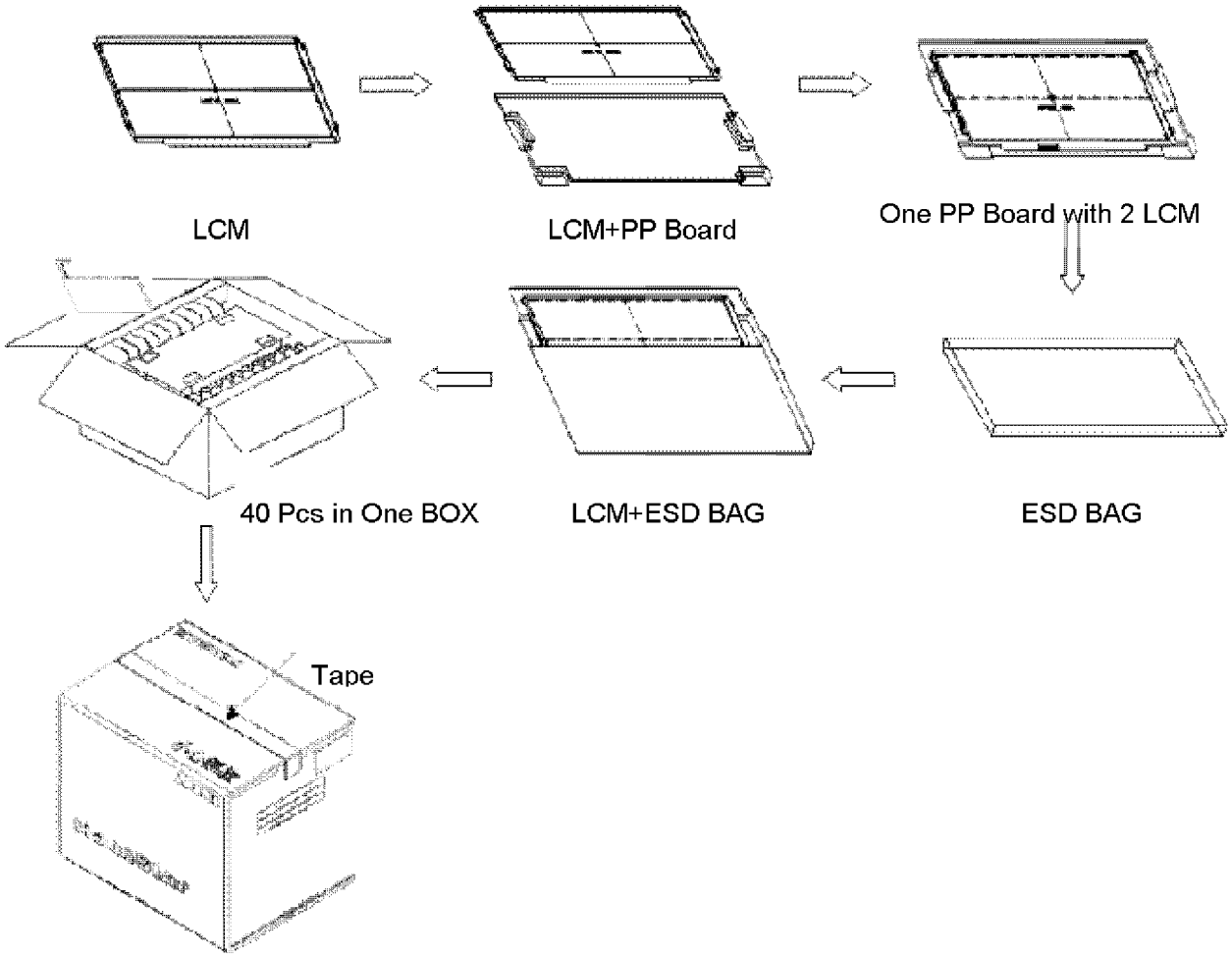

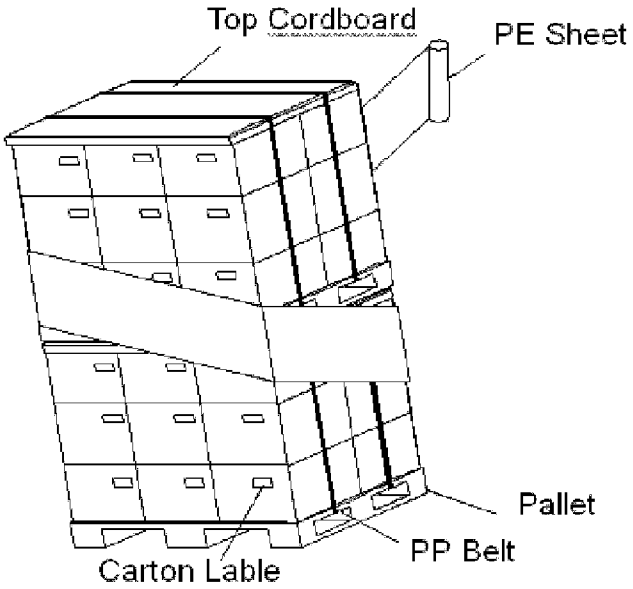

9. Lot Mark

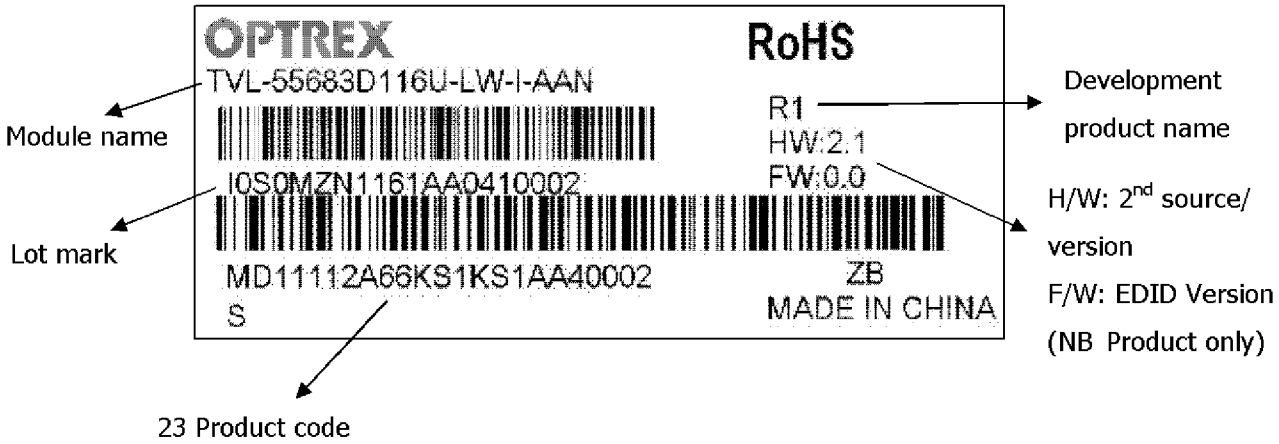

9.1 Lot Mark

1	2	3	4	5	6	7	8	9	1	1	1	1	1	1	1	1	1	1	2

Code 1,2,4,5,6,7,8,9,10,11,16: Internal flow control code.
Code 3: Production Location.
Code 12: Production Year.
Code 13: Production Month.
Code 14,15: Production Date.
Code 17,18,19,20: Serial Number.

Note (1) Production Year

Year	2006	2007	2008	2009	2010	2011	2012	2013	2014	2015
Mark	6	7	8	9	A	B	C	D	E	F

Note (2) Production Month

Month	Jan.	Feb.	Mar.	Apr.	May.	Jun.	Jul.	Aug.	Sep.	Oct	Nov.	Dec.
Mark	1	2	3	4	5	6	7	8	9	A	B	C

9.2 23 Product Barcode

1	2	3	4	5	6	7	8	9	10	11	12	13	14	15	16	17	18	19	20	21	22	23

Code 1,2: MD Module Domain.
Code 3,4,5,6,7: Internal Module Name.
Code 8,9,10,13,16: Internal Flow Control Code.
Code 11,12: Cell line code "SZ".
Code 14 ,15: Module line code "KS".
Code 17,18,19: Year, Month, Day Refer to Barcode Note(1),Note(2).
Code 20~23: Serial Number.

10. General Precaution

10.1Use Restriction

This product is not authorized for use in life supporting systems, aircraft navigation control systems, military systems and any other application where performance failure could be life-threatening or otherwise catastrophic.

10.2 Handling Precaution

1) Please mount LCD module by using mounting holes arranged in four corners tightly.
2) Do not disassemble or modify the module. It may damage sensitive parts inside LCD module, and may cause scratches or dust on the display. Optrex does not warrant the module, if customers disassemble or modify the module.
3) If LCD panel is broken and liquid crystal spills out, do not ingest or inhale liquid crystal, and do not contact liquid crystal with skin. If liquid crystal contacts mouth or eyes, rinse out with water immediately. If liquid crystal contacts skin or cloths, wash it off immediately with alcohol and Rinse thoroughly with water.
4) Disconnect power supply before handling LCD module.
5) Refrain from strong mechanical shock and /or any force to the module.
6) Do not exceed the absolute maximum rating values, such as the supply voltage variation, input voltage variation, variation in parts' parameters, environmental temperature; etc otherwise LCD module may be damaged. It's recommended employing protection circuit for power supply.
7) Do not touch, push or rub the polarizer with anything harder than HB pencil lead. Use fingerstalls of soft gloves in order to keep clean display quality, when Persons handle the LCD module for incoming inspection or assembly.
8) When the surface is dusty, please wipe gently with absorbent cotton or other soft Material. When cleaning the adhesives, please use absorbent cotton wetted with a little petroleum benzene or other adequate solvent.
9) Wipe off saliva or water drops as soon as possible. If saliva or water drops Contact with polarizer for a long time, they may causes deformation or color Fading.
10) Protection film must be removed very slowly from the surface of LCD module to prevent from electrostatic occurrence.
11) Because LCD module uses CMOS-IC on circuit board and TFT-LCD panel, it is very weak to electrostatic discharge, Please be careful with electrostatic discharge .Persons who handle the module should be grounded through adequate methods.
12) Do not adjust the variable resistor located on the module.

10.3 Storage Precaution

1) Please do not leave LCD module in the environment of high humidity and high temperature for a long time.
2) The module shall not be exposed under strong light such as direct sunlight. Otherwise, Display characteristics may be changed.
3) The module should be stored in a dark place. It is prohibited to apply sunlight or fluorescent light in storage.

10.4 Operation Precaution

1) Do not connect or disconnect the module in the "Power On" condition.
2) Power supply should always be turned on/off by 9.0 "Power on/off sequence".
3) Module has high frequency circuits. Sufficient suppression to the electromagnetic interference should be done by system manufacturers. Grounding and shielding methods may be important to minimize the interference.
4) After installation of the TFT Module into an enclosure, do not twist nor bend the TFT Module even momentary. At designing the enclosure, it should be taken into consideration that no bending/ twisting forces are applied to the TFT Module from outside.
   Otherwise the TFT Module may be damaged.

10.5 Others

1) Ultra-violet ray filter is necessary for outdoor operation.
2) Avoid condensation of water which may result in improper operation or disconnection of electrode.
3) If the module keeps displaying the same pattern for a long period of time, the image may be "Sticked" to the screen.
4) This module has its circuitry PCB on the rear side and should be handled carefully in order not to be stressed.

10.6 Disposal

When disposing LCD module, obey the local environmental regulations.