PRIME VIEW

PO023OX1

Version：1.0

TECHNICAL SPECIFICATION

MODEL NO.：PO023OX1

The content of this information is subject to be changed without notice.
Please contact PVI or its agent for further information

☐Customer’s Confirmation

Customer _____

Date _____

By _____

☐PVI’s Confirmation

Confirmed By _____

Prepared By _____

The information contained herein is the exclusive property of Prime View International Co., Ltd. and shall not be distributed, reproduced, or disclosed in whole or in part without prior written permission of Prime View International Co., Ltd.

Revision History

Rev.	Issued Date	Engineer	Revised Contents
1.0	Apr. 01, 2008	吳昌霖	New

The information contained herein is the exclusive property of Prime View International Co., Ltd. and shall not be distributed, reproduced, or disclosed in whole or in part without prior written permission of Prime View International Co., Ltd.

TECHNICAL SPECIFICATION

CONTENTS

NO.	*ITEM*	*PAGE*
-	Cover	1
-	Revision History	2
-	Contents	3
1	Application	4
2	Features	4
3	Mechanical Specifications	4
4	Mechanical Drawing of TFT-LCD module	5
5	Input / Output Terminals	6
6	Absolute Maximum Ratings	7
7	Electrical Characteristics	8
8	Pixel Arrangement	9
9	Block Diagram	9
10	Timing specification	10
11	Interface specification	12
12	Optical Characteristics	14
13	Handling Caution	17
14	Reliability Test	19
15	Packing	20

The information contained herein is the exclusive property of Prime View International Co., Ltd. and shall not be distributed, reproduced, or disclosed in whole or in part without prior written permission of Prime View International Co., Ltd.

1. Application：

The PO023OX1 applies to a color TFT LCD module which has octagonal outline. PO023OX1 module applies to OA product, GPS, which require high quality flat panel display. If you must use in high reliability environment can’t over reliability test condition.

2. Features：

. Pixel in stripe configuration
. Slim and compact
. Wide viewing angle
. High Brightness
. Octagonal LCD
. Driver IC：HX8325

3. Mechanical Specifications：

Parameter	Specifications	Unit
Screen Size	2.3” TFT LCD	inch
Display Format	240×(R, G, B)×240	dot
Display Colors	65,536	
Active Area	D = 57.96 (Circular)	mm
Pixel Pitch	0.2415×0.2415	mm
Pixel Configuration	Stripe	
Outline Dimension	75.60(W)×75.70(H)×7.64(D)	mm
Weight	46±5	g
Surface treatment	Anti-glare and wide-view film	
Back Light	2-LED,150mA	
Display mode	Normally white	
Gray scale inversion direction	6 [Refer to Note 12-1]	o’ clock

The information contained herein is the exclusive property of Prime View International Co., Ltd. and shall not be distributed, reproduced, or disclosed in whole or in part without prior written permission of Prime View International Co., Ltd.

4. Mechanical Drawing of TFT-LCD Module：

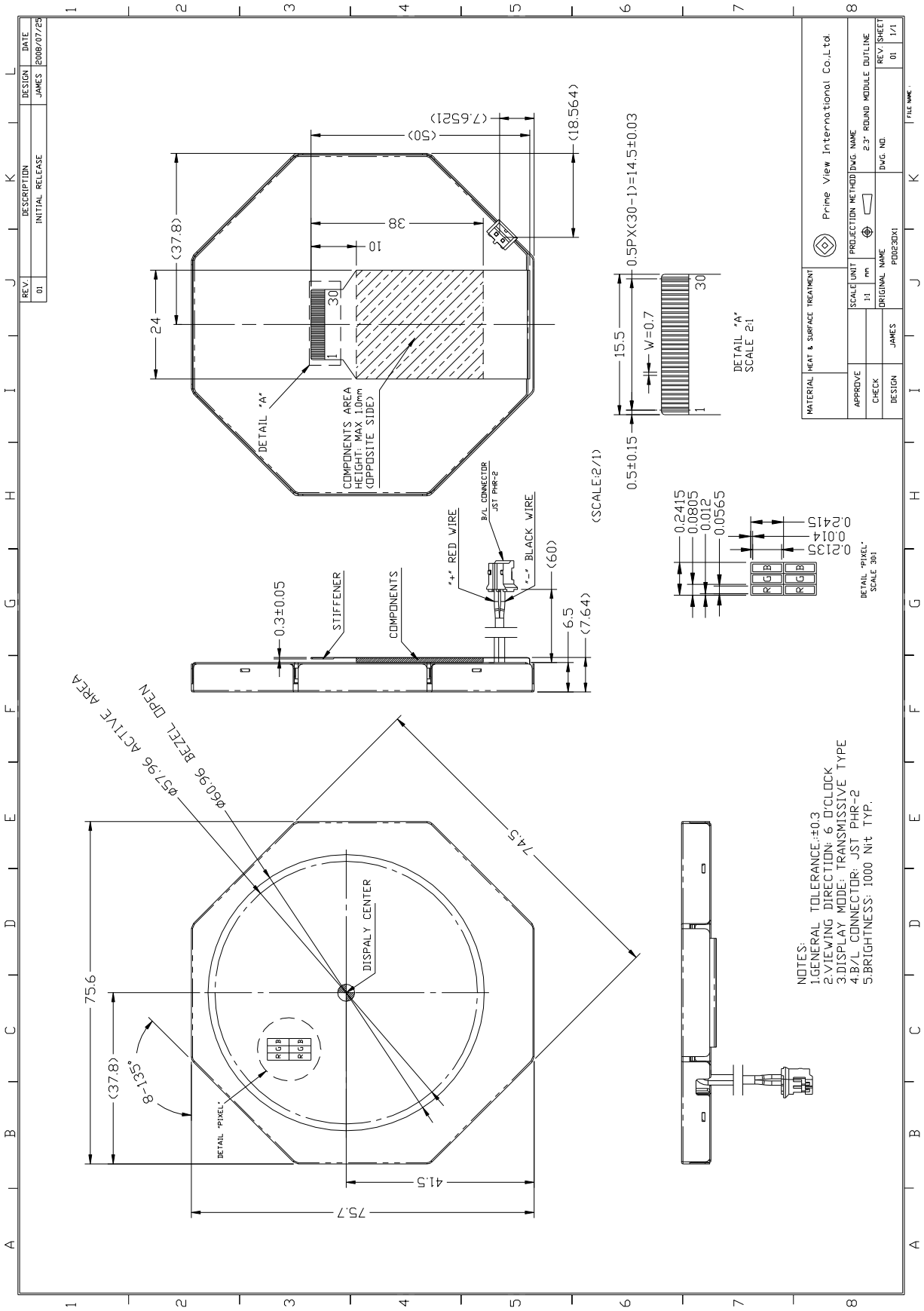

The information contained herein is the exclusive property of Prime View International Co., Ltd. and shall not be distributed, reproduced, or disclosed in whole or in part without prior written permission of Prime View International Co., Ltd.

5. Input / Output Terminals :

LCD Module Connector
FPC Down Connect, 30 Pins

Pin No.	Signal	Pin Function	Remark
1	VSS	Ground	
2	VSS	Ground	
3	NRESET	Reset Input Pin	
4	Dummy	N.C.	
5	D15	Parallel Data Bus (R4)	
6	D14	Parallel Data Bus (R3)	
7	D13	Parallel Data Bus (R2)	
8	D12	Parallel Data Bus (R1)	
9	D11	Parallel Data Bus (R0)	
10	D10	Parallel Data Bus (G5)	
11	D9	Parallel Data Bus (G4)	
12	D8	Parallel Data Bus (G3)	
13	D7	Parallel Data Bus (G2)	
14	D6	Parallel Data Bus (G1)	
15	D5	Parallel Data Bus (G0)	
16	D4	Parallel Data Bus (B4)	
17	D3	Parallel Data Bus (B3)	
18	D2	Parallel Data Bus (B2)	
19	D1	Parallel Data Bus (B1)	
20	D0	Parallel Data Bus (B0)	
21	Dummy	N.C.	
22	NRD_E	Read Signal Pin	
23	NWR_RNW	Write Signal Pin	
24	DNC_SCL	Register Index or Register Command Select	
25	NCS	Chip Select Pin	
26	Dummy	N.C.	
27	VCI	Power Supply (Typ. 3.0V)	
28	VCI	Power Supply (Typ. 3.0V)	
29	VSS	Ground	
30	VSS	Ground	

The information contained herein is the exclusive property of Prime View International Co., Ltd. and shall not be distributed, reproduced, or disclosed in whole or in part without prior written permission of Prime View International Co., Ltd.

6. Absolute Maximum Ratings :

The followings are maximum values, which if exceeded, may cause faulty operation or damage to the unit.

VSS=GND=0V , Ta = 25℃

Item	Symbol	Value	Unit	Remark
Power supply voltage (1)	VCC, IOVCC	-0.3 to +4.6	V	Note 6-1 Note 6-2
Power supply voltage (2)	VCI	-0.3 to +4.6	V	Note 6-1 Note 6-3
Power supply voltage (3)	VLCD-VSSA	-0.3 to +6.5	V	Note 6-1 Note 6-4
Power supply voltage (4)	VSSA-VCL	-0.3 to +4.6	V	Note 6-1 Note 6-5
Drive Supply Voltage	VGH-VGL	32	V	Note 6-1 Note 6-6
Input Voltage Range	V_{IN}	-0.3 to IOVCC+0.3	V	Note 6-1
Output Voltage Range	V_O	-0.3 to IOVCC+0.3	V	Note 6-1

Note 6-1 : VCC,VSSD must be maintained, VSSD=VSSA=0V
Note 6-2 : Make sure VCC≧VSSD, IOVCC≧VSSD
Note 6-3 : Make sure VCI≧VSSA
Note 6-4 : Make sure VLCD≧VSSA
Note 6-5 : Make sure VSSA≧VCL
Note 6-6 : Make sure VGH≧VSSA and VSSA≧VGL

The information contained herein is the exclusive property of Prime View International Co., Ltd. and shall not be distributed, reproduced, or disclosed in whole or in part without prior written permission of Prime View International Co., Ltd.

7. Electrical Characteristics：

7-1 Operation condition：

VSS=GND=0V , Ta = 25℃

Item	Symbol	Value	Unit	Remark
Power supply voltage (1)	VCI-VSS	3±0.2	V	Note 7-1
Power supply voltage (2)	VLCD-VSS	4.63	V	
Power supply voltage (3)	VSS-VCL	2.67	V	
Power supply voltage (4)	VLCD-VCL	7.3	V	
Power supply voltage (5)	VGH-VSS	13.7	V	
Power supply voltage (6)	VSS-VGL	10.21	V	
TFT Common Electrode Voltage	VCOMH	3. 6	V	Note 7-2
	VCOML	-0.71	V	
Coupling voltage	Δ Vp	0.82	V	
Black of Video Low Voltage	VLB	0.24	V	Note 7-3
Black of Video High Voltage	VHB	4.24	V	
White of Video Low Voltage	VLW	0.2	V	
White of Video High Voltage	VHW	4.18	V	

Note 7-1：The VCI 3±0.2V is base on item 11-2 setting, if out of range, will be have some display abnormal

Note 7-2：VCOM must be adjusted optimize display quality, crosstalk, contrast ration and etc.

Note 7-3：

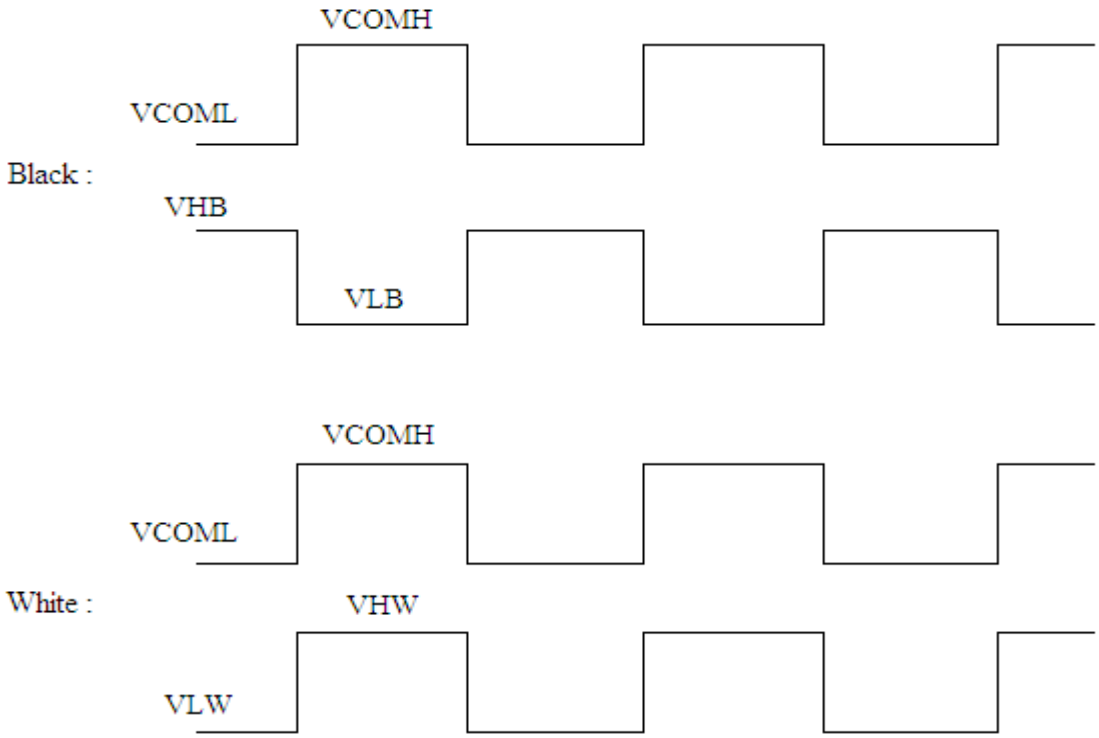

The information contained herein is the exclusive property of Prime View International Co., Ltd. and shall not be distributed, reproduced, or disclosed in whole or in part without prior written permission of Prime View International Co., Ltd.

7-2 Power consumption :

Parameter	Symbol	Min	TYP	MAX	Unit	Remark
Supply voltage of LED backlight	V_{LED}	-	-	(7.6)	V	Note 7-4
Supply current of LED backlight	I_{LED}	-	150	-	mA	Note 7-5
Backlight Power Consumption	P_{LED}	-	-	1140	mW	Note 7-6

Note 7-4 : The I_{LED}=150 mA (Constant current)
Note 7-5: LED B/L applied information
Note 7-6: $P_{LED} = V_{LED} * I_{LED}$.

Parameter	Symbol	Conditions	TYP.	MAX.	Unit	Remark
Supply current for source driver and gate driver	I_{CI}	V_{CI} = 3.0V	11.7	17.6	mA	
Backlight Power Consumption	P_{LED}	-	-	1140	mW	
Total power consumption	-	-	-	1192.8	mW	

8. Pixel Arrangement :

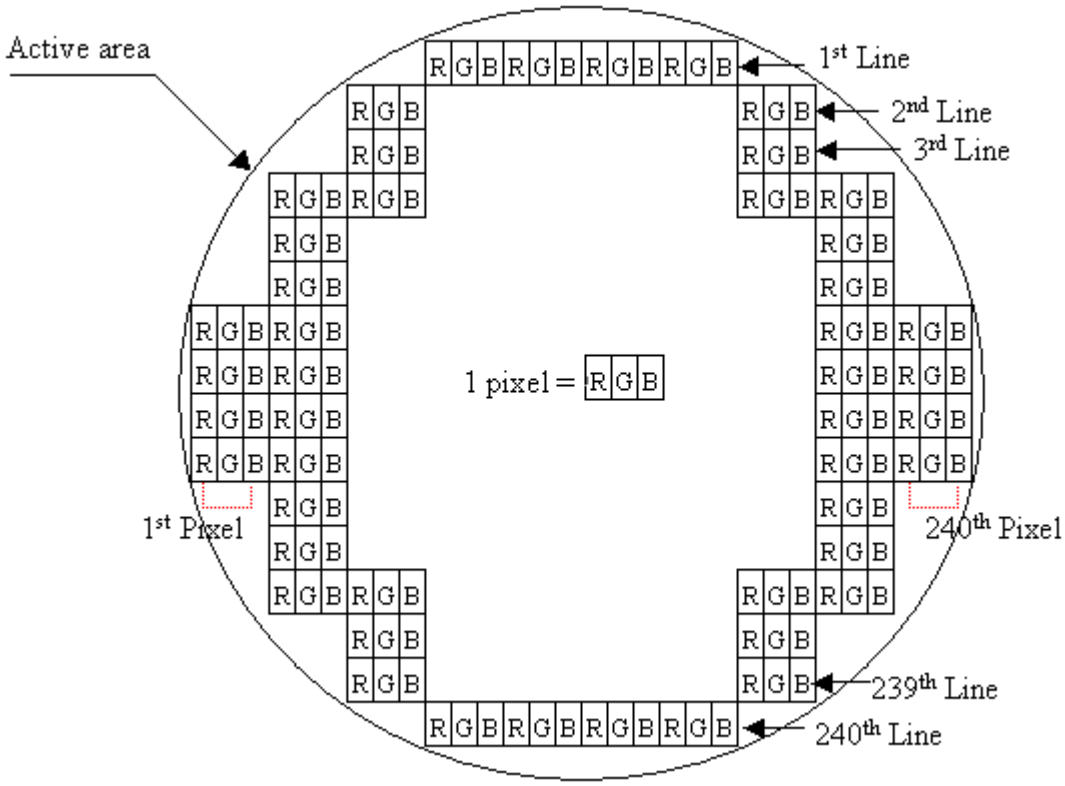

The information contained herein is the exclusive property of Prime View International Co., Ltd. and shall not be distributed, reproduced, or disclosed in whole or in part without prior written permission of Prime View International Co., Ltd.

9. Block Diagram：

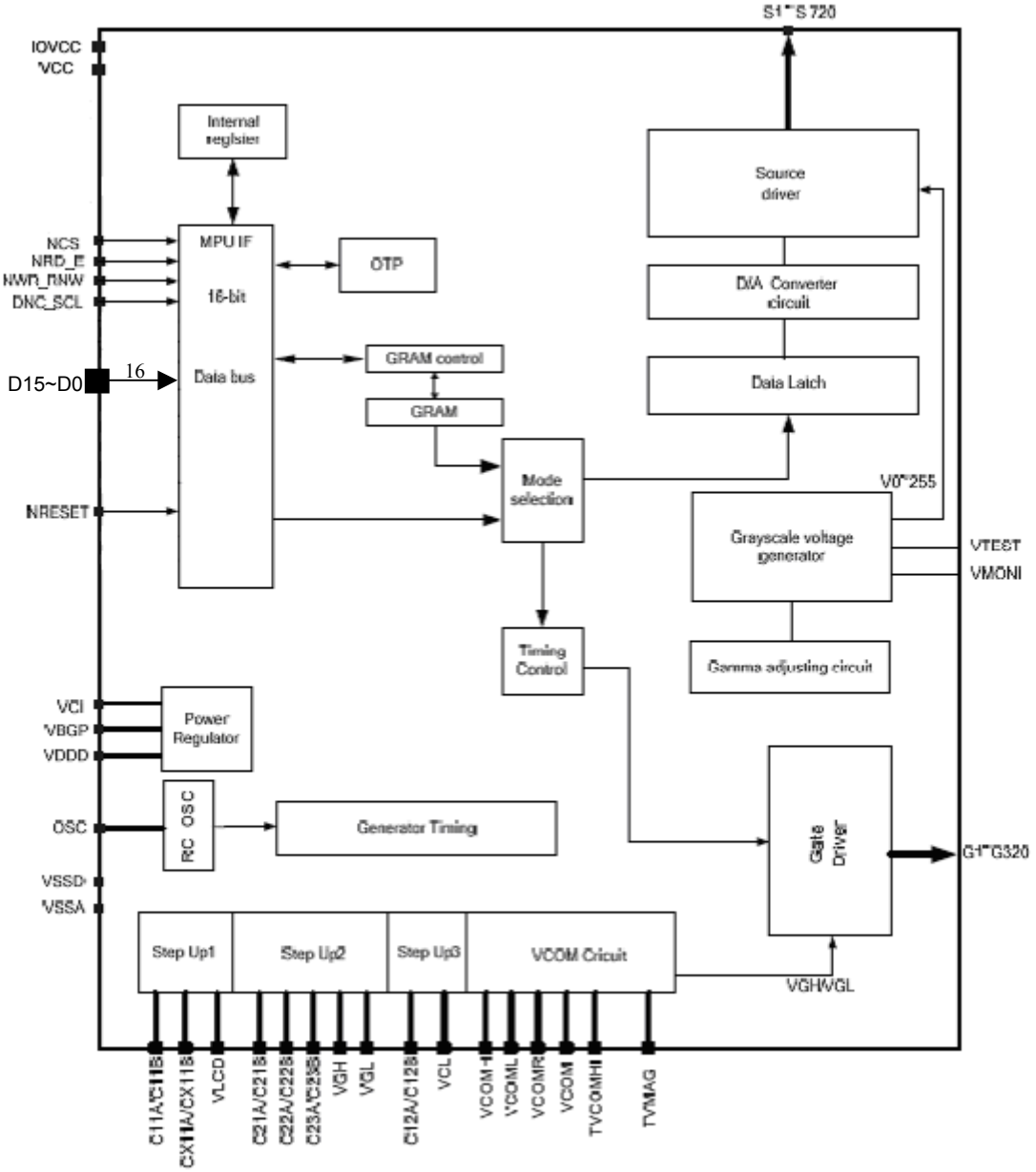

The information contained herein is the exclusive property of Prime View International Co., Ltd. and shall not be distributed, reproduced, or disclosed in whole or in part without prior written permission of Prime View International Co., Ltd.

10. Timing specification：

10-1. 80-system Bus Operation：

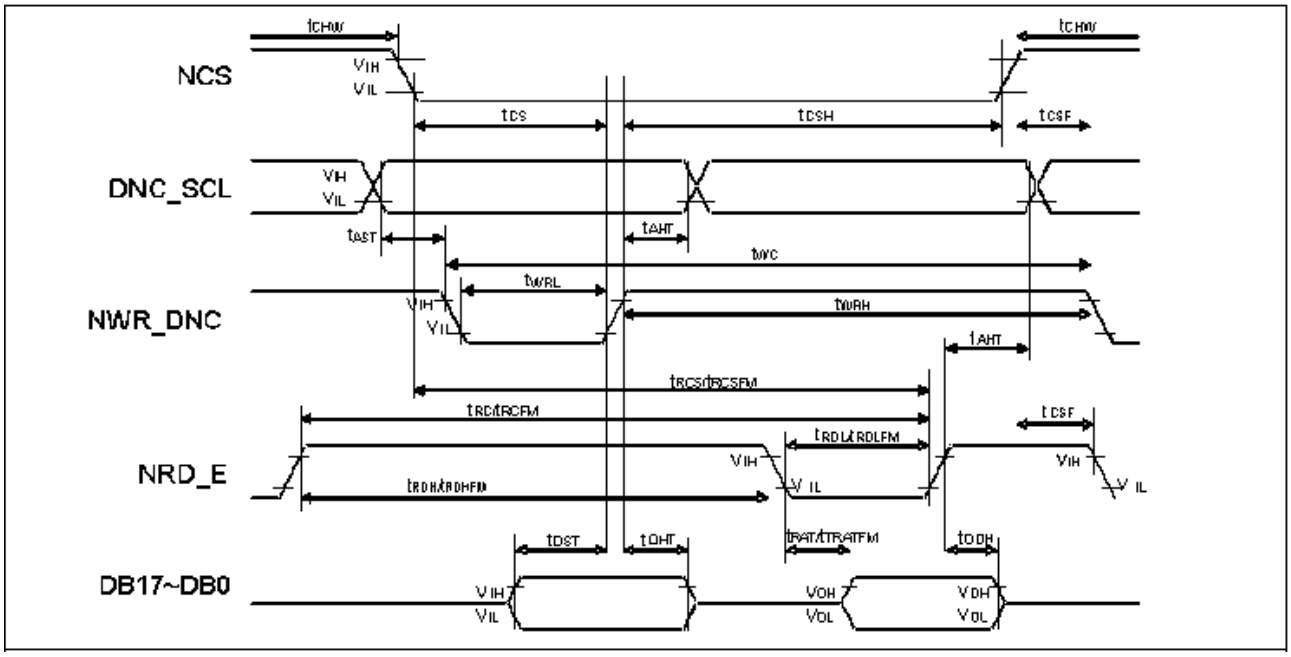

10-2. AC Characteristics：

10-2.1 80-system Bus Interface Timing Characteristics：

Table.10-2.1 80-System Normal Write Mode (HWM =0)/ (VCI=3V)

DNC_SCL	tAST	Address setup time	10	-	ns
	tAHT	Address hold time(Write/Read)	10	-	
NCS	tCHW	Chip select "H" pulse width	0	-	ns
	tCS	Chip select setup time(Write)	35	-	
	tRCSFM	Chip select setup time	355	-	
	tCSF	Chip select wait time(Write/Read)	10	-	
	tCSH	Chip select hold time	10	-	
NWR_RNW	tWC	Write cycle	100	-	ns
	tWRH	Control pulse "H" duration	35	-	
	tWRL	Control pulse "L" duration	35	-	
NRD_E	tRCFM	Read cycle	450	-	ns
	tRDHFM	Control pulse "H" duration	90	-	
	tRDLFM	Control pulse "L" duration	355	-	
D17 to D0	tDST	Data setup time	15	-	ns
	tDHT	Data hold time	10	-	
	tRATFM	Read access time	-	340	
	tODH	Output disable time	20	80	

The information contained herein is the exclusive property of Prime View International Co., Ltd. and shall not be distributed, reproduced, or disclosed in whole or in part without prior written permission of Prime View International Co., Ltd.

11. Interface specification :

11-1. 16-bit bus interface :

The 80-system 16-bit bus parallel data transfer can be used by setting M3-0 pins to " 0010" .

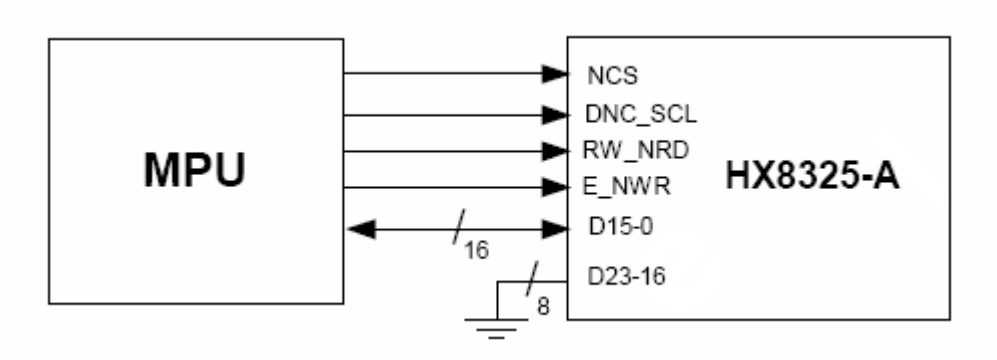

Figure.11-1-2 A Example of 80-System 16-bit Interface

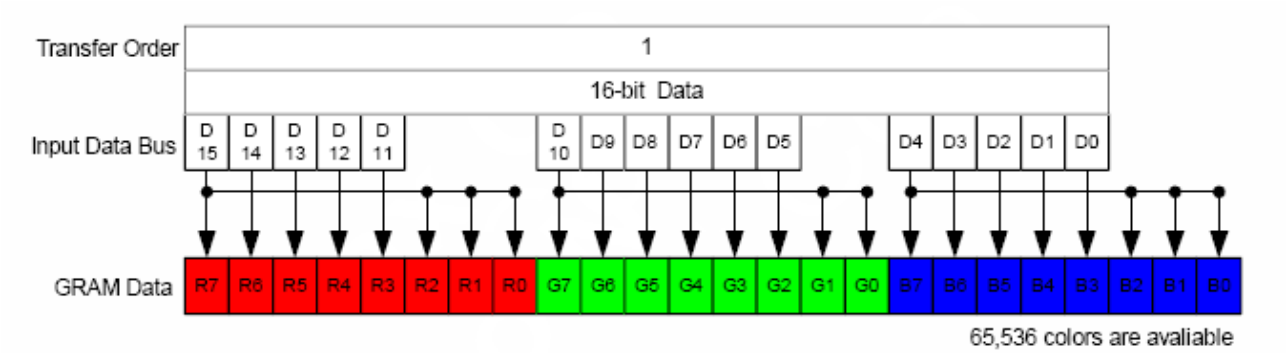

Figure.11-1-2 B Data Format of 16-bit bus System Interface

The information contained herein is the exclusive property of Prime View International Co., Ltd. and shall not be distributed, reproduced, or disclosed in whole or in part without prior written permission of Prime View International Co., Ltd.

11-2. Display on Flow：

Power on
VCI = 3V

↓

RESET
reset = 0
Delay 1ms
Reset = 1

↓

Gamma control setting
IR46 = 0x0000
IR47 = 0x0000
IR48 = 0x0034
IR49 = 0x0034
IR4A = 0x0034
IR4B = 0x0034
IR4C = 0x0034
IR4D = 0x0034
IR4E = 0x0010
IR4F = 0x0020
IR50 = 0x0020
IR51 = 0x0040

↓

Display control setting
IR01 = 0x0006
IR16 = 0x0018
IR23 = 0x0095
IR24 = 0x0095
IR25 = 0x00FF
IR28 = 0x0002
IR29 = 0x0002
IR2A = 0x0002
IR2B = 0x0002
IR2C = 0x0002
IR2D = 0x0002
IR3A = 0x0001
IR3B = 0x0001
IR3C = 0x00F0
IR3D = 0x0000
Delay 50ms

↓

Power control setting
IR19 = 0x007B
Delay 50ms
IR20 = 0x0040
IR1D = 0x0047
IR1E = 0x0000
IR1F = 0x0003
Delay 50ms
IR44 = 0x0060
IR45 = 0x0010
Delay 50ms
IR1C = 0x0004
IR1B = 0x0018
Delay 50ms
IR1B = 0x0010
Delay 50ms
IR43 = 0x0080
Delay 50ms

↓

Display on setting
IR30 = 0x0008
Delay 50ms
IR26=0x0004
Delay 50ms
IR26=0x0024
IR26=0x002C
Delay 50ms
IR26=0x003C
IR30=0x002a
IR32=0x003C
IR33=0x0078
IR34=0x007A
IR35=0x0038
IR36=0x0078
IR40=0x000F
IR41=0x00F0

The information contained herein is the exclusive property of Prime View International Co., Ltd. and shall not be distributed, reproduced, or disclosed in whole or in part without prior written permission of Prime View International Co., Ltd.

12. Optical Characteristics：

Ta=25℃

Parameter		Symbol	Condition	MIN.	TYP.	MAX.	Unit	Remarks
Viewing Angle	Horizontal	Θ11、Θ12	CR≥ 10	70	75	-	deg	Note 12-1
	Vertical	Θ22		45	50	-	deg	
		Θ21		65	70	-	deg	
Contrast Ratio		CR	At optimized view angle	200	400	-	-	Note 12-2
Brightness		L	Θ =0°	800	1000		cd/㎡	Note 12-4
Uniformity		U%	Θ =0°	70	75	-	%	Note 12-5
Response time	Rise	Tr	Θ =0°	-	15	20	ms	Note 12-3
	Fall	Tf		-	20	30	ms	
White Chromaticity		x	Θ =0°	0.29	0.33	0.37	-	
		y		0.31	0.35	0.39	-	
LED Life Time		-	+ 25℃	20000	30000	-	hrs	Note 12-6

Note 12-1: The definitions of viewing angles are as follow

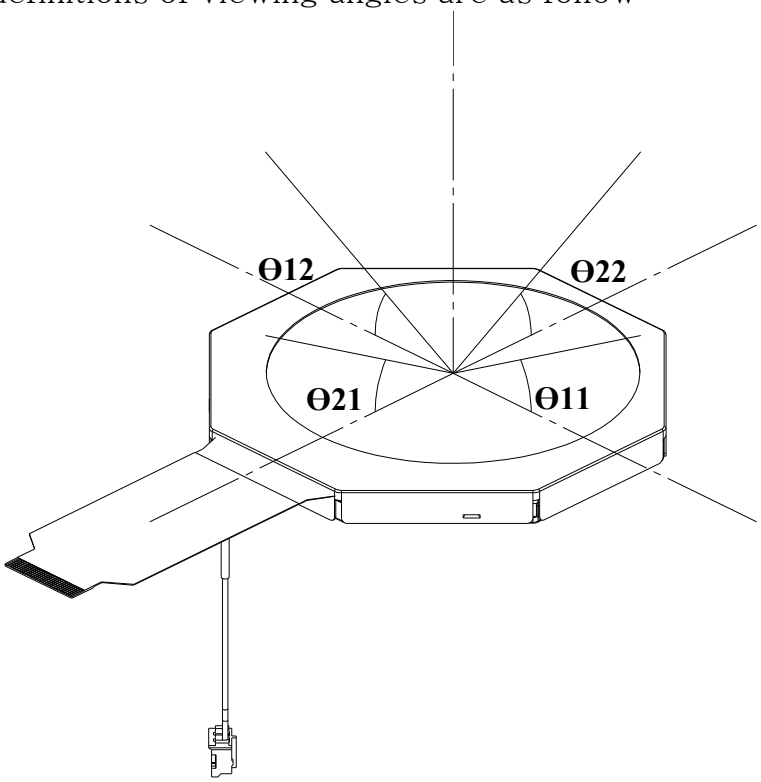

The information contained herein is the exclusive property of Prime View International Co., Ltd. and shall not be distributed, reproduced, or disclosed in whole or in part without prior written permission of Prime View International Co., Ltd.

Note 12-2: The definition of contrast ratio : $CR = \frac{\text{Luminance at White Pattern}}{\text{Luminance at Black Pattern}}$

Note 12-3: Definition of Response Time Tr and Tf :

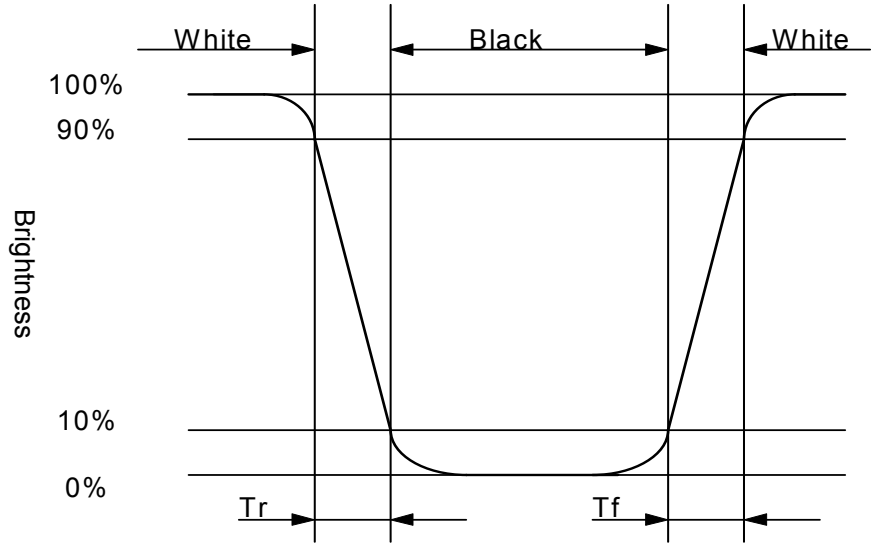

Note 12-4: All optical measurements shall be performed after backlight being turned-on for 30 mins. The optical characteristics shall be measured in dark room (ambient illumination on panel surface less than 1 Lux). The measuring configuration shows as following figure.

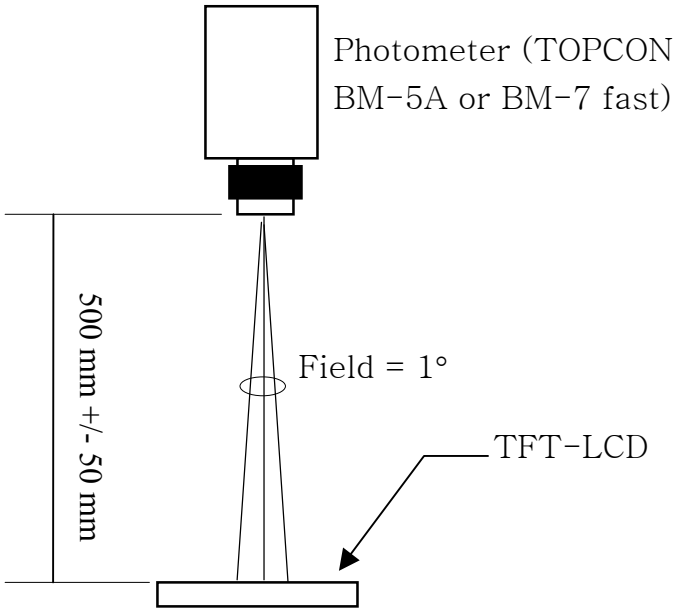

Optical characteristics measuring configuration

The information contained herein is the exclusive property of Prime View International Co., Ltd. and shall not be distributed, reproduced, or disclosed in whole or in part without prior written permission of Prime View International Co., Ltd.

Note 12-5 : The uniformity of LCD is defined as

$$U = \frac{\text{The Minimum Brightness of the 9 testing Points}}{\text{The Maximum Brightness of the 9 testing Points}}$$

Luminance meter : BM-5A or BM-7 fast (TOPCON)

Measurement distance : 500 mm +/- 50 mm

Ambient illumination : < 1 Lux

Measuring direction : Perpendicular to the surface of module

The test pattern is white

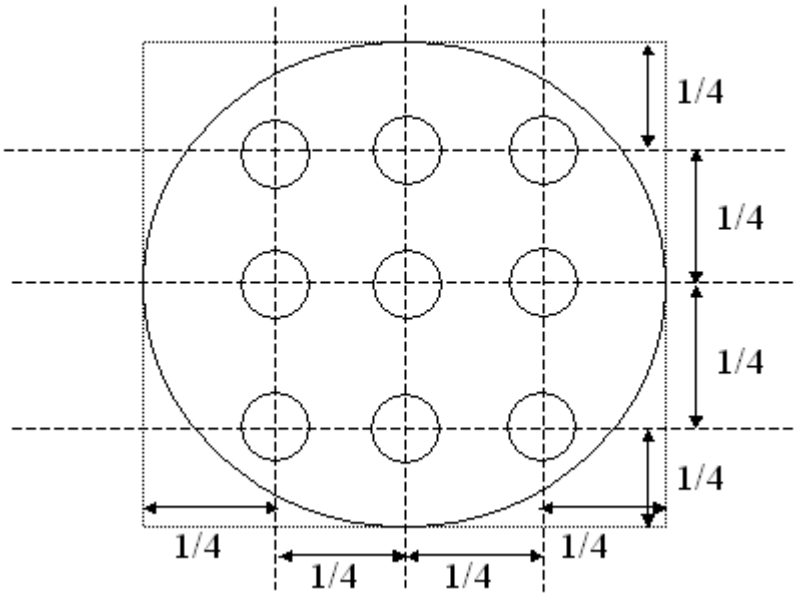

Note 12-6:The " LED Life time " is defined as the module brightness decrease to 50% original Brightness that the ambient temperature is 25℃ and I_{LED} = 150mA.

The information contained herein is the exclusive property of Prime View International Co., Ltd. and shall not be distributed, reproduced, or disclosed in whole or in part without prior written permission of Prime View International Co., Ltd.

13. Handling Cautions :

13-1) Mounting of module :

a) Please power off the module when you connect the input/output connector.

b) Polarizer which is made of soft material and susceptible to flaw must be handled carefully.

c) Protective film (Laminator) is applied on surface to protect it against scratches and dirt.

d) Please following the tear off direction as figure 13-1 to remove the protective film as slowly as possible, so that electrostatic charge can be minimized.

13-2) Precautions in mounting :

a) When metal part of the TFT-LCD module (shielding lid and rear case) is soiled, wipe it with soft dry cloth.

b) Wipe off water drops or finger grease immediately. Long contact with water may cause discoloration or spots.

c) TFT-LCD module uses glass which breaks or cracks easily if dropped or bumped on hard surface. Please handle with care.

d) Since CMOS LSI is used in the module. So take care of static electricity and earth yourself when handling.

13-3) Adjusting module

a) Adjusting volumes on the rear face of the module have been set optimally before shipment.

b) Therefore, do not change any adjusted values. If adjusted values are changed, the specifications described may not be satisfied.

13-4) Others :

a) Do not expose the module to direct sunlight or intensive ultraviolet rays for many hours.

b) Store the module at a room temperature place.
As open the packing, must assembly within 3 month

c) The voltage of beginning electric discharge may over the normal voltage because of leakage current from approach conductor by to draw lump read lead line around.

d) If LCD panel breaks, it is possibly that the liquid crystal escapes from the panel. Avoid putting it into eyes or mouth. When liquid crystal sticks on hands, clothes or feet. Wash it out immediately with soap.

e) Observe all other precautionary requirements in handling general electronic components.

13-4) Polarizer mark :

The polarizer mark is to describe the direction of wide view angle film how to mach up with the rubbing direction.

The information contained herein is the exclusive property of Prime View International Co., Ltd. and shall not be distributed, reproduced, or disclosed in whole or in part without prior written permission of Prime View International Co., Ltd.

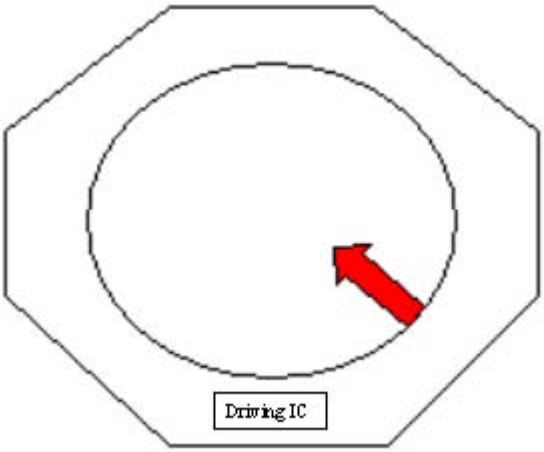

Figure 13-1 the way to peel off protective film

The information contained herein is the exclusive property of Prime View International Co., Ltd. and shall not be distributed, reproduced, or disclosed in whole or in part without prior written permission of Prime View International Co., Ltd.

14. Reliability Test：

No	Test Item	Test Condition	Remark
1	High Temperature Storage Test	Ta = 85℃, 240 hrs	
2	Low Temperature Storage Test	Ta = -40℃, 240 hrs	
3	High Temperature Operation Test	Ta = 80℃, 240 hrs	
4	Low Temperature Operation Test	Ta = -30℃, 240 hrs	
5	High Temperature & High Humidity Operation Test	Ta = 60℃, 95%RH, 240 hrs (No Condensation)	
6	Thermal Cycling Test (non-operating)	-30℃ → +80℃, 200 Cycles 30 mins 30 mins	
7	Vibration Test (non-operating)	Frequency：10 ~ 55 H_Z Amplitude：1 mm Sweep time：11 mins Test Period：6 Cycles for each direction of X, Y, Z	
8	Shock Test (non-operating)	100G , 6ms Direction： ±X , ±Y , ±Z Cycle：3 times	
9	Electrostatic Discharge Test (non-operating)	200pF , 0Ω ±200V 1 time / each terminal	

Ta：ambient temperature

[Criteria]
In the standard conditions, there is not display function NG issue occurred. (including：line defect ,no image)All the cosmetic specification is judged before the reliability stress.

The information contained herein is the exclusive property of Prime View International Co., Ltd. and shall not be distributed, reproduced, or disclosed in whole or in part without prior written permission of Prime View International Co., Ltd.

15. Packing：

REV.	DESCRIPTION	DESIGN	DATE
01	INITIAL RELEASE	JAMES	2008/07/30

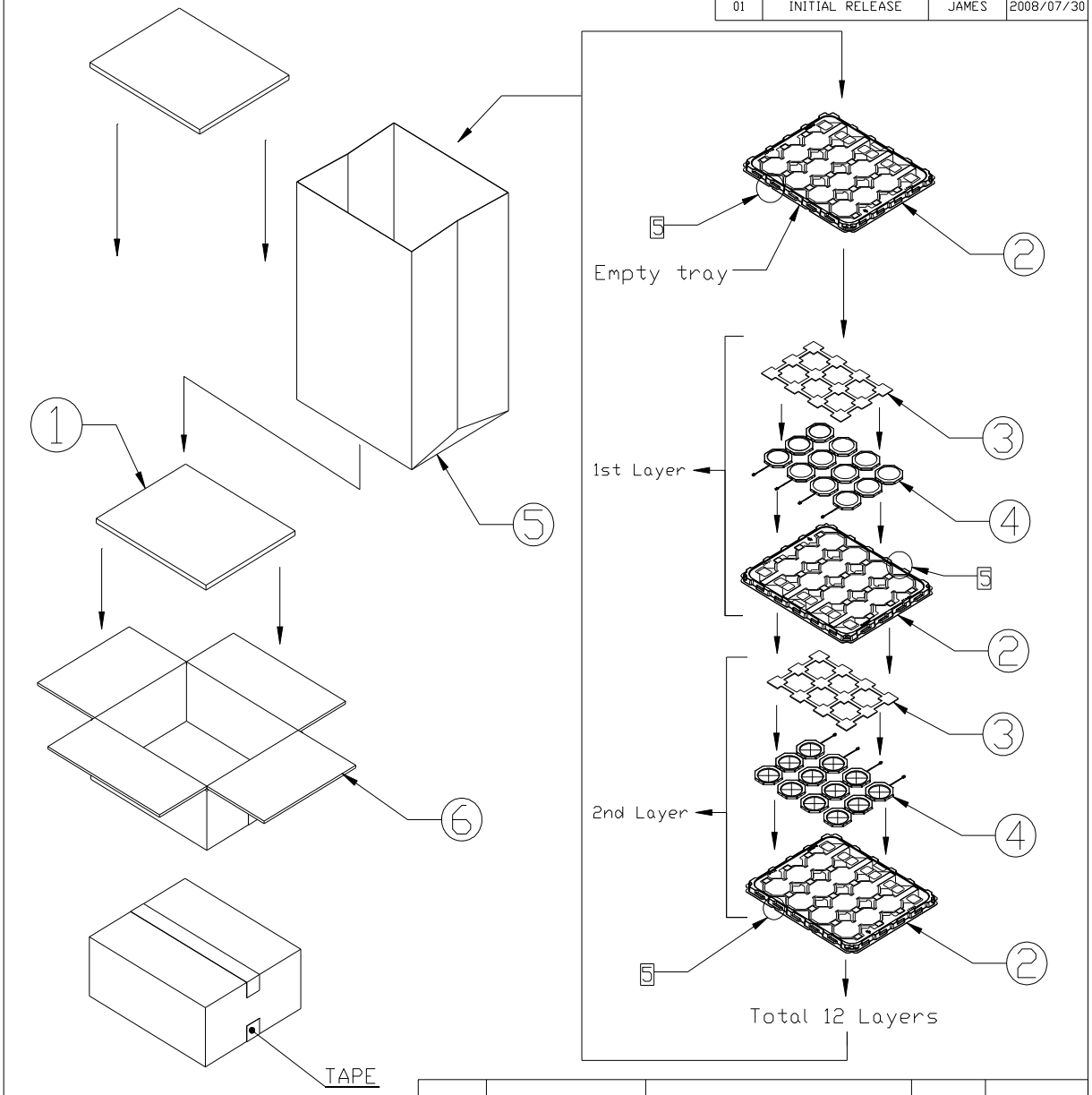

NOTE:
1. ONE LAYER INCLUDE:1 PIECE OFCUSHION SHEET, 12 PCS MODULE & 1 PIECE OF TRAY.
2. Q'TY:84 PCS PANEL/CARTON.
3. DIMENSION: 455*375*190mm.
4. WEIGHT: 6.0 Kg.
5. TRAY 需180交叉堆疊，疊堆後可從側邊檢視圓弧防呆方向是否正確

ITEM	PART NO.	DESCRIPTION	Q'ty	REMARK
6	50-0100091	CARTON INTERNAL	1	
5	50-0500041	摺口袋 450*380*700mm	1	抗靜電
4		PO023OX1	84	
3	50-0210126	EPE CUSHION SHEET	7	抗靜電
2	50-0312101	TRAY	8	抗靜電
1	50-0300491	EPE FOAM	2	

MTL.SPEC.	UNSPECIFIED TOL.	REMARK	元太科技股份有限公司 Prime View Internation Co.,ltd.
	ANGLE		
	ROUGHNESS		

APPROVE	FRANK SHIN	SCALE	UNIT	SHEET	DWG.TITLE
CHECK	FRANK SHIN			1 OF 2	2.3″ ROUND MODULE PACKING DRAW
DESIGN	JAMES	MTL.NO. PO023OX1		DWG.NO.	REV. 01 / A4 SIZE

The information contained herein is the exclusive property of Prime View International Co., Ltd. and shall not be distributed, reproduced, or disclosed in whole or in part without prior written permission of Prime View International Co., Ltd.