Date: May 14, 2007

Specification for Approval

Customer	**AIGO**
Product Name	**-**
Model Name	**AMBB004**
Description	**2.2" AMOLED QVGA 262K Color**

Supplier's Proposal			Customer's Approval
Issued by	Checked by	Approved by	
Giljae, Choi	Keewon, Kwon	Suengin, Kang	

This document contains information on a product under plan.
Contents in this document are subject to change after prior notice to the customer. No part of this document may be reproduced or transmitted to third party (all persons and companies except the customer mentioned above) in any form or by any means, electronic or mechanical, for any purpose, without written permission of Samsung SDI.

- Revision History -

Date	Rev. No.	Contents	Remark
May. 14, '07	0	Original Issued (Tentative Specification)	-

SAMSUNG SDI CO., LTD.(All Rights Reserved).

- C o n t e n t s -

1. Scope..... 5

2. Warranty..... 5

3. Features..... 5

4. Product Specification..... 6
   4-1. Mechanical Specifications..... 6
   4-2. Absolute Maximum Ratings..... 6
   4-3. Recommended Operating Sequence..... 5
   4-4. Electrical Characteristics..... 7
   4-5. Optical Characteristics..... 7

5. Interface Specification..... 10
   5-1. I/O Connection..... 10
   5-2. System Block Diagram..... 11
   5-3. Timing Diagram and AC Characteristics..... 12
   5-4. Recommended Operating Sequence..... 14

6. Quality Level and Inspection Criteria..... 19
   6-1. AQL..... 19
   6-2. Inspection Criteria..... 19

7. Reliability..... 21

8. Handling Precautions..... 22
   8-1. Mounting Method..... 22
   8-2. Cleaning..... 22
   8-3. Static Discharge..... 22
   8-4. Safekeeping..... 22
   8-5. Operating Precaution..... 22
   8-6. Storage..... 23
   8-7. Safety..... 23
   8-8. Employing Limit Sample..... 23

9. Drawings..... 24

10. Analysis Report for Hazardous Substance..... 28

1. Scope

This specification applies to the AMOLED's single display module that is supplied by SAMSUNG SDI Co. Ltd. (hereinafter referred to as "SDI") and whose model name and descriptions are specified on the cover-page.
If any unexpected problems and/or unspecified features occur, SDI shall negotiate in order to reach a solution with the customer.

2. Warranty

SDI warrants that at the time of sale the products will, in all material respects, conform to the then applicable version of this specification and will be free from defects in material and manufacture. SDI further warrants that the products will, with recommended maintenance and without being subjected to extraordinary or abnormal use or abuse (e.g., careless handling, assembling without ESD protection, or repairing without SDI's agreement), remain serviceable for fifteen months from the date that the product is shipped from SDI. Any modification made to products will void the warranty unless the modifications are approved in writing by SDI in advance of the change.

This exclusion does not apply to normal installation of approved accessories. This warranty shall not apply to equipment that has been (1) improperly installed or installed contrary to instructions; (2) subjected to negligence, accident, vandal-ism, or disasters such as flood, fire, or war; or (3) damaged through improper operation, maintenance, storage or abnormal use or abuse. THIS IS THE ONLY WARRANTY GIVEN BY SDI AND IS IN PLACE OF ALL OTHERS. This warranty supersedes any prior, contrary or additional representations, whether oral or written. SDI DISCLAIMS AND EXCLUDES ALL OTHER WARRANTIES—WHETHER EXPRESS, IMPLIED, OR STATUTORY—INCLUDING ANY **WARRANTY OF MERCHANTABILITY**, ANY **WARRANTY OF FITNESS FOR A PARTICULAR PURPOSE**, AND ANY IMPLIED WARRANTIES OTHERWISE ARISING FROM COURSE OF DEALING, COURSE OF PERFORMANCE, OR USAGE OF TRADE.

3. Features

Items	Main (AMOLED)	Remark
Pixel Driving	Active Matrix Type	
Display Resolution	240(W) * RGB * 320(H)	
Display Size (Active Area)	2.22" (33.84(W) * 45.12(H))	
Color Capability	262K Colors R(2^6) * G(2^6) * B(2^6)	
Polarizer	Glare Type	
Display Driver	COG Type (S6E63D3)	
Display Memory Size	1,382,400 bits(240*320*6bits)	
Power Supply	2.8V(Analog) 3.8V(Display)	Built-in DC/DC Converter to Drive AMOLED
Interface	18-bit parallel data interface from CPU	

4. Product Specifications

4.1. Mechanical Specifications

Item	Specifications	Unit
Dimensional Outline (typ.)	38.54(W) * 54.41(H)(typ.)	mm
Number of Dots	240(W) * 320(H)	Dots
Viewing Area	34.84(W) * 46.12(H)	mm
Active Area	33.84(W) * 45.12(H)	mm
Pixel Pitch	0.141(W) * 0.141(H)	mm
Dot Size	0.047(W) * 0.141(H) * RGB	mm

4.2. Absolute Maximum Ratings

Item		Symbol	Min.	Max.	Unit	Note
Supply Power	Analog Voltage	VCI	-0.3	+4.6	VDC	(1), (2)
	Display Voltage	VBAT	-0.3	+5.5	VDC	(1), (2)
Signal Input Voltage		VIN	-0.3	VCI+0.3	VDC	(2)
Operating Temperature		Topr	-20	60	℃	-
Operating Humidity		Hopr	10	90	%(RH)	-
Polarizer Surface Hardness		-	-	(3H)	-	-
Storage Temperature		Tstg	-30	70	℃	-
Storage Humidity		Hstg	10	90	%RH	(3)

Note (1) VCI and VBAT must satisfy the condition of VCI, Vbat > VSS (GND).

Note (2) If the supply voltage exceeds the maximum rating, the LSI can be damaged permanently. Therefore, while operating, a user must keep the supply voltage within maximized electrical limitation.
If not, LSI can cause decreased reliability or operational problems.

Note (3) Wet bulb temperature should not exceed 29 at most and not have any dew condensation.

4.3. Recommended Operating Conditions

Item		Symbol	Min.	Typ.	Max.	Unit
Supply Power	Analog Voltage	VCI	2.66	2.8	2.94	VDC
	Display Voltage	VBAT	3.40	3.8	4.20	
Signal Input Voltage		VIN	0	-	VCI	VDC
Frame Frequency		fFRM	53	60	63	Hz
Operating Temperature		Topr	0	25	50	℃
Operating Humidity		Hopr	20	-	85	%RH

* Electrical parameters have to be specified at the connector point.

4.4. Electrical Characteristics

-. Test Conditions: VCI=2.8V, Vbat=3.8V, VSS=0V, Tamb=+25℃ unless otherwise specified

Item		Symbol	Test Condition	Min.	Typ.	Max.	Unit
Signal Input Voltage	"H" level	VIH	-	0.8*VCI	-	VCI	VDC
	"L" level	VIL	-	VSS	-	0.2*VCI	
Signal Output Voltage	"H" level	VOH	IOH = -0.1mA IOL = 0.1mA	VCI-0.5	-	VCI	VDC
	"L" level	VOL		VSS	-	0.5	
Leakage Current	Input	IIL	VIN=VCI or VSS	-1.0	-	+1.0	uA
	Output	IOL		-3.0	-	+3.0	uA
Display Supply Current (all dots are lit.)	AMOLED	Ibat	AMOLED on	-	150	200	mA
Analog Supply Current	AMOLED	IVCI	Normal Operation	-	3.5	6.25	mA
		Istby	Stand-by mode	-	50	60	uA

4.5 Optical Characteristics

-. Test Conditions: VCI=2.8V, Vbat=3.8V, VSS=0V, Φ=θ=0° ,Tamb=25℃ unless otherwise specified

Item	Symbol		Condition	Min.	Typ.	Max.	Unit	Note
Brightness	L		Normal (White Mode)	162	190	228	cd/m²	(1)
Uniformity	-		Normal (White Mode)	82	90		%	(1), (3)
Contrast Ratio	C/R		Φ=0°, θ=0°	2,000	-	-	-	(1), (4)
Color Coordinate (CIE1931)	White	x y	Φ=0°, θ=0°	0.230 0.260	0.280 0.310	0.330 0.360	-	(1), (2)
	Red	x y			(0.680) (0.320)		-	
	Green	x y			(0.205) (0.720)		-	
	Blue	x y			(0.135) (0.070)		-	
Life Time			100% Full White (Half period)	-	(16,000)	-	hrs	(5)

* Note (1) Example of Optical Measuring System

In case of using PR705 (Photo Research™): Sample Evaluation at Development Lab.

- * Measuring Angle = 90 +/-5°
- * Ambient Illumination = Dark Room (under 1 lux)
- * Measuring Distance = 50 +/-5cm
- * Aperture Size = 2°

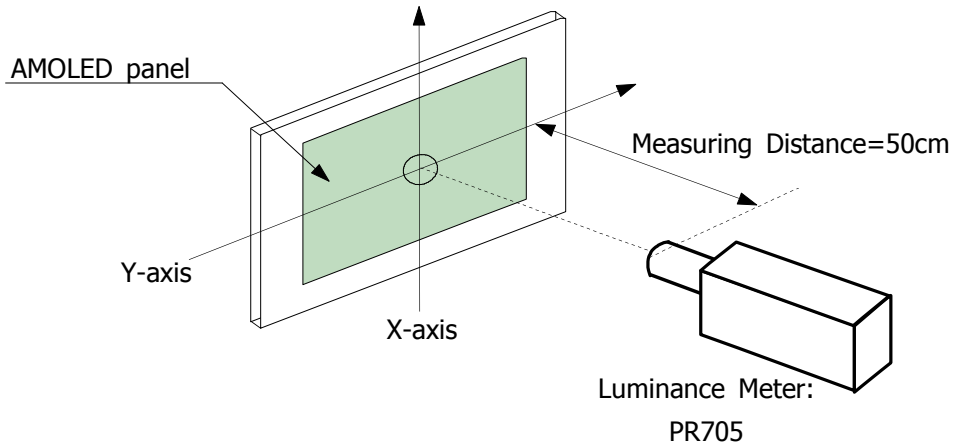

* Note (2) Definition of Φ, θ

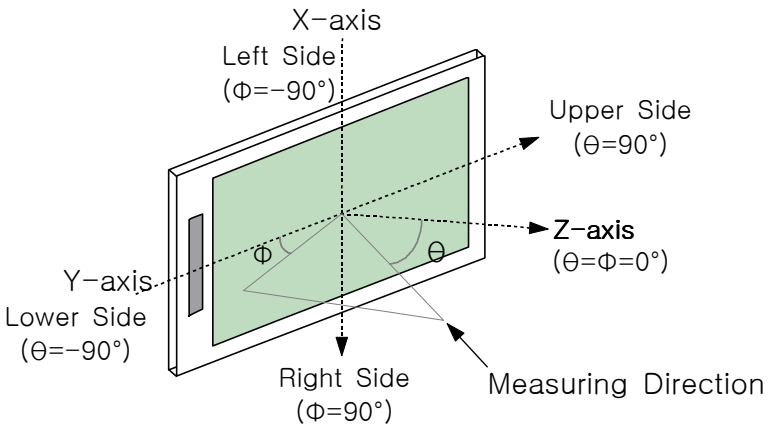

* Note (3) Uniformity Measuring Point

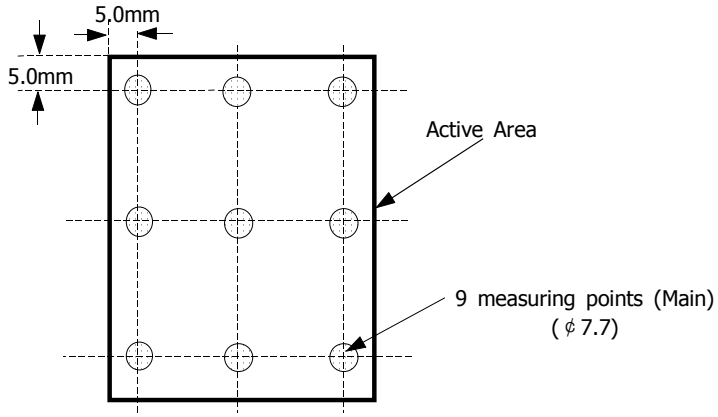

*** Uniformity = Lmin / Lmax * 100 [%]**

* Note (4) Definition of Contrast Ratio (C/R)

$$\text{Contrast Ratio (C/R)} = \frac{\text{Brightness of selected dot (White patterned area)}}{\text{Brightness of not selected dot (Black patterned area) at Typical Brightness}}$$

* Note (5) The "Life Time" is defined as being decreased the average time it takes for half level of the white brightness.

5. Interface Specifications

5.1. I/O Connection

Pin No.	Symbol	I/O	Pin Function
1,2	GND	Ground	Ground Terminal
3,4,5	VCI	Analog Power	Analog Power Terminal for Display Driver (2.8V)
6	D17	I/O	Data bus for system interface
7	RESETB	Input	Hardware Reset (0: reset, 1: normal operation)
8	CSB	Input	Chip Select (Low Active)
9	RDB	Input	Read Strobe Signal (Low Active)
10	RS	Input	Register Select (0: Index/Status, 1: Instruction parameter. GRAM data)
11	WRB	Input	Write Strobe Signal (Rising Edge Active)
12	EL_ON	Input	Enable Signal for DC/DC Converter
13	D15	I/O	Data bus for system interface
14	D11	I/O	Data bus for system interface
15	D16	I/O	Data bus for system interface
16	D12	I/O	Data bus for system interface
17	D10	I/O	Data bus for system interface
18	D13	I/O	Data bus for system interface
19	D7	I/O	Data bus for system interface
20	D14	I/O	Data bus for system interface
21	D8	I/O	Data bus for system interface
22	D5	I/O	Data bus for system interface
23	D9	I/O	Data bus for system interface
24	D6	I/O	Data bus for system interface
25	D1	I/O	Data bus for system interface
26	GND	Ground	Ground Terminal
27	D2	I/O	Data bus for system interface
28	GND	Ground	Ground Terminal
29	D3	I/O	Data bus for system interface
30,31	GND	Ground	Ground Terminal
32	D0	I/O	Data bus for system interface
33,34	VBAT	Display Power	Power Terminal for DC/DC Converter (3.8V)
35	D4	I/O	Data bus for system interface
36,37	GND	Ground	Ground Terminal
38	-	-	-
39,40	GND	Ground	Ground Terminal

5.2. System Block Diagram

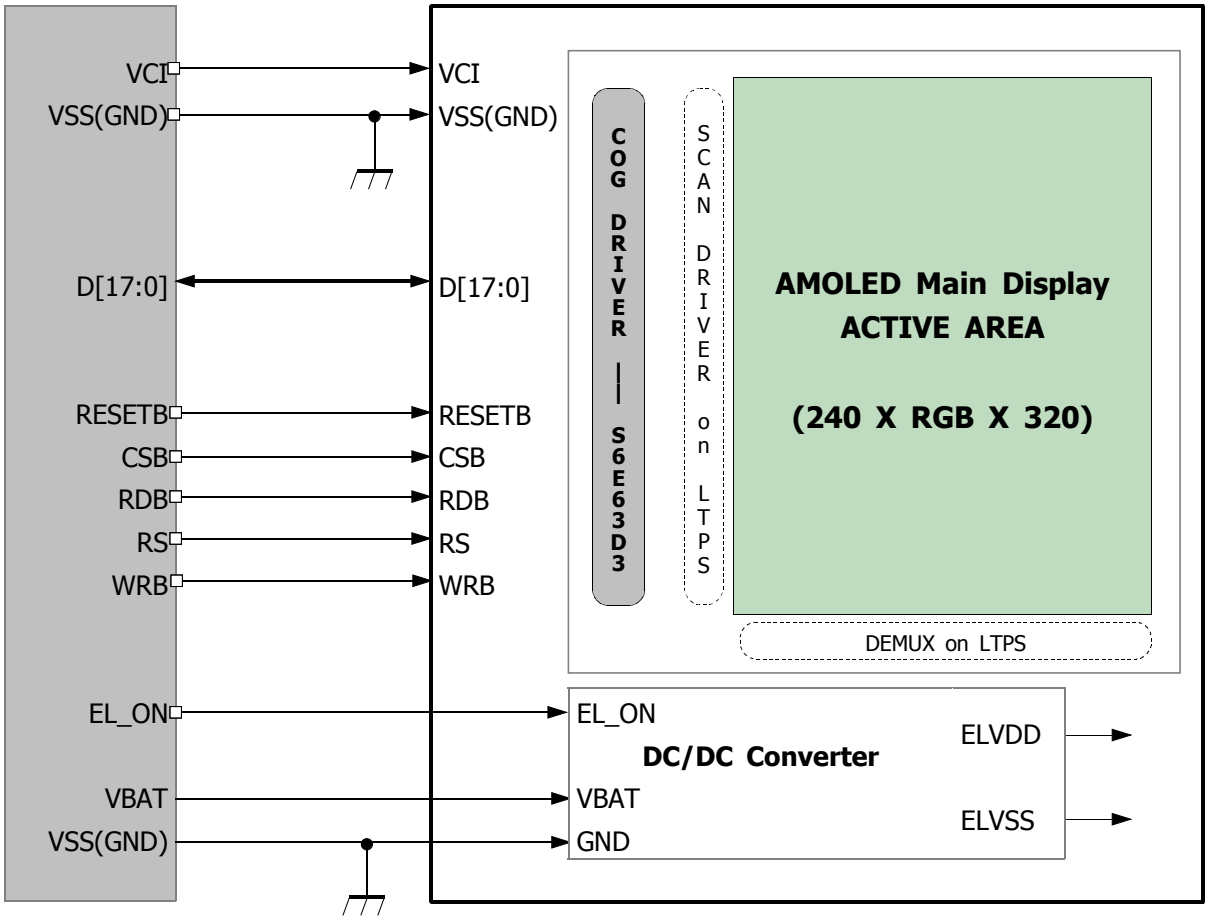

5.3. Timing Diagram and AC Characteristics

5-3-1. Data Format for i80-18bit CPU

* Bit Assignment of Instructions on i80-18bit CPU Interface

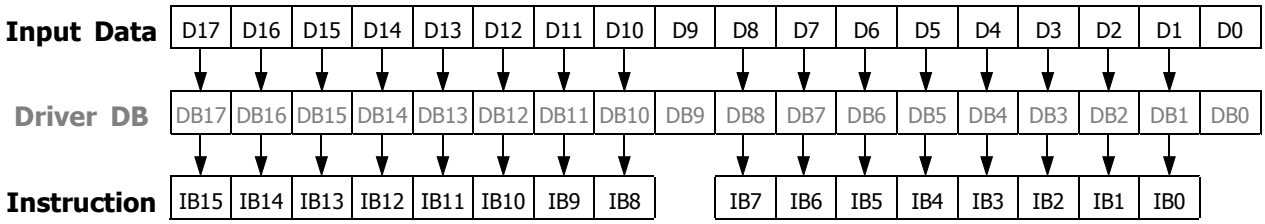

* Bit Assignment of GRAM Data on i80-18bit CPU Interface

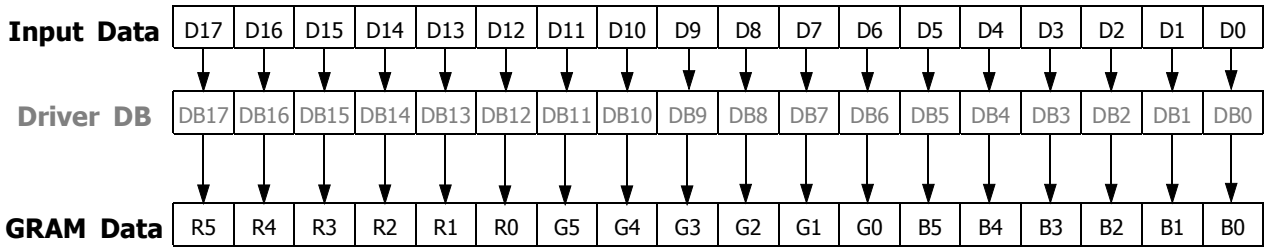

* Timing: There are 4 mode i80-18bit CPU interface as following:
1)Index Write, 2)Data Write, 3)Data Read, 4)Status Read.

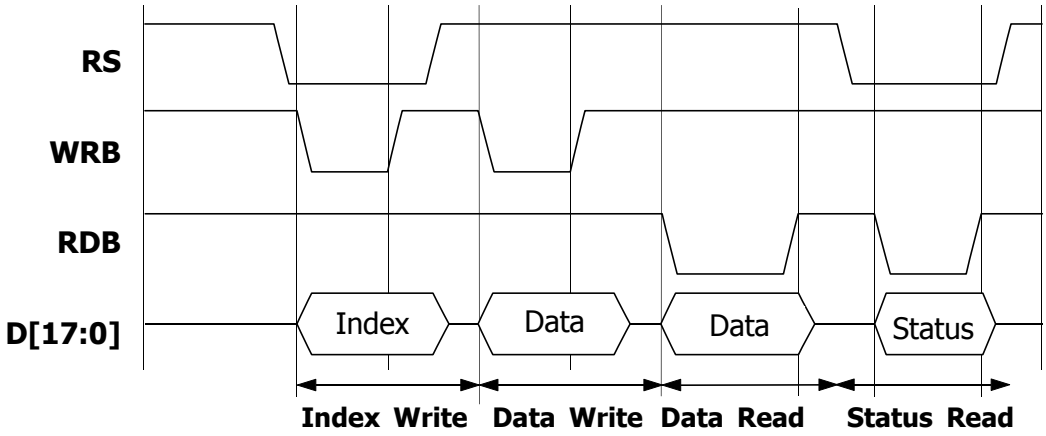

5-3-2. Timing Diagram of Driver IC

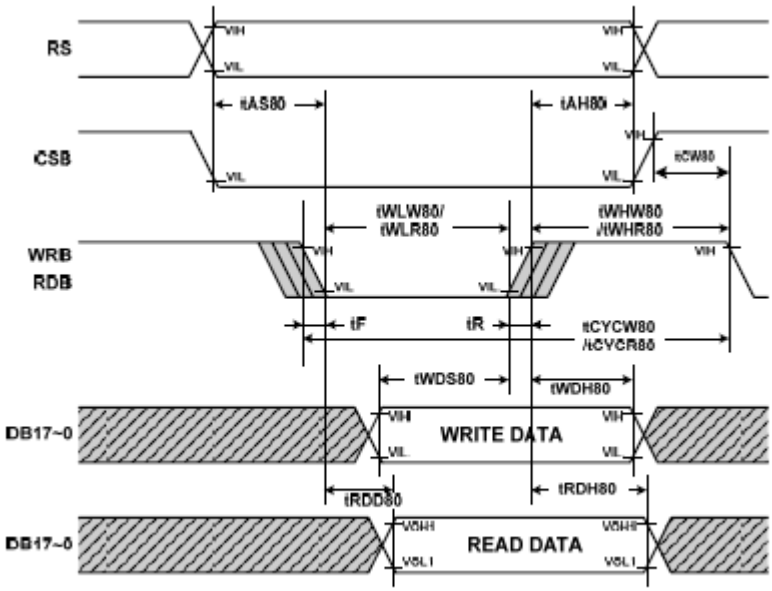

Note : tWLW80 and tWLR80 are determined by the overlap period of low CSB and low WRB or low CSB and low RDB

5-3-3. AC Characteristics

Characteristic		Symbol	Specification		Unit
			Min.	Max.	
Cycle time	Write	tCYCW80	85	-	ns
	Read	tCYCR80	500	-	
Pulse rise / fall time		tR, tF	-	15	
Pulse width low	Write	tWLW80	27.5	-	
	Read	tWLR80	250	-	
Pulse width high	Write	tWHW80	27.5	-	
	Read	tWHR80	250	-	
RS, CSB to WRB(RDB) setup time		tAS80	10	-	
RS, CSB to WRB(RDB) hold time		tAH80	2	-	
CSB to WRB(RDB) time		tcw80	15	-	
Write data setup time		tWDS80	40	-	
Write data hold time		tWDH80	15	-	
Read data delay time		tRDD80	-	200	
Read data hold time		tRDH80	5	-	

5-3-4. RESET Timing

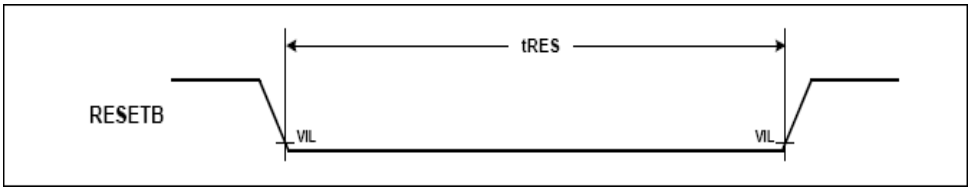

Parameter	Description	Min	Max	Unit
tRES	Reset low pulse width	10	-	us

5.4. Recommended Operating Sequence

5.4.1 Power On/Off Sequence

POWER ON SEQUENCE

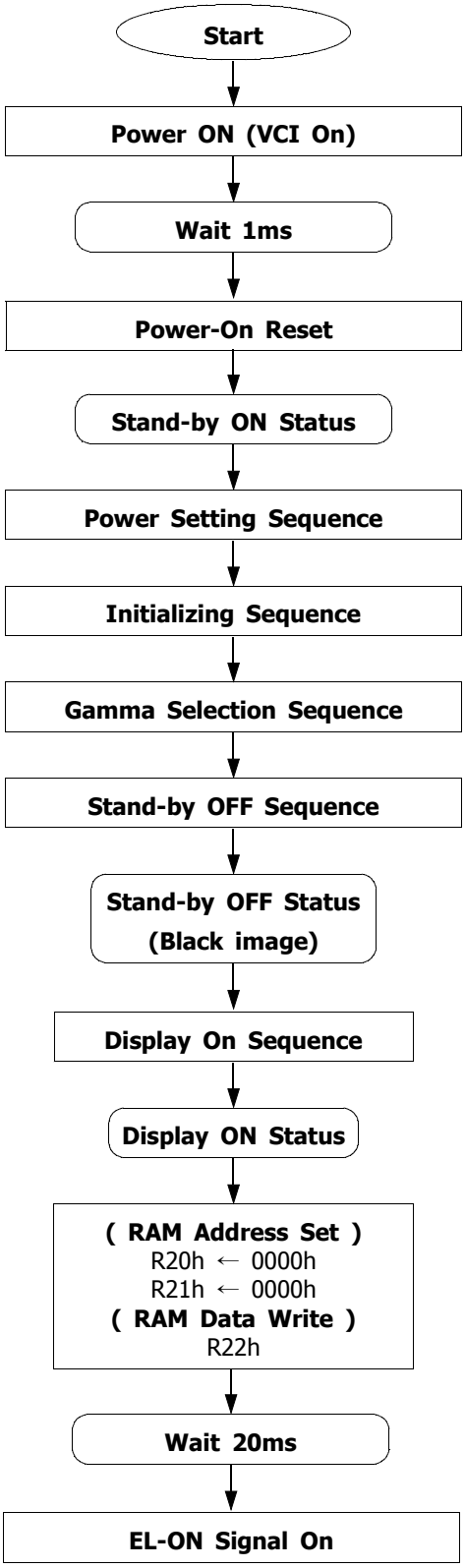

POWER OFF SEQUENCE

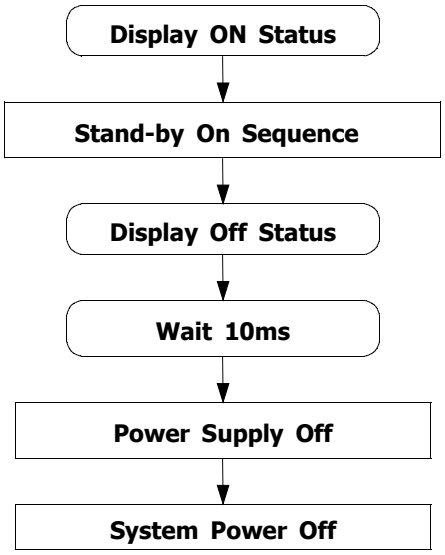

5.4.2 Power Setting Sequence

Register	Setting Value	Description
R12h	0008h	VCI1 = 2.50V
R13h	146Ah	VINT = -2V, VGH = 5.2V, VGL = -7.0V
R14h	4202h	VLOUT1=5.3V, VLOUT2=8.1V, VLOUT3=-10.6V

5.4.3 Initializing Sequence

Register	Data Value	Description
R01h	8828h	Display Duty Control (BP=8, FP=8, 240x320 mode)
R23h		
R03h	8030h	Interface Select (CPU 18bit, 262K colors)
R18h	001Fh	Operation frequency (60Hz)
R1Ah	0005h	Source Driver Control
R06h	0000h	When TE signal is not used
R43h		Luminance setting(160cd), Refer to below Note (1)
R80h		Gamma Correction Register Refer to below Note (1) to luminance control.
R70h		
R71h		
R72h		
R73h		
R74h		
R75h		
R76h		
R77h		
R78h		

* Note (1) Gamma Control Registers vs Brightness Level

Brightness (cd/m2)	Recommended Register Setting Value										
	R43h	R80h	R70h	R71h	R72h	R73h	R74h	R75h	R76h	R77h	R78h
190	0003h	0004h	2A05h	2885h	3405h	2018h	1B1Bh	221Dh	1D20h	2221h	1E1Eh
160	0004h	0005h	2705h	2685h	3185h	1F16h	1B1Ah	221Ah	1C1Fh	2121h	1D1Eh
130	0005h	0006h	2485h	2485h	2E85h	1F16h	191Bh	221Ah	1C1Fh	1F1Fh	1D1Eh

5.4.4 Display ON/OFF Sequence

DISPLAY ON SEQUENCE

Display Off Status
↓
Source Data Release
↓
Wait 20ms
↓
R05h ← 0001h
↓
Display On Status

DISPLAY OFF SEQUENCE

Display On status
↓
R05h ← 0000h
↓
Display Off status

5.4.5 Stand-by / Wake-up Sequence

STAND-BY SEQUENCE

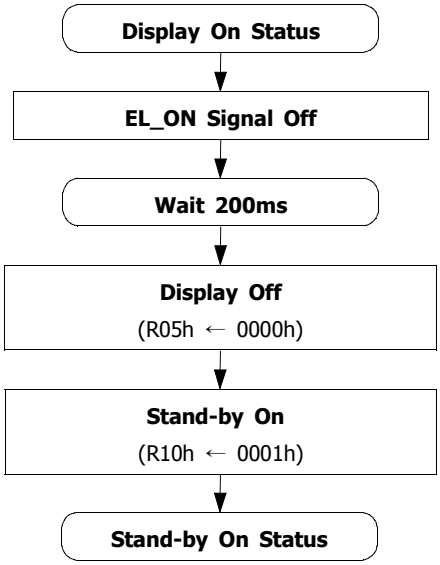

WAKE-UP SEQUENCE

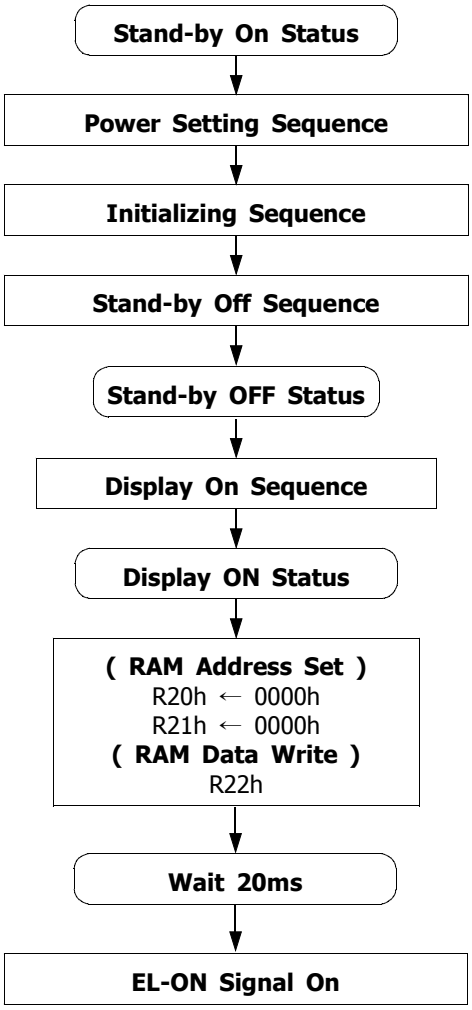

* Note (1) In Stand-by Off Sequence, it is possible to use Power On Sequence.
Note (2) In Stand-by On Sequence, GRAM data and Instruction register value are maintained.

5.4.6 GRAM Data Write/Read Sequence

Memory Data Write Sequence

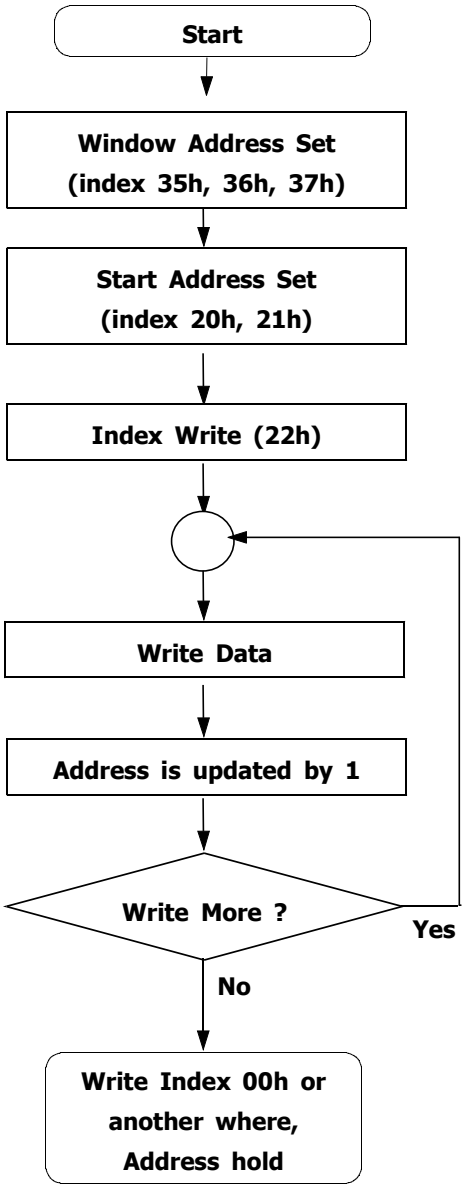

Memory Data Read Sequence

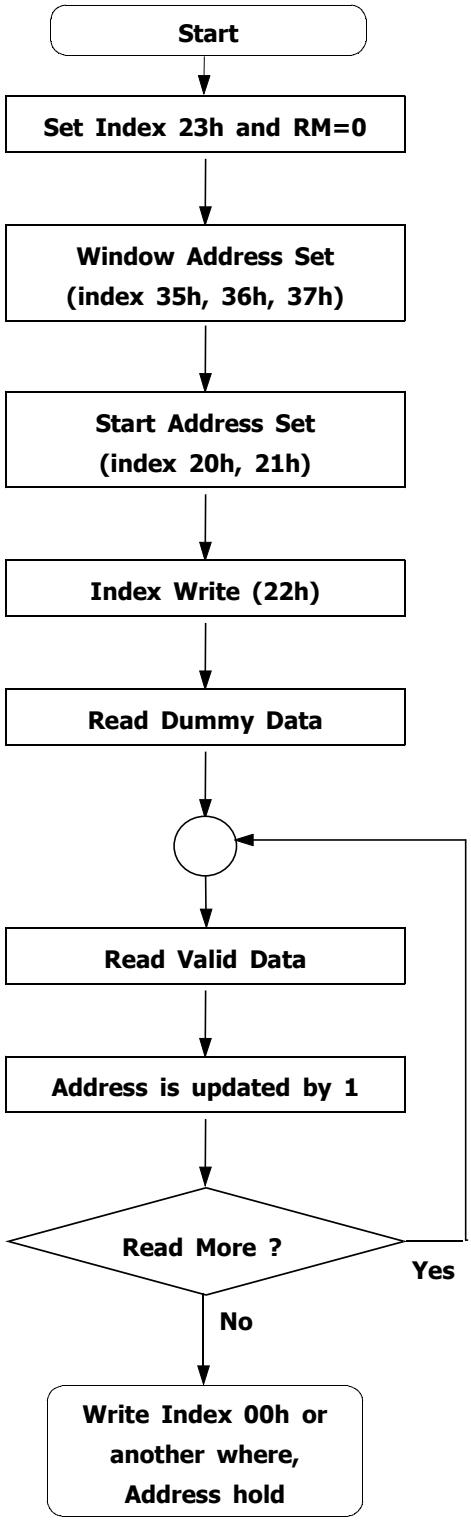

6. Quality Level & Inspection Criteria

The environmental conditions for inspection shall be set as follows.

* Temperature & Humidity
  Room temperature : +22 +/- 3°C
  Humidity : 65 +/- 20%RH
* Inspection Distance : 30cm (approx.)
* Viewing angle : within 30°
* Ambient Light: 1000±200 lux

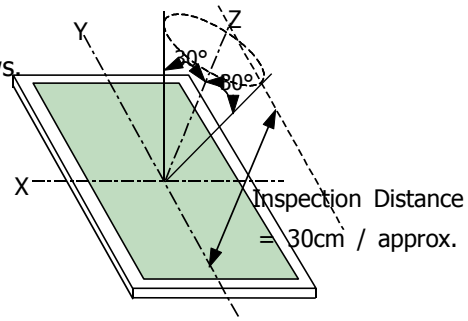

6.1. AQL (Acceptance Quality Level)

* Inspection type: Normal inspection, Single Sampling
* Sampling size: Code letter (must be J or bigger) on Level II of general inspection in the ISO2859 Table-I.
* Major Defect: AQL = 0.4%
  Major defects are considered to present substantial degradation to the usability for the product application.
* Minor Defect: AQL = 1.0%
  Minor defects are not considered to present substantial degradation for the product application or to be defect that deviate from the existing standards and are almost unrelated to the effective usage of the product or its operation.

6.2. Inspection Criteria

<table>
<tr><th>No.</th><th>Item</th><th>Criterion for Defects</th><th>Defect Type</th></tr>
<tr><td>1</td><td>Non Display</td><td>disallowance</td><td>Major</td></tr>
<tr><td>2</td><td>Irregular Operating</td><td>disallowance</td><td>Major</td></tr>
<tr><td>3</td><td>Line Defect</td><td>disallowance (Vertical line/ Horizontal line / Periodical line)</td><td>Major</td></tr>
<tr><td>4</td><td>Dark Spot
/Bright Spot</td><td>
<table>
<tr><th colspan="3">Acceptable number (mm)</th></tr>
<tr><td></td><td>Dark</td><td>Bright</td></tr>
<tr><td>D≤0.16</td><td>2</td><td>0</td></tr>
</table>
</td><td>Minor</td></tr>
<tr><td>5</td><td>Polarizer
Dent/Scratch
 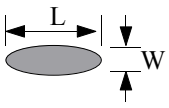

Ø=(L+W)/2</td><td>■ Spot Shape
<table>
<tr><th>Size Ø (mm)</th><th>Acceptable Number</th></tr>
<tr><td>Ø ≤ 0.15</td><td>2</td></tr>
<tr><td>Ø > 0.15</td><td>0</td></tr>
</table>
■ Line Shape
<table>
<tr><th>Width (㎜)</th><th>Length (㎜)</th><th>Acceptable Number</th></tr>
<tr><td>W≤0.03</td><td>Ignore</td><td>Ignore</td></tr>
<tr><td rowspan="2">0.03 < W≤0.05</td><td>L≤2.0</td><td>Ignore</td></tr>
<tr><td>L>2.0</td><td>2</td></tr>
<tr><td rowspan="2">0.05 < W≤0.08</td><td>L≤1.0</td><td>Ignore</td></tr>
<tr><td>L>1.0</td><td>1</td></tr>
</table>
</td><td>Minor</td></tr>
</table>

No	Item	Criterion for Defects	Defect Type
6	Bubble in Polarizer (Spot shape) 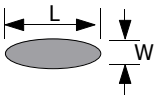 Ø=(L+W)/2	Size Ø (mm) / Acceptable Number 0.2 < Ø ≤ 0.3 : 2 0.3 < Ø ≤ 0.5 : 1 0.5 < Ø : 0	Minor
7	Line Sharp 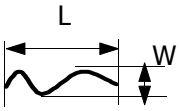 	Width (㎜) / Length (㎜) / Acceptable Number W≤ 0.02 / Ignore / Ignore 0.02 < W≤0.05 / 0.1 < L≤2.0 / 1	Minor
8	Stain	disallowance * Note: Customer will be responsible for determination of the perimeters for a limit sample. * Note : Stains wiped out or blew off easily are acceptable	Minor
9	Discolor	disallowance * Note: Customer will be responsible for determination of the perimeters for a limit sample.	Minor
10	Glass side Crack (general/pad)	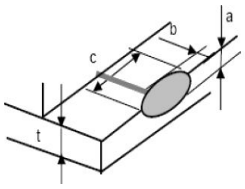 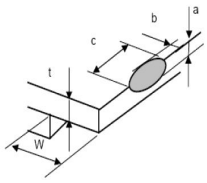 Item / acceptable a / a < t b / b < 0.3mm c / c < 3.0mm	Minor
11	Surface Stain	A stain on the display surface that cannot be cleaned by using soft cloth and wiping gently is not permitted.	Minor
12	SMT(Soldering) of FPC	(1) No polarity opposition (2) No wrong insertion	Major
13	Solder Short of FPC	A short of the proximity PATTERN and LAND is defect.	Major
14	Bezel Oxidation	No oxidation allowed on the bezel surface.	Minor
15	Solder Ball	(1) 0.45 <ø , N ≥ 1 (2) 0.30 <ø≤0.45 , N ≥ 1 ø: Average diameter of solder ball (unit : mm) (3) 0.50 <L , N ≥ 1 L: Average Length of solder chip (unit : mm)	Minor

7. Reliability Test Conditions

-. Items of reliability: All test result of items should be judged in 2 hours recovery time at room temperature

No	Item	Condition	Sample Size	Criteria
1	Dry Heat Temperature (Storage)	96hrs @+85℃	6 pcs	* No cosmetic defects are permitted. * Brightness difference must be less than 15% comparing initial value. * Current consumption should not be more than 2 times of its initial current. * White color's chromaticity should not be exceed USL and LSL.
2	Cold Temperature (Storage)	96hrs @-40℃	6 pcs	
3	Dry Heat Temperature (Operating)	96hrs @+60℃	6 pcs	
4	Cold Temperature (Operating)	96hrs @-20℃	6 pcs	
5	Thermal shock Test (Storage)	50 Cycles (50 hrs, 1 cycle=hrs) @-40~+80℃	6 pcs	
6	Heat Humidity Test (Operating)	96hrs @+40°C, 95% (+2%,-3%RH)	12 pcs	
7	Heat Humidity Cycle (Operating)	5℃(0%)→60℃(20%)→-5℃(0%)→60℃(90%)→25℃(0%), 6cycle (12Hr/1Cycle) IEC 60068-2-30	12 pcs	
8	ESD Test (Non Operating)	Discharge Resistance : 330Ω Capacitance : 150pF Discharge : Air ±10kV, Contact ±4kV 5times/4points/Corner	6 pcs	**(Refer to Note-1)** * No cosmetic and electrical defects are permitted. * Current consumption should not be more than 2 times of its initial current.
12	Vibration (Packaging)	Random Vibration. 0.015G2/Hz from 5~200Hz -6bB/Octave from 200~500Hz IEC 68-34	-	* No cosmetic and electrical defects are permitted.
13	Drop Test (Packing)	Height : 80cm 1corner/3edges/6surfaces	-	* No cosmetic and electrical defects are permitted.

* **Note-1)** A sample malfunction caused by ESD damage but operating as normal goods will not be considered a defective product.

8. Handling Precautions

8.1. Mounting Method

The display panel consists of a thin glass substrate with polarizers and encapsulation glass, which may easily get damaged. Therefore the display module should be protected from external damage; for example drop, high pressure onto glass etc..

8.2. Cleaning

When a user needs to clean the display surface, then must use a soft cloth must be used or it should be wiped with the following solvents.

* Recommended Volatile Solvent:
  1)Isopropyl alcohol, 2)Ethyl alcohol, 3)Trichlorotriflorothane

It is prohibited to wipe the display surface with dry or hard materials that will damage the polarizer surface. Do not use the following solvents:

* Prohibited Solvent:
  1)Water, 2)Ketone, 3)Aroma tics

Do not wipe the signal pad area with dry or hard materials since it may cause damage to the signal patterns. Do not use the following solvents on the pad to prevent it from being contaminated:

* Prohibited Materials on signal Pattern:
  1)HCFC, 2)Soldering Flux, 3)Chlorine(Cl) or Sulfur(S), 4)Spit or Fingerprint

8.3. Static Discharge

The display module uses C-MOS LSI drivers and a LTPS glass substrate, therefore SDI strongly recommends that users should protect the display module from ESD damages.

* Connect all input signals to set. If there are unused input terminals, then those should be connected to VCI or VSS.
* Do not input any signals before the power is turned on.
* Ground workers' body, soldering iron, specific assembly jig and machines should be connected to a ground level so that the display module will not be damaged by electrostatic discharge.
* The ionizer should be settled to prevent electrostatic discharge when a user removes the protection film on the polarizer.

8.4. Safekeeping

SDI recommends that a user should keep the display modules as packed. If a user needs to unpack the modules, then the user should avoid high pressure, strong impacts or falling from shelves.

Do not leave the modules under sunshine, or expose them to high temperature or humidity to avoid quality degradation.

8.5. Operating Precaution

-. A user must run the modules within the recommended operating voltage. Higher voltage may cause electronic damage or shorten the lifetime of the display.

-. Luminance differences between lit and unlit pixels may be occurred after long-term operation with a fixed pattern or image. Therefore, SDI strongly recommends that a user should not operate the display continuously with a stationary image or fixed-pattern. A user should scroll the image, so that a fixed pattern will not be displayed on the display panel for long time.

-. Strong pressing onto the display area may cause defects. Therefore the gap between polarizer's surface and the window should be more than zero millimeter.

-. A slight dew depositing on the terminals can cause electro-chemical reactions resulting in a

terminal open circuit. Usage under the maximum operating temperature and with 50% relative humidity or less is required.

-. Production Environment: The modules be handled in a dust-free environment.

-. Electrostatic Discharge Damages: Be careful of the occurrence of electrostatic discharge.

-. Production Environmental: Be careful when assembling the modules into a customer's phone set to prevent external forces to the modules such as twisting or excessive mechanical stress.

8.6. Storage

In the case of storing the modules for a month or more (for instance, as spare parts), the following methods are recommended.

-. Keep the modules inside a sealed polyethylene envelop so that outside air or humidity will not infiltrate the modules.

-. Keep the modules in a shady place to avoid infrared's exposure, and maintain the storage area's temperature and humidity stable.

-. Avoid touching any material onto the display surface's polarizer. SDI recommends that a user should store the modules as they are contained inside the inner carton.

8.7. Safety

-. The display panel is composed of glass may cause a skin-deep wound if a user disassembles or repairs it. Do not try to disassemble or repair the display module at discretion.

-. Be careful of glass chips that may cause injury to the skin of the finger when the display part is broken.

-. In the event that parts of the module is come in contact with skin, wipe the affected skin with a paper towel or gauge and wash it off well with soap and receive medical attention if necessary.

-. A user's fingers may get an electrical shock when touching the module's components due to the electrostatic discharge. Please do not touch the operated display module with bare hands.

-. Do not use the display module except for a specified purpose.

8.8 Employing Limit Sample

8.8.1 Usually limit samples can be used in SDI's production line so that an inspector may judge a products whether PASS or FAIL comparing the products to limit sample.

8.8.2. If the following cases shall occur then appropriate action should be taken after agreement of both parties.

-. When a question arises about this specifications.

-. When a new problem arises that is not specified in this specifications.

-. When an inspection specification changes or operating conditions change for the customer.

-. When a new problem arises at the customer's operating set

9. Drawings

9.1. Product Drawing

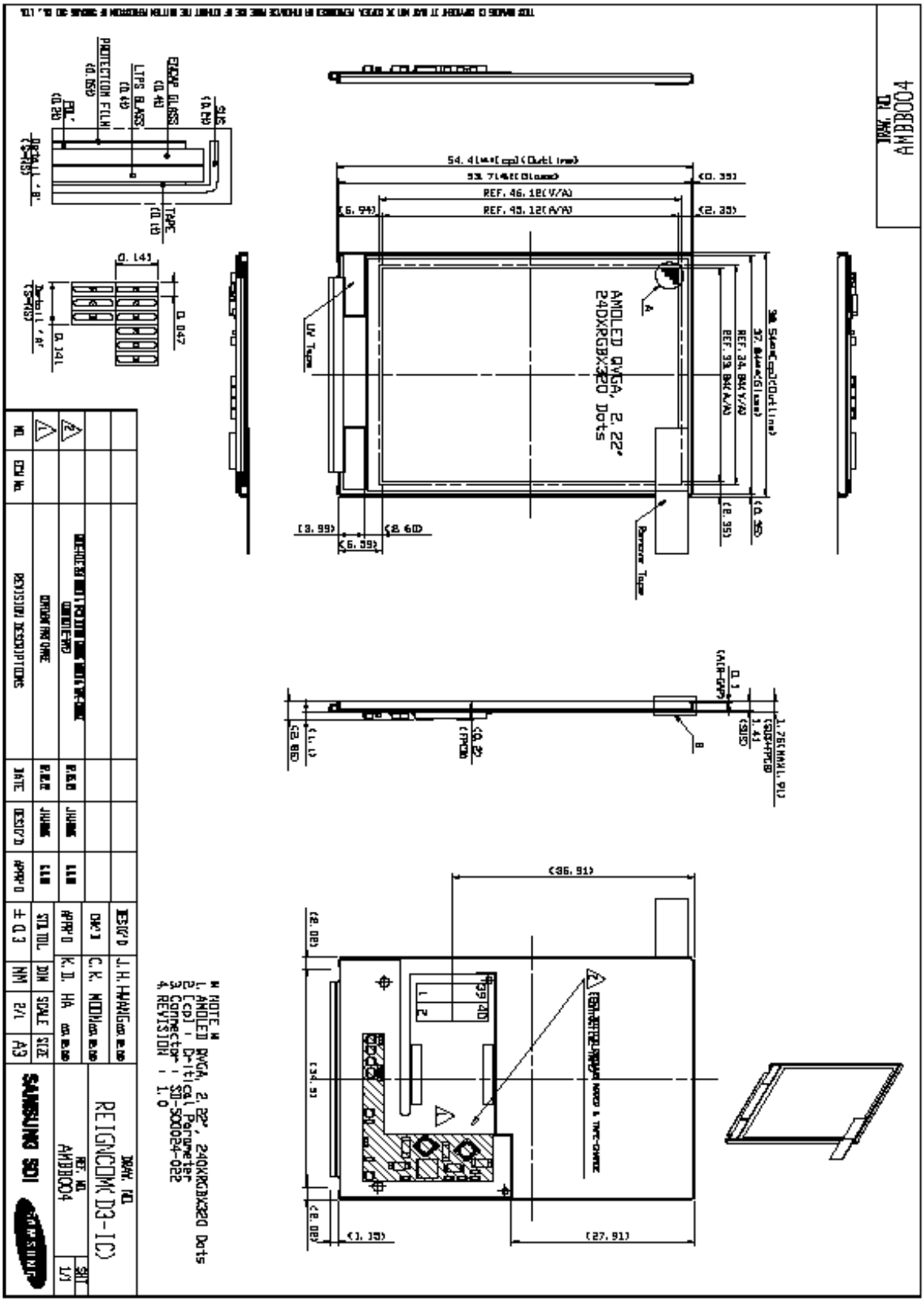

9.2. Circuit Drawing

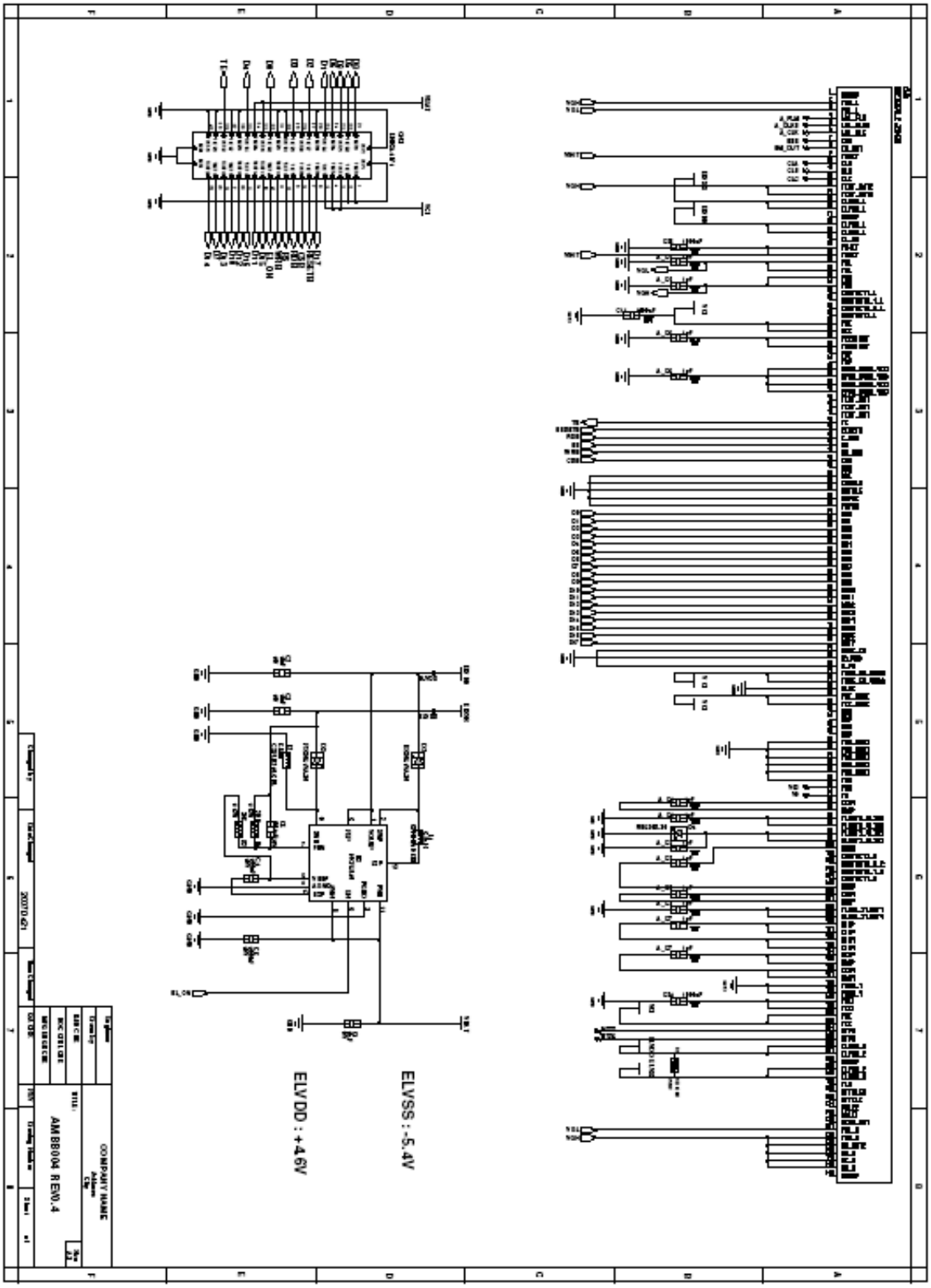

9.3. Part Placement

PLACEMENT SPEC	DESIGNED	APROVED
	J.S.KIM 2007.04.30	Y.S.KIM 2007.04.30

1. PLACEMENT (FRONT)

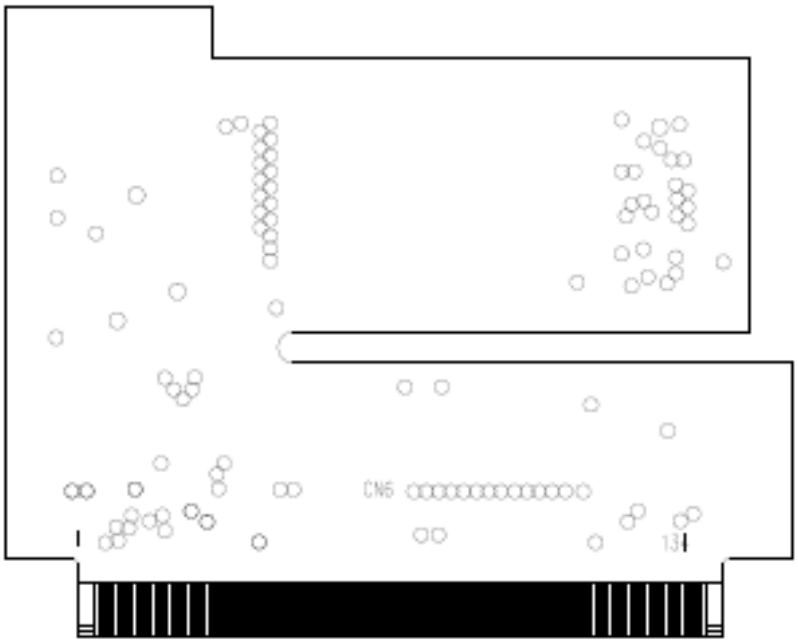

MODEL		REV	0.4
LAYER	SILKSCREEN_1		
DATE	2007/04/30	DESIG'D	J.S.KIM
SAMSUNG SDI(All Rights Reserved)			

SAMSUNG SDI CO., LTD. (All Rights Reserved)

DOC. NO: LJ96-03660B	REIGNCOM	REV0.4	PAGE 1/3

9.3. Part Placement

PLACEMENT SPEC	DESIGNED	APROVED
	S.H.LEE 2007.04.30	Y.S.KIM 2007.04.30

1. PLACEMENT (REAR)

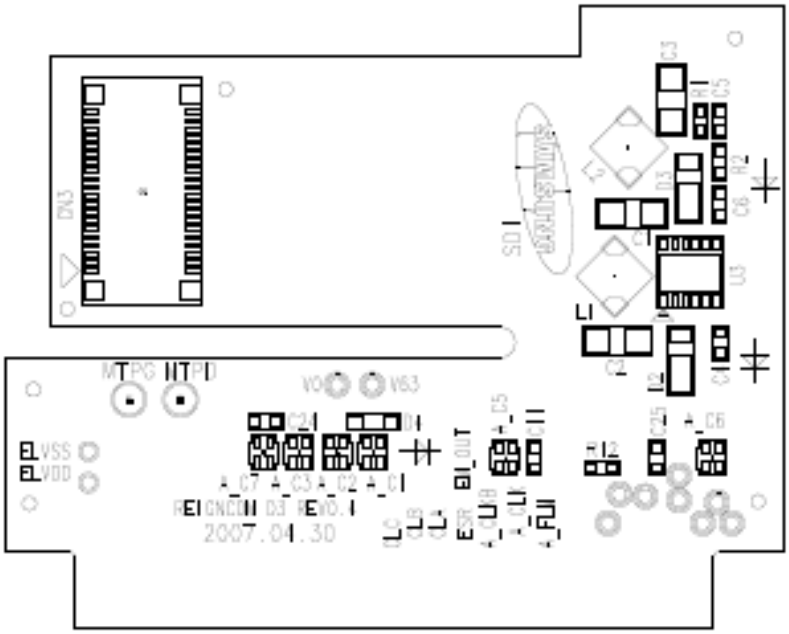

SAMSUNG SDI CO., LTD. (All Rights Reserved)

DOC. NO: LJ96-03660B	REIGNCOM	REV0.4	PAGE 2/3

9.4. Packing Drawing

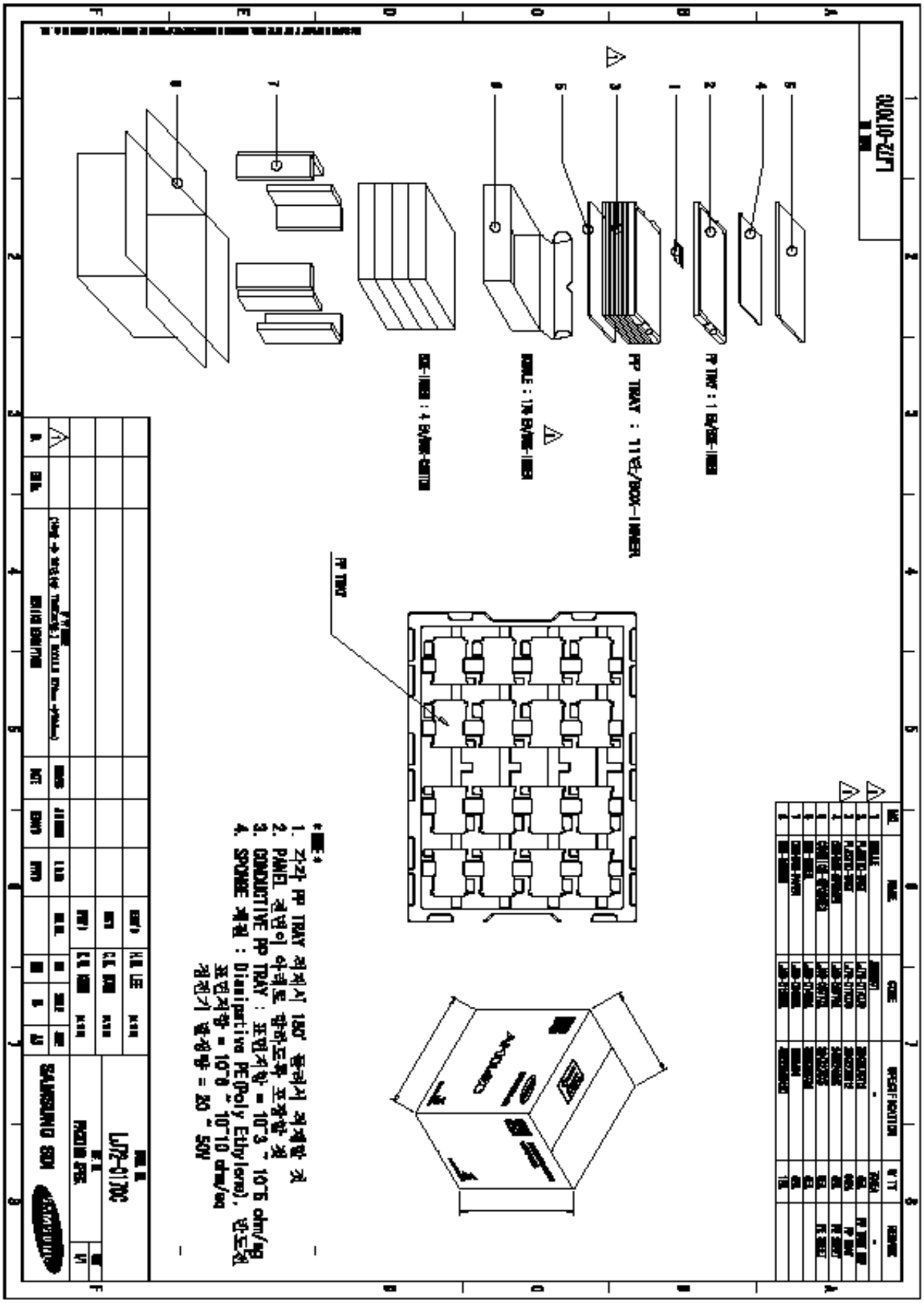

10. Analysis Report for Hazardous Substance

SGS

Test Report No. F690601/LF-CT8AYA07-08855 Date: April 12, 2007 Page 1 of 3

To: SAMSUNG SDI
508
Sungsung-dong
Cheonan-city
CHUNGNAM
Korea

The following merchandise was submitted and identified by the client as :

Product Name	: REIGNCOM Module
SGS File No.	: AYA07-08855
Received Date	: April 05, 2007
Test Performing Date	: April 09, 2007
Test Performed	: SGS Testing Korea tested the sample(s) selected by applicant with following results
Test Results	: For further details, please refer to following page(s)
Comments	: The sampling and testing was performed only for the part indicated in the photo without disassembly by the applicant's specific request.

SGS Testing Korea Co. Ltd.

Pluto Kim
Monet Jeong
Judy Oh
Jerry Jung
/Testing Person

Jeff Jang / Chemical Lab Mgr

This document is issued by the Company under its General Conditions of Service accessible at http://www.sgs.com/terms_and_conditions. Note. Attention is drawn to the limitation of liability, indemnification and jurisdiction issues defined therein. Any other holder of this document is advised that information contained herein reflects the Company's findings at the time of its intervention only and within the limits of Client's instructions, if any. The Company's sole responsibility is to its Client and this document does not exonerate parties to a transaction from exercising all their rights and obligations under the transaction documents. Any unauthorized alteration, forgery or falsification of the content or appearance of this document is unlawful and offenders may be prosecuted to the fullest extent of the law.

SGS

Test Report No. F690601/LF-CT&AYA07-08855 Date: April 12, 2007 Page 2 of 3

Sample No. : AYA07-08855.001

Sample Description : REIGNCOM Module

Item No./Part No. : N/A

Heavy Metals

Test Items	Unit	Test Method	MDL	Results
Cadmium (Cd)	mg/kg	US EPA 3050B(1996), US EPA 6010B(1996), ICP	0.5	N.D.
Lead (Pb)	mg/kg	US EPA 3050B(1996), US EPA 6010B(1996), ICP	5	N.D.
Mercury (Hg)	mg/kg	US EPA 3052(1996), US EPA 6010B(1996), ICP	2	N.D.
Hexavalent Chromium (Cr VI)	mg/kg	US EPA 3060A(1996), US EPA 7196A(1992), UV	1	N.D.

Flame Retardants-PBBs/PBDEs

Test Items	Unit	Test Method	MDL	Results
Monobromobiphenyl	mg/kg	US EPA 3540C, GC/MS	5	N.D.
Dibromobiphenyl	mg/kg	US EPA 3540C, GC/MS	5	N.D.
Tribromobiphenyl	mg/kg	US EPA 3540C, GC/MS	5	N.D.
Tetrabromobiphenyl	mg/kg	US EPA 3540C, GC/MS	5	N.D.
Pentabromobiphenyl	mg/kg	US EPA 3540C, GC/MS	5	N.D.
Hexabromobiphenyl	mg/kg	US EPA 3540C, GC/MS	5	N.D.
Heptabromobiphenyl	mg/kg	US EPA 3540C, GC/MS	5	N.D.
Octabromobiphenyl	mg/kg	US EPA 3540C, GC/MS	5	N.D.
Nonabromobiphenyl	mg/kg	US EPA 3540C, GC/MS	5	N.D.
Decabromobiphenyl	mg/kg	US EPA 3540C, GC/MS	5	N.D.
Monobromodiphenyl ether	mg/kg	US EPA 3540C, GC/MS	5	N.D.
Dibromodiphenyl ether	mg/kg	US EPA 3540C, GC/MS	5	N.D.
Tribromodiphenyl ether	mg/kg	US EPA 3540C, GC/MS	5	N.D.
Tetrabromodiphenyl ether	mg/kg	US EPA 3540C, GC/MS	5	N.D.
Pentabromodiphenyl ether	mg/kg	US EPA 3540C, GC/MS	5	N.D.
Hexabromodiphenyl ether	mg/kg	US EPA 3540C, GC/MS	5	N.D.
Heptabromodiphenyl ether	mg/kg	US EPA 3540C, GC/MS	5	N.D.
Octabromodiphenyl ether	mg/kg	US EPA 3540C, GC/MS	5	N.D.
Nonabromodiphenyl ether	mg/kg	US EPA 3540C, GC/MS	5	N.D.
Decabromodiphenyl ether	mg/kg	US EPA 3540C, GC/MS	5	N.D.

NOTE: (1) N.D. = Not detected.(<MDL)
(2) ppm = mg/kg
(3) MDL = Method Detection Limit
(4) - = No regulation
(5) "" = Qualitative analysis (No Unit)
(6) Negative = Undetectable / Positive = Detectable

This document is issued by the Company under its General Conditions of Service accessible at http://www.sgs.com/terms_and_conditions.htm. Attention is drawn to the limitation of liability, indemnification and jurisdiction issues defined therein. Any other holder of this document is advised that information contained herein reflects the Company's findings at the time of its intervention only and within the limits of Client's instructions, if any. The Company's sole responsibility is to its Client and this document does not exonerate parties to a transaction from exercising all their rights and obligations under the transaction documents. Any unauthorized alteration, forgery or falsification of the content or appearance of this document is unlawful and offenders may be prosecuted to the fullest extent of the law.

SGS

Test Report No. F690601/LF-CT8AYA07-08855 Date: April 12, 2007 Page 3 of 3

Picture of Sample as Received:

Sample Color : Black, yellow

*** End ***

NOTE: (1) N.D. = Not detected.(<MDL)
(2) ppm = mg/kg
(3) MDL = Method Detection Limit
(4) - = No regulation
(5) ** = Qualitative analysis (No Unit)
(6) Negative = Undetectable / Positive = Detectable

This document is issued by the Company under its General Conditions of Service accessible at http://www.sgs.com/terms_and_conditions.htm. Attention is drawn to the limitation of liability, indemnification and jurisdiction issues defined therein. Any other holder of this document is advised that information contained hereon reflects the Company's findings at the time of its intervention only and within the limits of Client's instructions, if any. The Company's sole responsibility is to its Client and this document does not exonerate parties to a transaction from exercising all their rights and obligations under the transaction documents. Any unauthorized alteration, forgery or falsification of the content or appearance of this document is unlawful and offenders may be prosecuted to the fullest extent of the law.