Product Specification

WWW.LCDSOLAR.COM

Solar Technologies, Inc. – Headquarters
26180 Enterprise Way
Building No. 100
Lake Forest, CA 92630

949.458.1080 Tel.
949.458.1081 Fax
Sales@LCDSolar.com

The Solar Technologies name and logo are the registered service marks of Solar Technologies, Inc. All other trademarks, service marks, logos, slogans, domain names, trade names and copyrights (collectively "Marks") are the properties of their respective owners. Solar Technologies disclaims any proprietary interest in Marks other than its own. All product specifications are provided for convenience only. The product specifications contained herein are provided "as is" and with respect to the information contained therein Solar Technologies disclaims all representations and warranties of any kind, including warranties of merchantability, fitness for a particular purpose, and accuracy of the content. Please consult the manufacturer for specific product information.

Approval

TO :
DATE : Nov. 04. 2010

SAMSUNG MOBILE DISPLAY TFT-LCD

MODEL NO. : LMS700KF21-0

_____

_____

_____

_____

Any Modification of Spec is not allowed without SMD's permission.

Approved by : J.O. KWAG

LCD Production Development Team

Samsung Mobile Display

Contents

* Revision History
General Description ---------- (4)
1. Absolute Maximum Ratings ---------- (6)
   1.1 Absolute Ratings Of Environment
   1.2 Electrical Absolute Ratings
2. Optical Characteristics ---------- (8)
3. Electrical Characteristics ---------- (12)
   3.1 TFT-LCD Module
   3.2 Back-light Unit
4. Touch Screen Panel Specification ---------- (14)
   4.1 Electrical Characteristics
   4.2 Mechanical & Reliability Characteristics
   4.3 Design Guide
5. Block Diagram ---------- (17)
   5.1 TFT-LCD Module with Back Light Unit
   5.2 Back Light Unit
   5.3 Touch Panel Unit
6. Input Terminal Pin Assignment ---------- (20)
   6.1 Input Signal & Power
   6.2 Input Signal, Basic Display Colors and Gray Scale of Each Colors
   6.3 Pixel Format
7. Interface Timing ---------- (23)
   7.1 Vertical / Horizontal Timing in Sync mode
   7.2 Interface Timing (Sync mode)
   7.3 AC Characteristic
8. Power ON/OFF Sequence ---------- (25)
9. Product label format ---------- (26)
10. General Precaution ---------- (27)
   10.1 Handling
   10.2 Storage
   10.3 Operation
   10.4 Others
11. Reliability test result ---------- (29)
   11.1 Test condition
   11.2 Judgement

Appendix.
- Packing method
- Outline dimension

Revision History

Approval

Data	Rev. No.	Page	Summary
May. 11. 2010	000		**Rev000 is first issued.**
May. 25. 2010	001	26	**Outline dimension is updated(error correction)**
==========	====	====	==========
Oct. 18. 2010	002	All	**Rev002 is issued**
			- Model No correction
			(LMS700KF21 → LMS700KF21-0)
		26	- Product label is added
		Appen.	- Packing method is changed(Vertical → horizontal)
		Appen.	- Modify alignmark on bottom chassis
Nov. 04. 2010	003	Appen.	**Rev003 is issued**
			- Packing method is changed

General Description

*** Description**

LMS700KF21-0 is a TMR(Transmissive with Micro Reflective) type color active matrix TFT (Thin Film Transistor) liquid crystal display (LCD) that uses amorphous silicon TFT as a switching devices. This model is composed of a TFT-LCD module, a driver circuit and a back-light unit. The resolution of a 7.0" contains 800 x (RGB) x 480 dots and can display up to 16.2M colors.

*** Features**

- Transmissive with Micro Reflective type and Back-light with LED.
- TN (Twisted Nematic) mode
- 24bit RGB Interface
- Back Light with 24 LEDs (Light Emitting Diode)

*** Applications**

- Display terminals for VoIP, PMP(Portable Multimedia Player), Portable CNS(P-CNS), AV, UMPC (Ultra Mobile PC) application products.

* **General information**

Items	Specification	Unit	Note
Display area	152.4(H) x 91.44(V)	mm	-
Driver element	a-Si TFT active matrix	-	-
Display colors	16.2M	colors	-
Number of pixels	800(H) x RGB x 480(V)	dot	-
Pixel arrangement	RGB stripe type	-	-
Pixel pitch	0.1905(H) x 0.1905(V)	mm	-
Display mode	Normally white	-	-
Viewing direction	6	o'clock	-

* **Mechanical information**

Item		Min.	Typ.	Max.	Unit	Note
Module size	Horizontal(H)	162.9	163.2	163.5	mm	-
	Vertical(V)	103.7	104.0	104.3	mm	(1)
	Depth(D)	4.3	4.5	4.7	mm	(1)
Weight		-	147	-	g	-

Note (1) Not include FPC
Refer to the Outline Dimension in the "9.Outline Dimension" for further information.

1. Absolute Maximum Ratings

1.1 Absolute Ratings of Environment

Item	Symbol	Min.	Max.	Unit	Note
Storage temperature	T_{STG}	-30	70	℃	(1)
Operating temperature (Panel Surface temperature)	T_{OPR}	-20	60	℃	(1),(2)

Note (1) 90 % RH Max. (40 °C ³ Ta)
Maximum wet-bulb temperature at 39 °C or less. (Ta > 40 °C) No condensation.

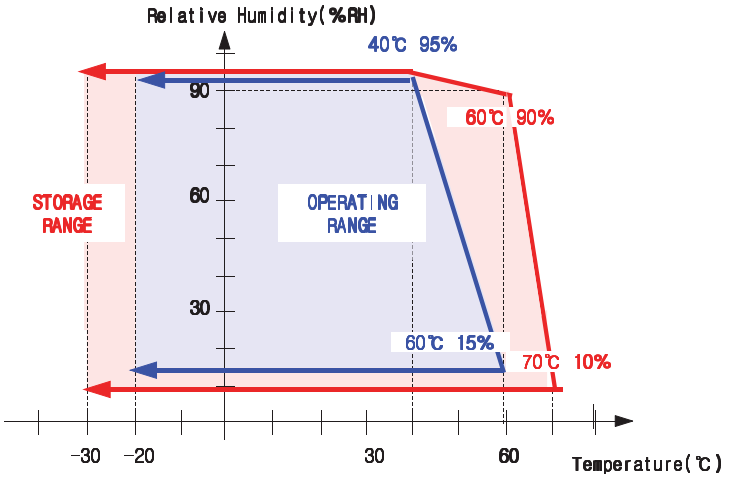

(2) In case of below 0°, the response time of liquid crystal (LC) becomes slower and the color of panel becomes darker than normal one.
Level of retardation depends on temperature, because of LC's characteristics.

(3) If any fixed pattern is displayed on LCD for minutes, image-sticking phenomenon may occur.

1.2 Electrical Absolute Ratings

(1) TFT-LCD Module

(Ta = 25°C, V_{SS}=GND=0V)

Characteristics	Symbol	Min.	Max.	Unit	Note
Power supply voltage	V_{CC}	-0.5	5.0	V	-

(2) Back-Light Unit

(Ta = 25 ± 2°C)

Item	Symbol	Min.	Max.	Unit.	Note
LED Current	I_L	-	30	mA	(1)

Note (1) Permanent damage to the device may occur if maximum values are exceeded or reverse voltage is loaded.
Functional operation should be restricted to the conditions described under normal operating conditions.

2. Optical Characteristics

The following items are measured under stable conditions. The optical characteristics should be measured in a dark room or equivalent state with the methods shown in Note (1).

Measuring equipment: SR-3, BM-7, EZ-Contrast

(Ta = 25 ± 2°C, V_{CC} = 3.3V, f_B = 60Hz, I_B = 20mA)

Item		Symbol	Condition	Min.	Typ.	Max.	Unit	Note
Contrast ratio (Center point)		C/R	NOTE (1) θ = 0 φ = 0 Normal Viewing Angle B/L On	300	700	-	-	(2) SR-3
Luminance of white (Center point)		YL		220	280	-	cd/㎡	(3) SR-3
Response time	Rising:Tr	Tr+Tf		-	16	50	msec	(5) BM-7
	Falling:Tf							
Color chromaticity (CIE 1931)	White	Wx		0.266	0.316	0.366	-	(6) SR-3
		Wy		0.285	0.335	0.385		
	Red	Rx		0.557	0.607	0.657		
		Ry		0.321	0.371	0.421		
	Green	Gx		0.295	0.345	0.395		
		Gy		0.521	0.571	0.621		
	Blue	Bx		0.099	0.149	0.199		
		By		0.064	0.114	0.164		
Viewing angle	Hor.	θL	C/R≥10 B/L On	55	70	-	Degrees	(7) Ez-Contrast
		θR		55	70	-		
	Ver.	φH		55	70	-		
		φL		55	70	-		
Brightness Uniformity (9 point)		Buni		70	80	-	-	(4) SR-3

Note (1) Test Equipment Setup

After stabilizing and leaving the panel alone at a given temperature for 30 min , the measurement should be executed. Measurement should be executed in a stable, windless, and dark room. 30 min after lighting the back-light. This should be measured in the center of screen.

Environment condition : Ta = 25 ± 2 °C

Back-Light On condition

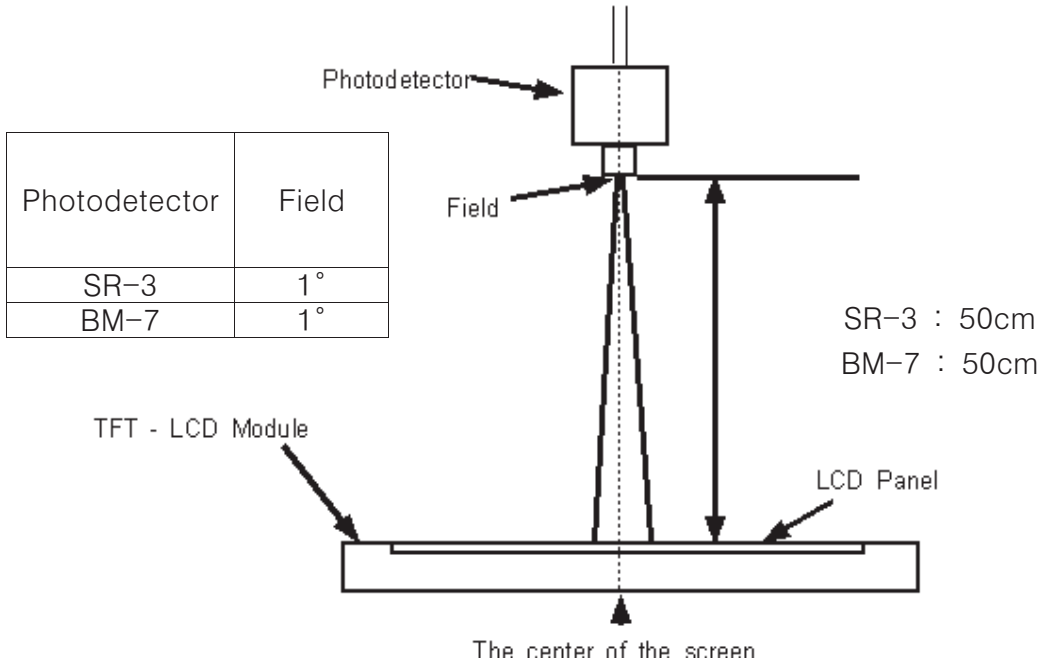

Photodetector	Field
SR-3	1°
BM-7	1°

Note (2) Definition of Contrast Ratio (C/R) : Ratio of gray max (Gmax) & gray min (Gmin) at the center point

$$CR = \frac{G\max}{G\min}$$

* Gmax : Luminance with all pixels white
* Gmin : Luminance with all pixels black

Note (3) Definition of Luminance of White : Luminance of white at the center point

Note (4) Definition of White Uniformity :

$$\text{White Uniformity} = \frac{\text{Min luminance of white among 9-points}}{\text{Max luminance of white among 9-points}} \times 100$$

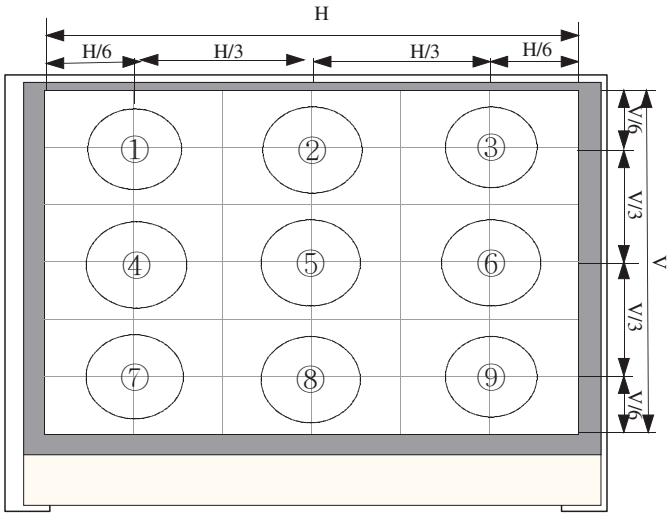

Note (5) Definition of Response time : Sum of Tr ,Tf

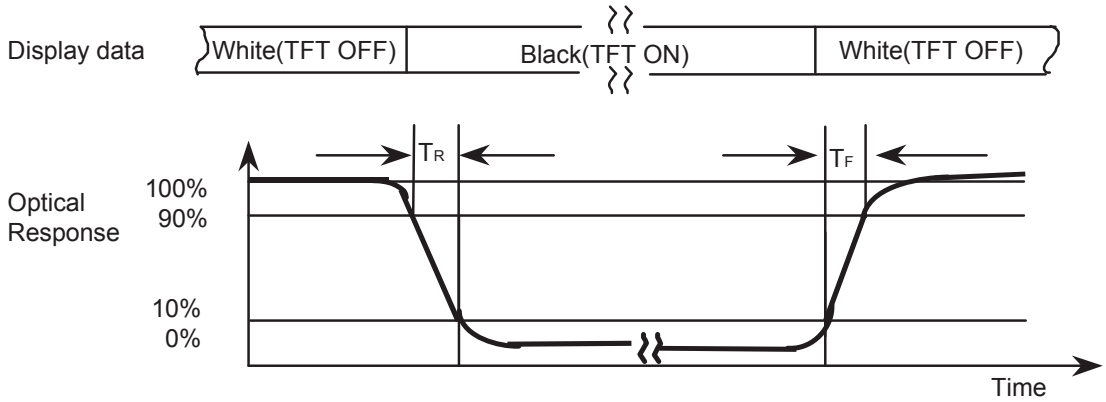

Note (6) Definition of Color Chromaticity (CIE 1931)

Color coordinate of white & red, green, blue at center point.

Note (7) Definition of Viewing Angle : Viewing angle range (CR≥10)

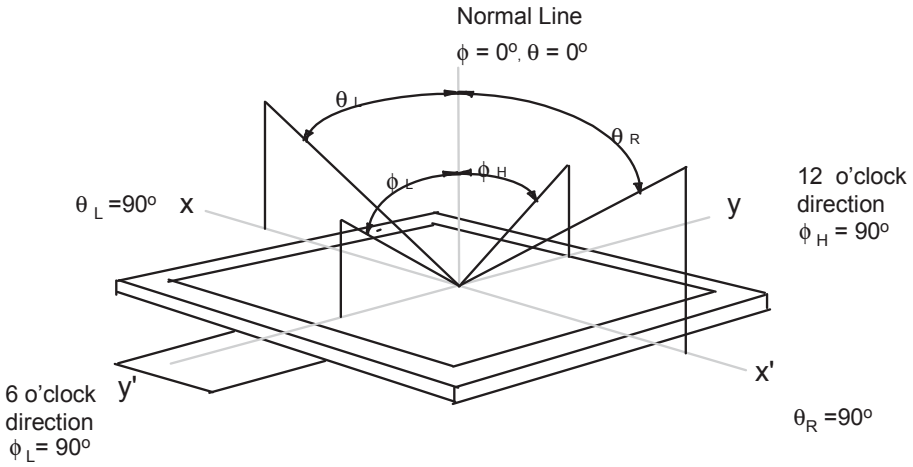

3. Electrical Characteristics

3.1 TFT-LCD Module

Ta = 25 ± 2°C

Characteristics		Symbol	Min.	Typ.	Max.	Unit	Note
Power supply voltage		V_{CC}	3.0	3.3	3.6	V	-
Power Dissipation	White	P_{FULL}	-	350	450	mW	(1),(2)
	Black		-	650	850		
	1 DOT		-	500	650		
Frame frequency		f_{Frame}	56	60	78	Hz	-
Dot Clock		DOTCLK	22.7	24.5	31.5	MHz	-

* To prevent a latch-up or DC operation of the LCD module, the power on/off sequence should be as the Chapter 7. Power Up/Down Sequence.

Note (1) V_{CC} = 3.3V, f_{Frame} = 60Hz, DOTCLK = 24.5MHz
(2) Dissipation current check pattern

▶ White pattern

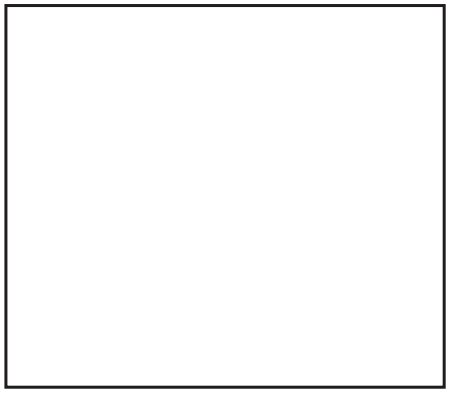

▶ Black pattern

▶ 1 Dot pattern

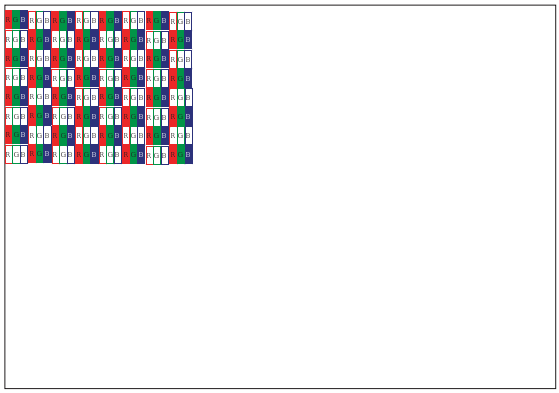

3.2 Back-Light unit

The Back Light system is an edge-lighting type with 24 white LED (Light Emitting Diode)s.

(Ta=25 ± 2°C)

Item	Symbol	Min.	Typ.	Max.	Unit	Note
LEDs Current	I_B	15	20	25	mA	(1)
Power Consumption	P_{BL}	1.2	1.6	2.0	W	-

Note (1) The LEDs parallel type (Refer to 5.2)

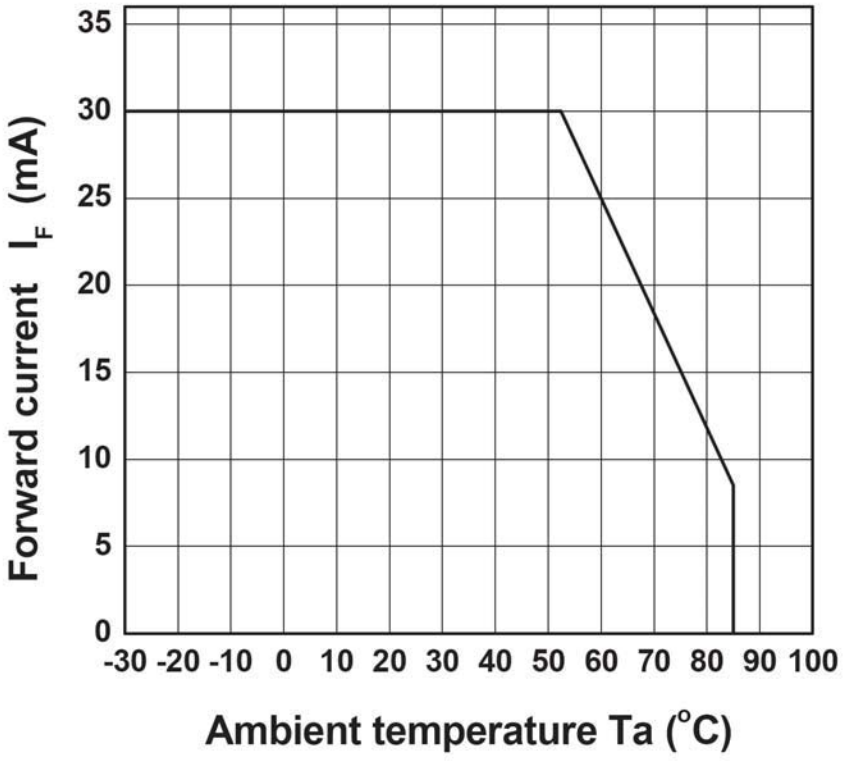

4. Touch Screen Panel Specifications

4-1. Electrical Characteristics

Item	Min.	Typ.	Max.	Unit	Note
Linearity	-1.5	-	1.5	%	Analog X and Y directions
Terminal resistance	100	660	1200	Ω	X
	100	250	1200	Ω	Y
Insulation resistance	20	-	-	MΩ	DC 25V
Voltage	3	5	7	V	DC
Chattering	-	-	10	ms	100kΩ pull-up
Transparency	78	80	-	%	JIS-K7105,ASTM D1003,@550nm

Caution: Do not operate it with a thing except a polyacetal pen(tip R0.8mm or more) or a finger, especially those with hard or sharp tips such as a ball point pen or a mechanical pencil.

4-2. Mechanical & Reliability Characteristics

Item	Min.	Typ.	Max.	Unit	Note
Activation force	5	-	80	g	(1)
Durability (surface scratching)	Write 100,000	-	-	characters	(2)
Durability (surface pitting)	1,000,000	-	-	touches	(3)
Surface hardness	3	-	-	H	JIS-K5400, ASTM D3363

Note (1) Stylus pen Input : R0.8mm polyacetal pen or Finger

(2) Measurement for Surface area

- Scratch 100,000 times straight line on the Film with a stylus change every 20,000times
- Force : 250gf
- Speed : 60mm/sec
- Stylus : R0.8 polyacetal tip

(3) Pit 1,000,000 times on the Film with a R8.0 silicon rubber.

- Force : 250gf
- Speed : 2times/sec

4-3. Design Guide

- Avoid the design that Front-case overlap and press on the active area of the touch-panel.
- Give enough gap (over 0.5mm at compressed) between the front case and touch-panel to protect wrong operating.

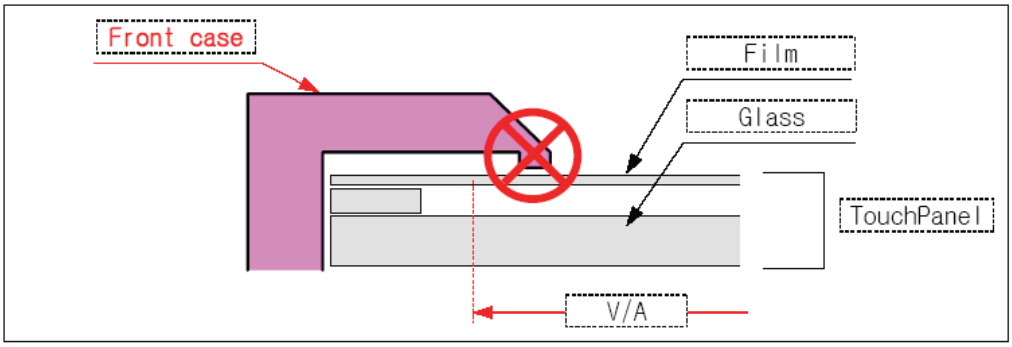

- Use a buffer material(Gasket) between the touch-panel and Front-case to protect damage and wrong operating.
- Avoid the design that buffer material overlap and press on the inside of touch-panel viewing area.

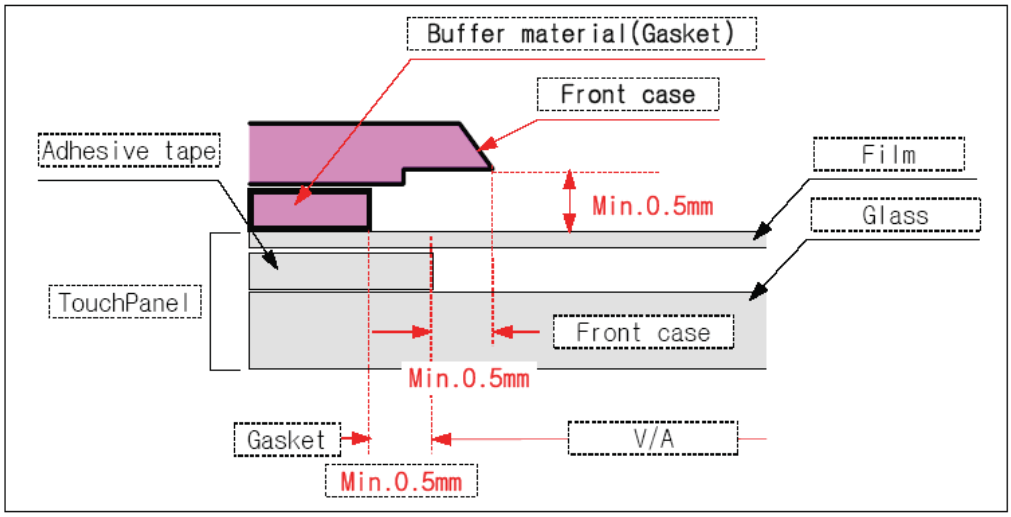

Approval

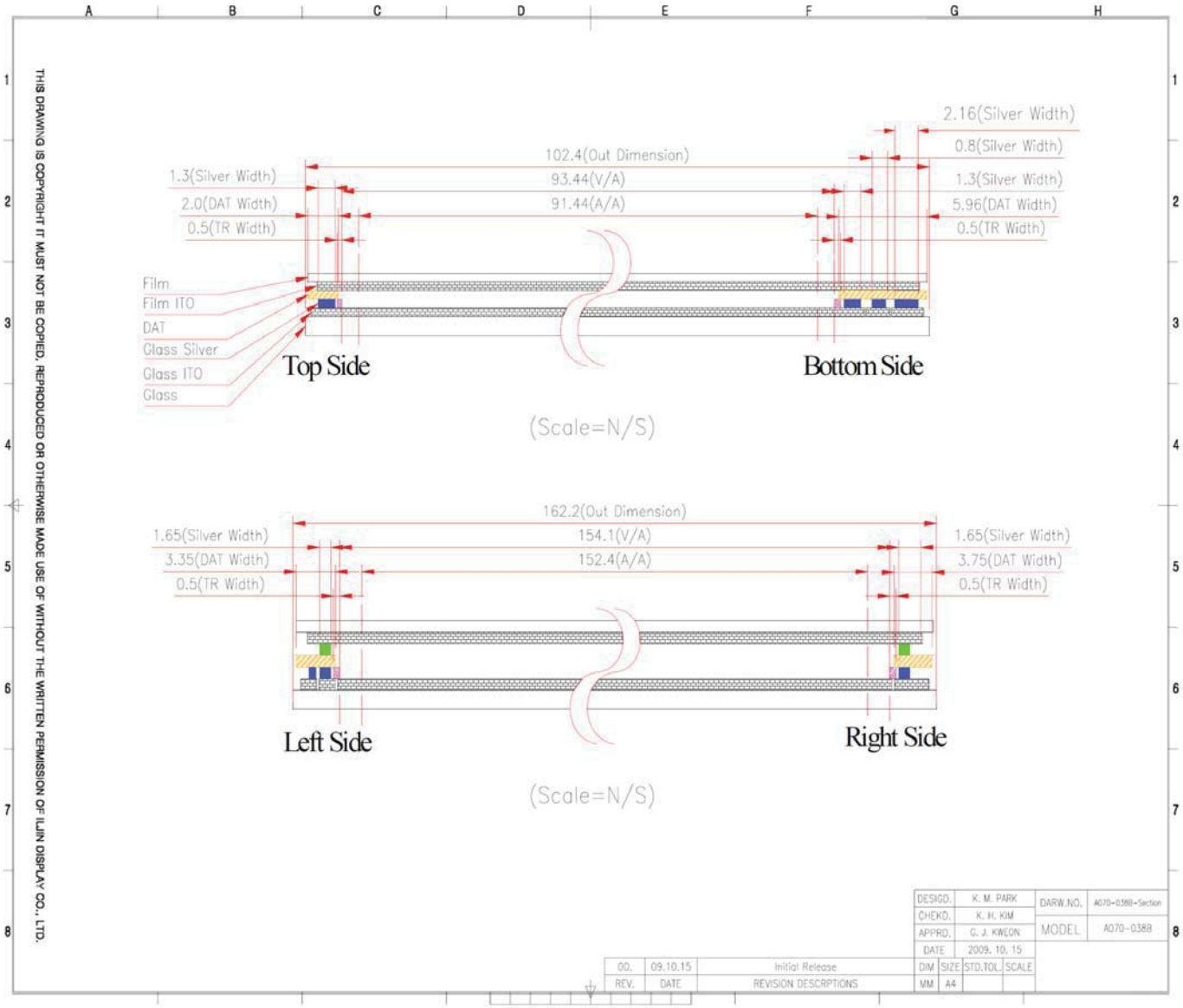

Doc . No	LMS700KF21-0	Rev.No	003	Page	16/30

5. Block Diagram

5.1 TFT-LCD Module (Interface System Structure) with Back Light Unit

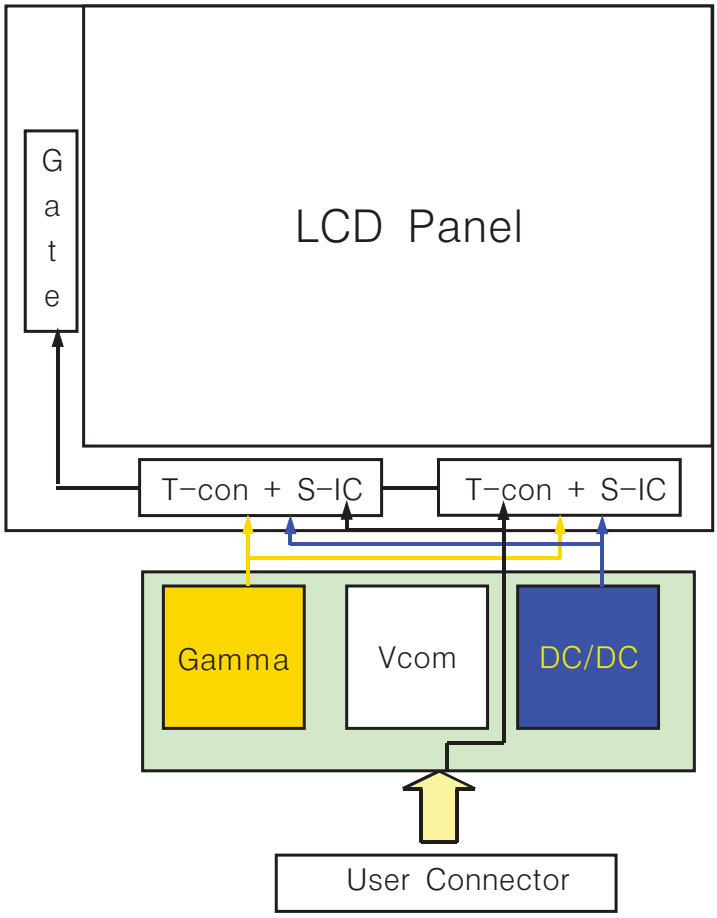

5.2 Back Light Unit

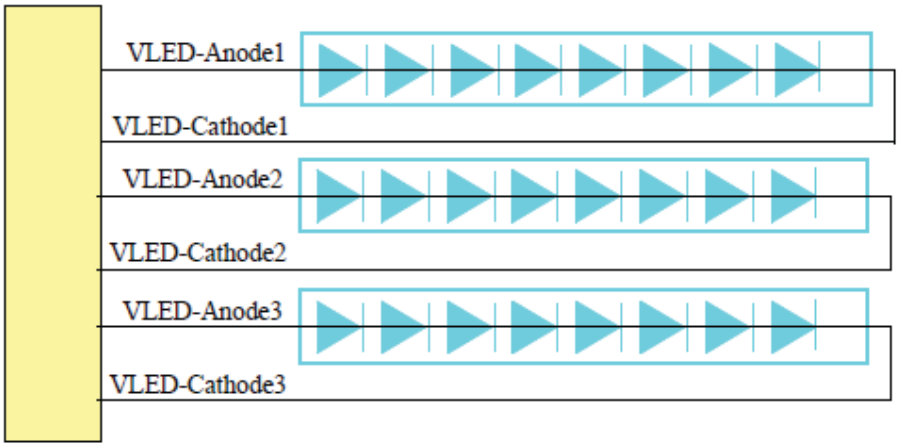

Pin No.	Pin Description
#1	VLED-Anode1
#2	VLED-Cathode1
#3	VLED-Anode2
#4	VLED-Cathode2
#5	VLED-Anode3
#6	VLED-Cathode3

Note) LED FPC Connector: 04-6298-006-000-883(Kyocera)
or compatible connector is preferred

5-3 Touch Panel Unit

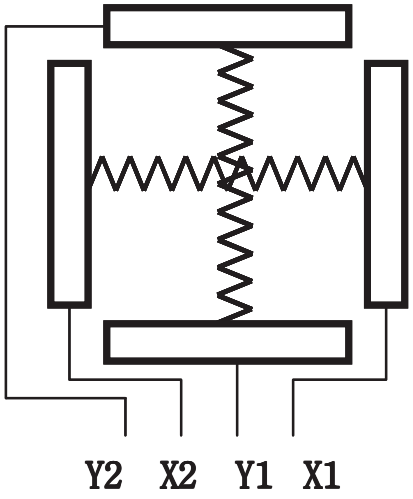

Top View

X : Upper electrode
Y : Lower electrode

Pin No.	Symbol	Description
#1	Y2	TSP Top
#2	X2	TSP Left
#3	Y1	TSP Bottom
#4	X1	TSP Right

*Note) TSP FPC Connector: FH19C-4S-0.5SH (Hirose) or compatible connector is preferred

6. Input Terminal Pin Assignment

6.1 Input Signal & Power (Connector : 40Pin FPC Connector type, 0.5mm,

ex.) Hirose connector FH28H-40S-0.5SH or compatible Connector used.)

Pin No	Symbol	Description	I/O	Pin No	Symbol	Description	I/O
1	GND	GND	I	21	PD0	Graphic Data 0 (B0)	I
2	GND	GND	I	22	PD1	Graphic Data 1 (B1)	I
3	Vcc	System Power Supply	I	23	PD2	Graphic Data 2 (B2)	I
4	Vcc	System Power Supply	I	24	PD3	Graphic Data 3 (B3)	I
5	PD16	Graphic Data 16 (R0)	I	25	PD4	Graphic Data 4 (B4)	I
6	PD17	Graphic Data 17 (R1)	I	26	PD5	Graphic Data 5 (B5)	I
7	PD18	Graphic Data 18 (R2)	I	27	PD6	Graphic Data 6 (B6)	I
8	PD19	Graphic Data 19 (R3)	I	28	PD7	Graphic Data 7 (B7)	I
9	PD20	Graphic Data 20 (R4)	I	29	GND	GND	I
10	PD21	Graphic Data 21 (R5)	I	30	DOTCLK	DOT CLOCK	I
11	PD22	Graphic Data 22 (R6)	I	31	PCI	Display Mode	I
12	PD23	Graphic Data 23 (R7)	I	32	HSYNC	HSYNC	I
13	PD8	Graphic Data 8 (G0)	I	33	VSYNC	VSYNC	I
14	PD9	Graphic Data 9 (G1)	I	34	DE	Data Enabling Signal	I
15	PD10	Graphic Data 10 (G2)	I	35	NC	No Connect	-
16	PD11	Graphic Data 11 (G3)	I	36	NC	No Connect	-
17	PD12	Graphic Data 12 (G4)	I	37	GND	GND	I
18	PD13	Graphic Data 13 (G5)	I	38	GND	GND	I
19	PD14	Graphic Data 14 (G6)	I	39	NC	No Connect	-
20	PD15	Graphic Data 15 (G7)	I	40	NC	No Connect	-

6.2 Input Signal, Basic Display Colors and Gray Scale of Each Colors

COLOR	DISPLAY	DATA SIGNAL																								GRAY SCALE LEVEL
		RED								GREEN								BLUE								
		R0	R1	R2	R3	R4	R5	R6	R7	G0	G1	G2	G3	G4	G5	G6	G7	B0	B1	B2	B3	B4	B5	B6	B7	
BASIC COLOR	BLACK	0	0	0	0	0	0	0	0	0	0	0	0	0	0	0	0	0	0	0	0	0	0	0	0	-
	BLUE	0	0	0	0	0	0	0	0	0	0	0	0	0	0	0	0	1	1	1	1	1	1	1	1	-
	GREEN	0	0	0	0	0	0	0	0	1	1	1	1	1	1	1	1	0	0	0	0	0	0	0	0	-
	CYAN	0	0	0	0	0	0	0	0	1	1	1	1	1	1	1	1	1	1	1	1	1	1	1	1	-
	RED	1	1	1	1	1	1	1	1	0	0	0	0	0	0	0	0	0	0	0	0	0	0	0	0	-
	MAGENTA	1	1	1	1	1	1	1	1	0	0	0	0	0	0	0	0	1	1	1	1	1	1	1	1	-
	YELLOW	1	1	1	1	1	1	1	1	1	1	1	1	1	1	1	1	0	0	0	0	0	0	0	0	-
	WHITE	1	1	1	1	1	1	1	1	1	1	1	1	1	1	1	1	1	1	1	1	1	1	1	1	-
GRAY SCALE OF RED	BLACK	0	0	0	0	0	0	0	0	0	0	0	0	0	0	0	0	0	0	0	0	0	0	0	0	R0
	DARK ↑	1	0	0	0	0	0	0	0	0	0	0	0	0	0	0	0	0	0	0	0	0	0	0	0	R1
		0	1	0	0	0	0	0	0	0	0	0	0	0	0	0	0	0	0	0	0	0	0	0	0	R2
		:	:	:	:	:	:	:	:	:	:	:	:	:	:	:	:	:	:	:	:	:	:	:	:	R3~R252
	↓	:	:	:	:	:	:	:	:	:	:	:	:	:	:	:	:	:	:	:	:	:	:	:	:	
	LIGHT	1	0	1	1	1	1	1	1	0	0	0	0	0	0	0	0	0	0	0	0	0	0	0	0	R253
		0	1	1	1	1	1	1	1	0	0	0	0	0	0	0	0	0	0	0	0	0	0	0	0	R254
	RED	1	1	1	1	1	1	1	1	0	0	0	0	0	0	0	0	0	0	0	0	0	0	0	0	R255
GRAY SCALE OF GREEN	BLACK	0	0	0	0	0	0	0	0	0	0	0	0	0	0	0	0	0	0	0	0	0	0	0	0	G0
	DARK ↑	0	0	0	0	0	0	0	0	1	0	0	0	0	0	0	0	0	0	0	0	0	0	0	0	G1
		0	0	0	0	0	0	0	0	0	1	0	0	0	0	0	0	0	0	0	0	0	0	0	0	G2
		:			:	:	:	:	:	:			:	:	:	:	:	:			:	:	:	:	:	G3~G252
	↓	:			:	:	:	:	:	:			:	:	:	:	:	:			:	:	:	:	:	
	LIGHT	0	0	0	0	0	0	0	0	1	0	1	1	1	1	1	1	0	0	0	0	0	0	0	0	G253
		0	0	0	0	0	0	0	0	0	1	1	1	1	1	1	1	0	0	0	0	0	0	0	0	G254
	GREEN	0	0	0	0	0	0	0	0	1	1	1	1	1	1	1	1	0	0	0	0	0	0	0	0	G255
GRAY SCALE OF BLUE	BLACK	0	0	0	0	0	0	0	0	0	0	0	0	0	0	0	0	0	0	0	0	0	0	0	0	B0
	DARK ↑	0	0	0	0	0	0	0	0	0	0	0	0	0	0	0	0	1	0	0	0	0	0	0	0	B1
		0	0	0	0	0	0	0	0	0	0	0	0	0	0	0	0	0	1	0	0	0	0	0	0	B2
		:	:	:	:	:	:	:	:	:	:	:	:	:	:	:	:	:	:	:	:	:	:	:	:	B3~B252
	↓	:	:	:	:	:	:	:	:	:	:	:	:	:	:	:	:	:	:	:	:	:	:	:	:	
	LIGHT	0	0	0	0	0	0	0	0	0	0	0	0	0	0	0	0	1	0	1	1	1	1	1	1	B253
		0	0	0	0	0	0	0	0	0	0	0	0	0	0	0	0	0	1	1	1	1	1	1	1	B254
	BLUE	0	0	0	0	0	0	0	0	0	0	0	0	0	0	0	0	1	1	1	1	1	1	1	1	B255

Note) Definition of Gray :

Rn : Red Gray, Gn : Green Gray, Bn : Blue Gray (n = Gray level)

Input Signal : 0 = Low level voltage, 1 = High level voltage

6.3 Pixel Format

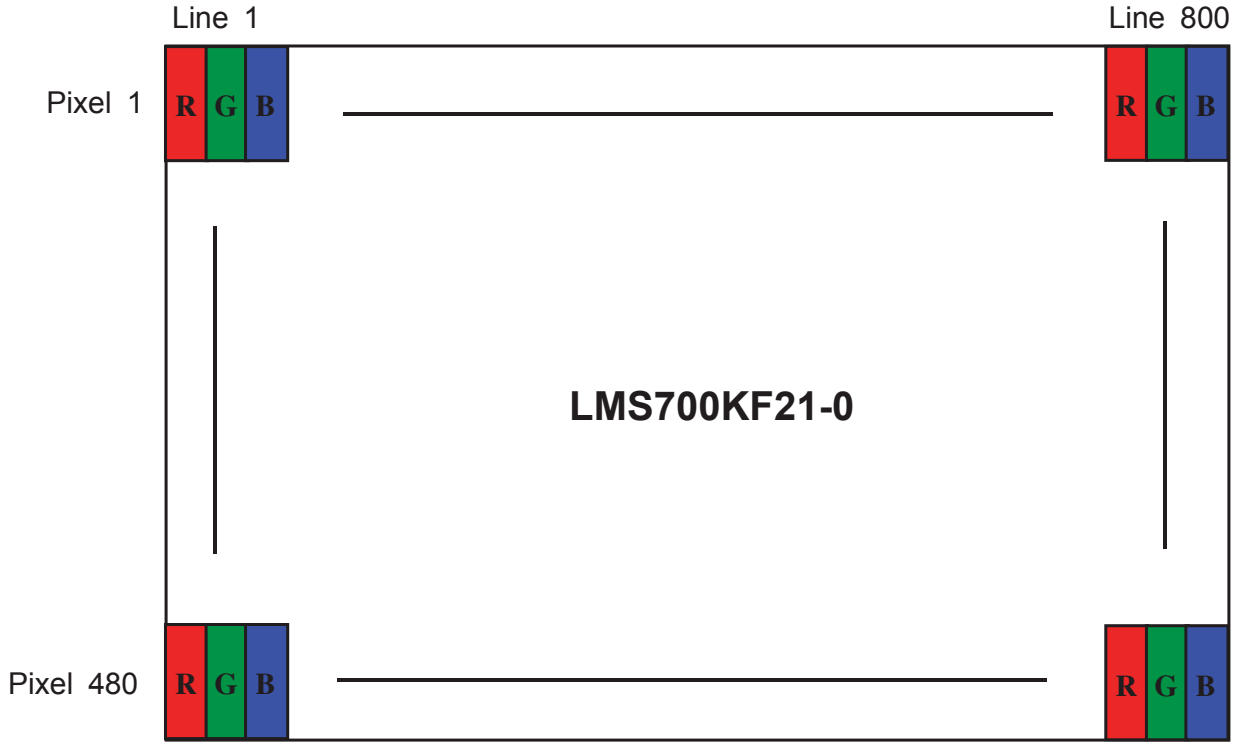

7. INTERFACE TIMING

7-1. Vertical / Horizontal Timing in sync mode

Signal	Symbol	Min.	Typ.	Max.	Unit	Note
Frame Frequency	fFRM	-	60	-	Hz	
Vertical Back porch	VBP	-	8	-	H	*Note1
Vertical Front porch	VFP	-	5	-	H	*Note1
Horizontal Back porch	HBP	-	16	-	DOTCLK	*Note1
Horizontal Front porch	HFP	-	8	-	DOTCLK	*Note1
DOTCLK Frequency	f_{DOTCLK}	-	24.5	-	MHz	@fFRM=60Hz

7.2 Interface Timing (sync mode)

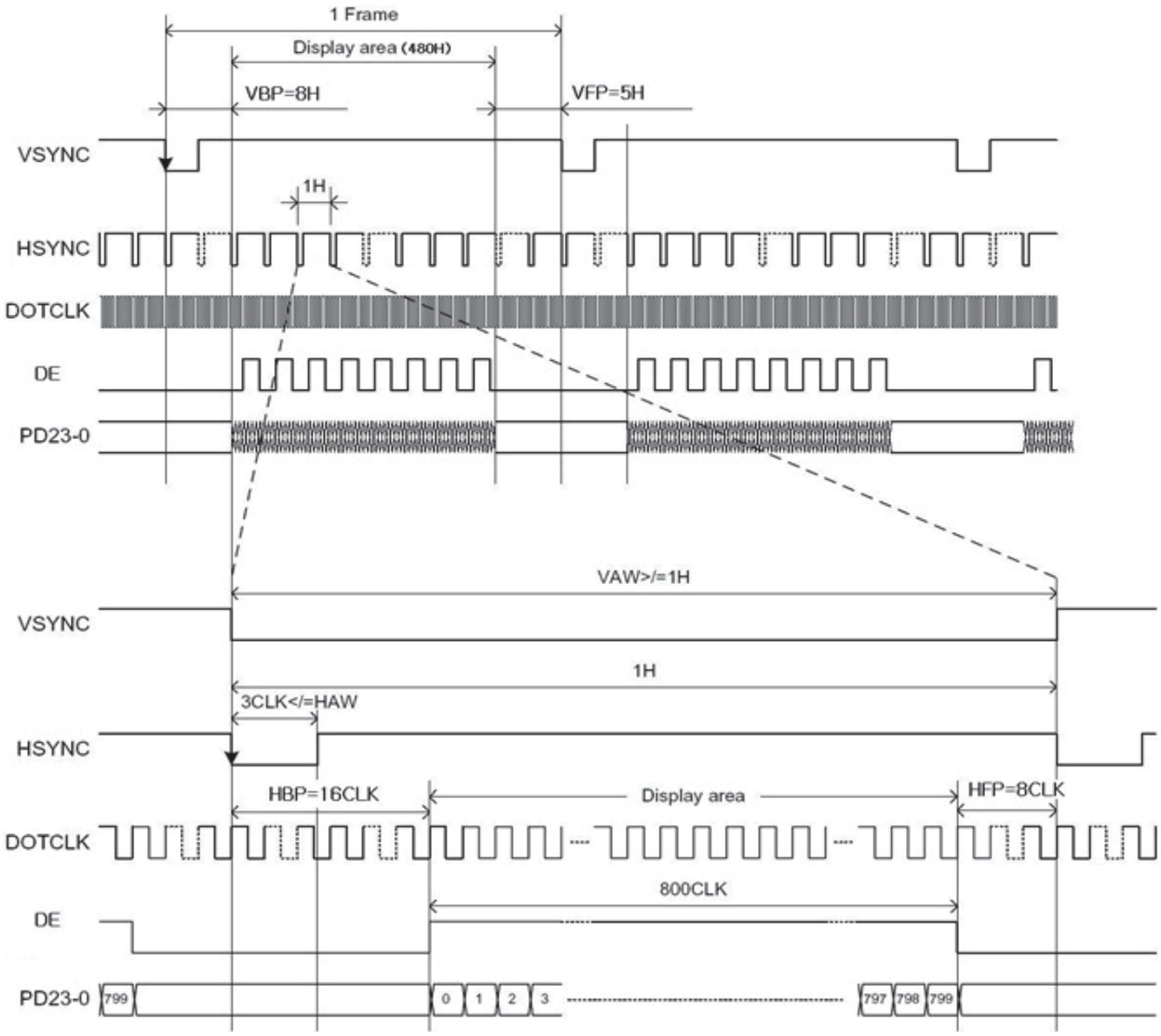

7.3 AC Characteristic

(Ta=-20 to +60 °C)

Parameter	Synbol	min	Typ.	Max	Unit	Condition
VDD Power In Slew Rate	TPOR	-	-	20	ms	From 0% to 90% of VDD
RSTB pulse width	TRst	50	-	-	us	
Dotclk cycle time	Tcph	20	-	-	ns	
Dotclk pulse duty	Tcwh	40	50	60	%	
VSync setup time	Tvst	8	-	-	ns	
VSync hold time	Tvhd	8	-	-	ns	
HSync setup time	Thst	8	-	-	ns	
HSync hold time	Thhd	8	-	-	ns	
Data set-up time	Tdsu	8	-	-	ns	
Data hold time	Tdhd	8	-	-	ns	
DE setup time	Tesu	8	-	-	ns	
DE hold time	Tehd	8	-	-	ns	

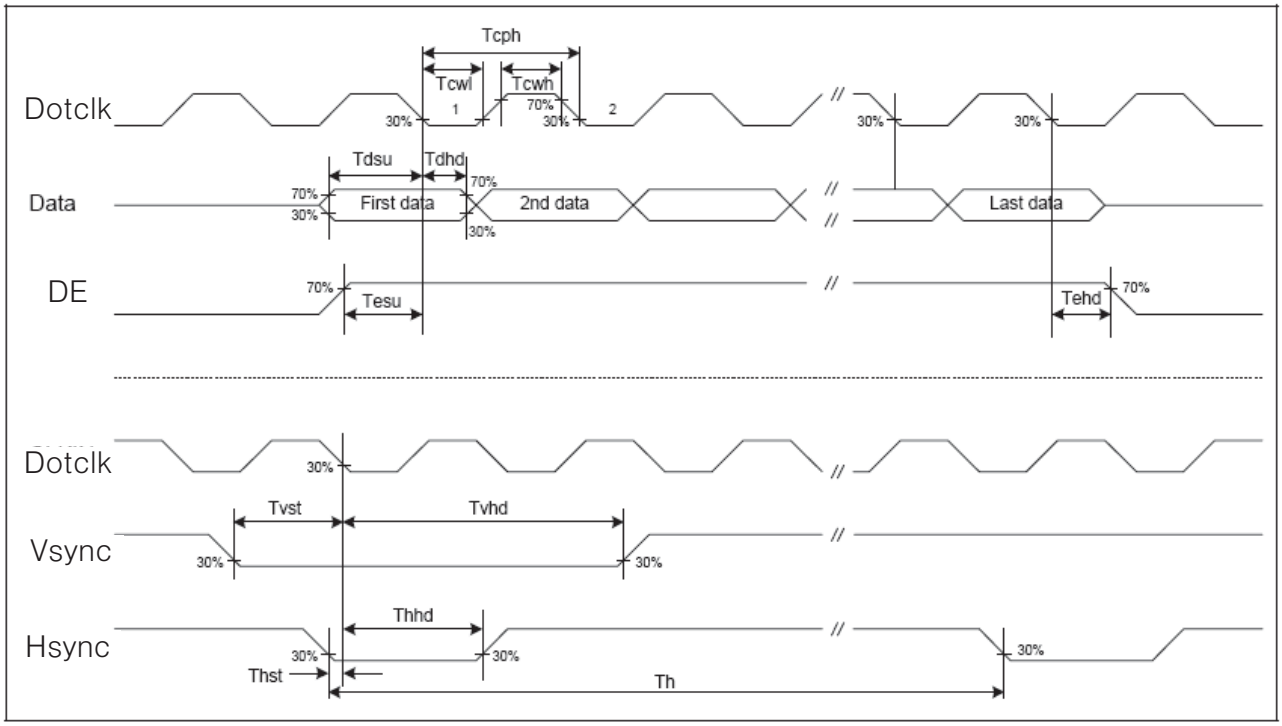

8. Power On/Off sequence

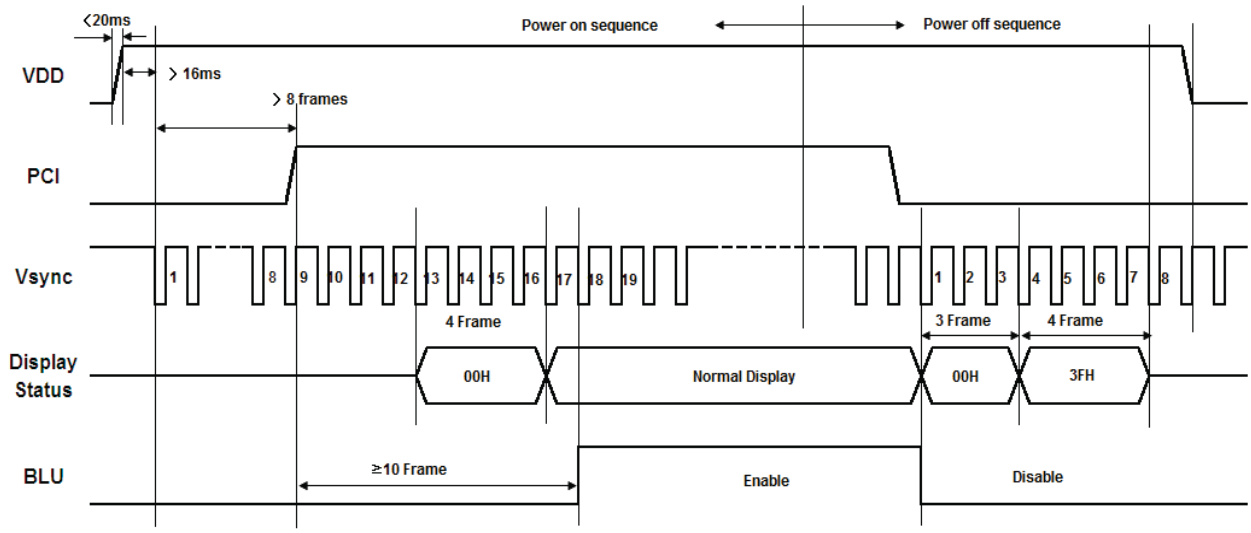

Note : PCI low pulse width should be kept for at least 8 frames to follow normal power on/off sequence

9. Product label

9.1 Product label position on TFT-LCD Module

- See the appendix

9.2 Product label format

LMS700KF21-002

6AAV06700001 V0F07

S/N Dot	3Digit	1Digit	1Digit	1Digit	1Digit	5Digit
Classification	Panel Code	Module Site	YEAR	Month	DA Y	S/N
Marking	6AA	V(VODA)	0	6(June)	7	00001
Note			0~9	1~9, A~C	1~9, A~X	

10. General Precautions

10.1 Handling

(a) When the module is assembled, it should be attached to the system firmly. Be careful not to twist and bend the module.

(b) Refrain from strong mechanical shock and / or any force to the module. In addition to damage, this may cause improper operation or damage to the module and back-light unit.

(c) Note that polarizers are very fragile and could be easily damaged. Do not press or scratch the surface harder than a HB pencil lead.

(d) Wipe off water droplets or oil immediately. If you leave the droplets for a long time, Staining and discoloration may occur.

(e) If the surface of the polarizer is dirty, clean it using some absorbent cotton or soft cloth.

(f) The desirable cleaners are water, IPA(Isopropyl Alcohol) or Hexane. Do not use Ketone type materials(ex. Acetone), Ethyl alcohol, Toluene, Ethyl acid or Methyl chloride. It might permanent damage to the polarizer due to chemical reaction.

(g) If the liquid crystal material leaks from the panel, it should be kept away from the eyes or mouth. In case of contact with hands, legs or clothes, it must be washed away thoroughly with soap.

(h) Protect the module from static , it may cause damage to the Integrated Gate Circuit.

(i) Use finger-stalls with soft gloves in order to keep display clean during the incoming inspection and assembly process.

(j) Do not disassemble the module.

(k) Protection film for polarizer on the module shall be slowly peeled off just before use so that the electrostatic charge can be minimized.

(l) Pins of I/F connector shall not be touched directly with bare hands

10.2 Storage

(a) Do not leave the panel in high temperature, and high humidity for a long time. It is highly recommended to store the module with temperature from 0 to 35°C and relative humidity of less than 70%.

(b) Do not store the TFT-LCD module in direct sunlight.

(c) The module shall be stored in a dark place. It is prohibited to apply sunlight or fluorescent light during the store.

10.3 Operation

(a) Do not connect, disconnect the module in the "Power On" condition.

(b) Power supply should always be turned on/off by the "Power on/off sequence"

10.4 Others

(a) The Liquid crystal is deteriorated by ultraviolet, do not leave it in direct sunlight and strong ultraviolet ray for many hours.

(b) Avoid condensation of water. It may result in improper operation or disconnection of electrode.

(c) Do not exceed the absolute maximum rating value. (the supply voltage variation, input voltage variation, variation in part contents and environmental temperature, and so on) Otherwise the panel may be damaged.

(d) If the panel displays the same pattern continuously for a long period of time, it can be the situation when the image "Sticks" to the screen.

(e) This panel has its circuitry FPC on the bottom side and should be handled carefully in order not to be stressed.

11. Reliability Test Result

11.1 Condition

Item		Condition	Test Result	Note
High Temperature Operating Life test		70℃, 256HR	PASS	-
Low Temperature Operating Life test		-20℃, 256HR	PASS	-
Thermal Humidity Bias		60℃, 93%RH, 256HR	PASS	-
Temperature Cycle ON/OFF test		-30℃ ↔ 70℃, ON/OFF, 5CY	PASS	(1)
High Temperature Storage test		85℃, 256HR	PASS	-
Low Temperature Storage test		−40℃, 256HR	PASS	-
Thermal Shock test		-40℃ ⇔ 85℃, 30CY	PASS	(2)
ESD	Contact	±8kV,150pF/330Ω	PASS	(3)
	Air	±15kV,150pF/330Ω	PASS	
Box진동		200Hz,Random진동,1.047Grms, XYZ축 각 1시간	PASS	(4)
Box Drop		1각 3능 6면	PASS	-

Note (1) ON Time over 10 seconds, OFF Time under 10 seconds

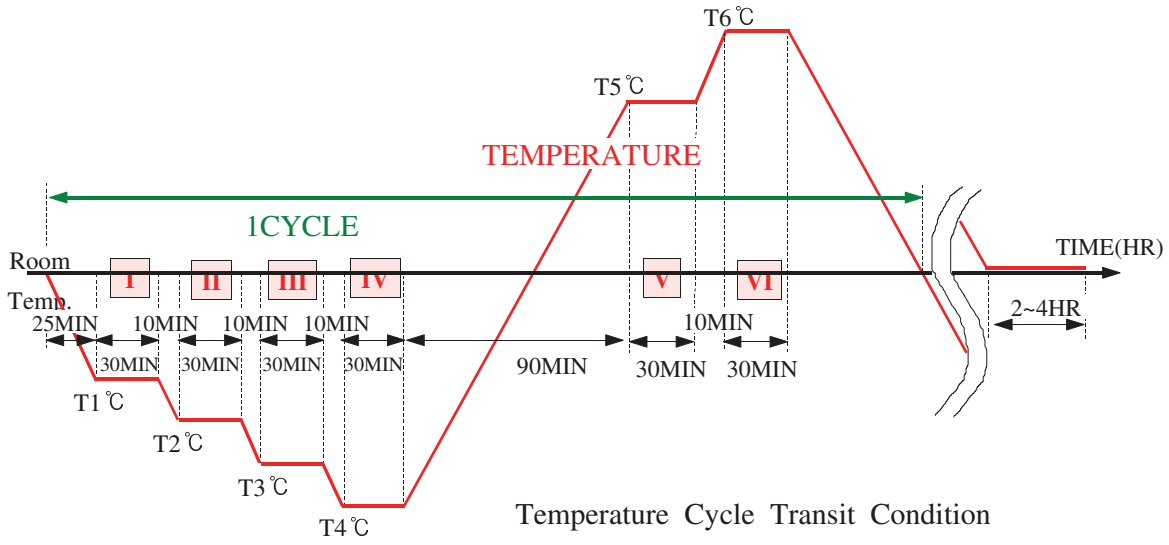

Temperature Cycle Transit Condition

Note (2) STORAGE

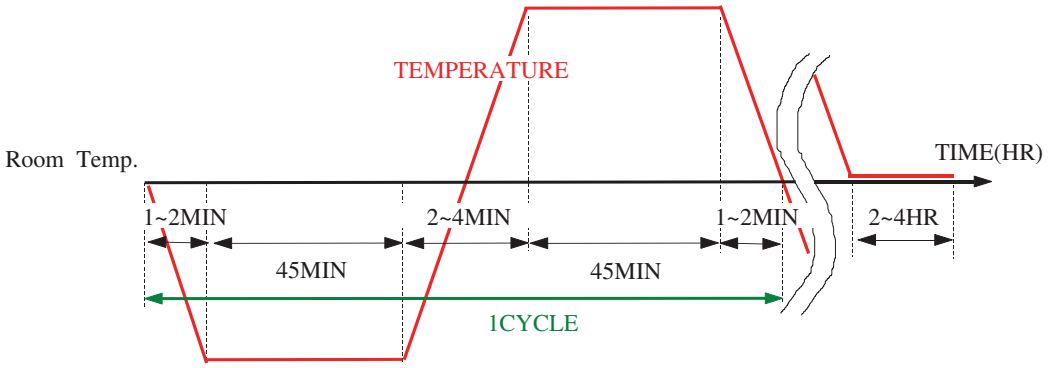

Thermal Shock Transit Condition

Note (3) Main-LCD, 5 times to every 4 corners of active area

Note (4) Basic transportation by common carrier environmental, 514.4 MIL-STD-810E

OVERALL RMS LEVEL	BREAK POINT					
	FRQUENCY	PSD VALUE	FRQUENCY	PSD VALUE	FRQUENCY	PSD VALUE
0.74G	10Hz	0.00650	121Hz	0.00300	340Hz	0.00003
	20Hz	0.00650	200Hz	0.00300	500Hz	0.00015
	120Hz	0.00020	240Hz	0.00150	-	-

11.2 Judgement

(1) Main LCD should work under the normal condition.

(2) After the temperature and humidity test,
the luminance and CR(Contrast Ratio) should not be changed over 50% compared with those before the test.

Approval

9. Packing

9.1 Box Pack

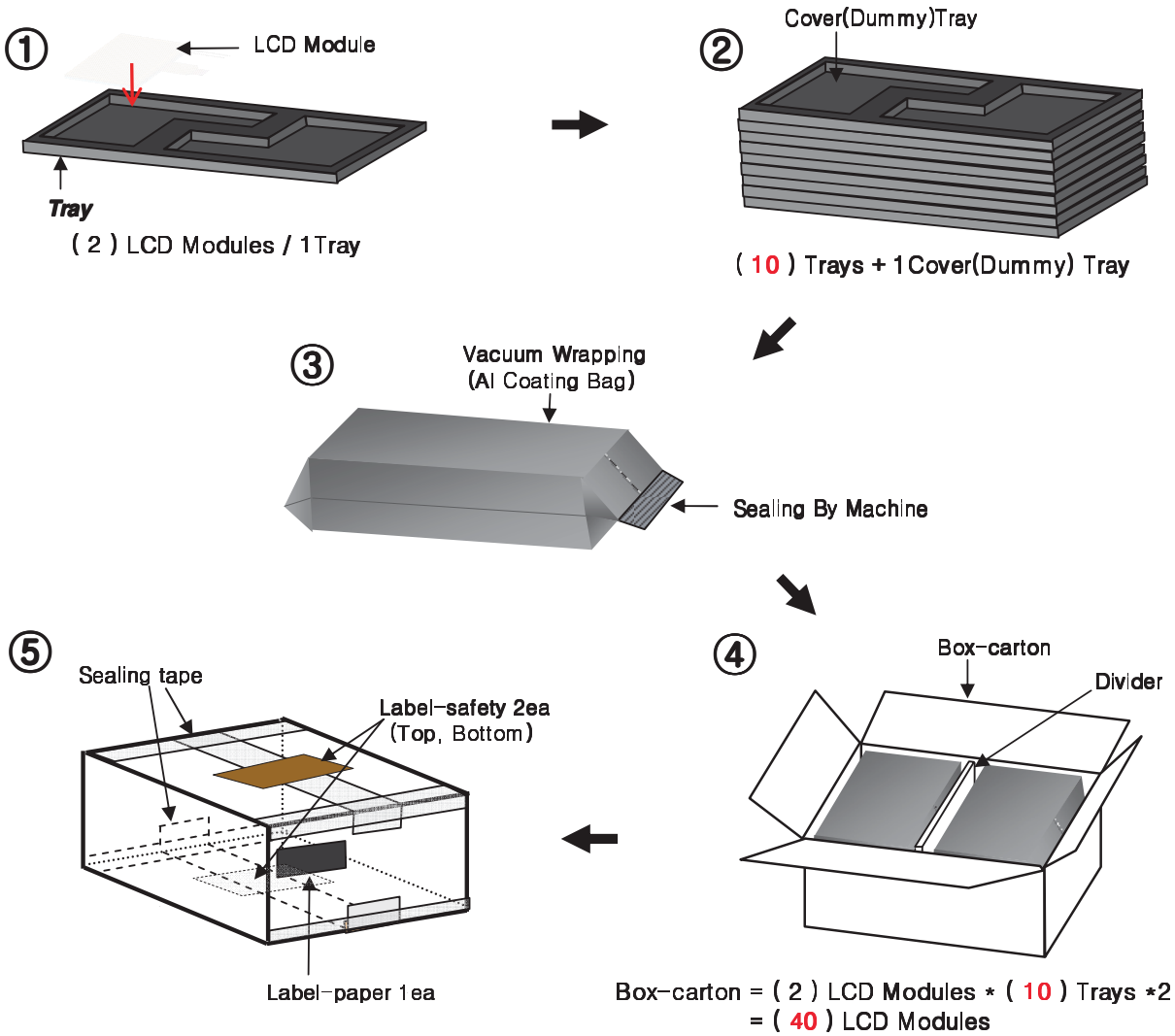

Note

(1) Total :Box-carton approx. : (9)kg

(2) Size : 579(L) x 384(W) x 157(H)

(3) Place the LCD Module in the tray facing the active area direction.

(4) Stack the trays and cover (dummy) tray.

(5) Resistance of tray surface : 10^6~10^9 Ω

(6) Wrap the Al coating bag by vacuum sealing machine.

(7) Put the bag in the Box-carton .

(8) Seal the Box-carton and affix the Label-safety & Label-paper.

Approval

9.2 Label

* Label-paper

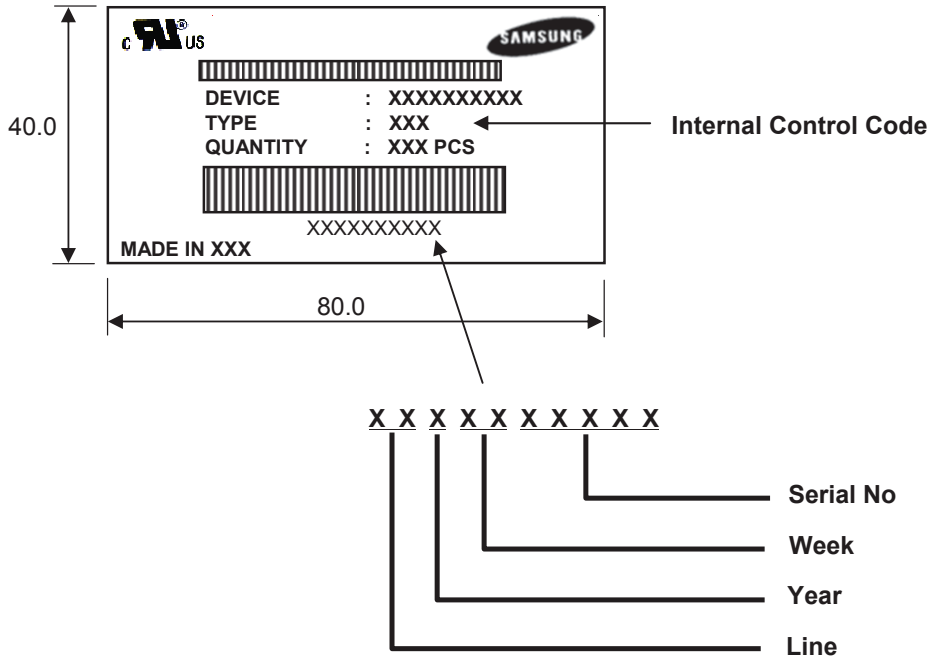

* Label-safety

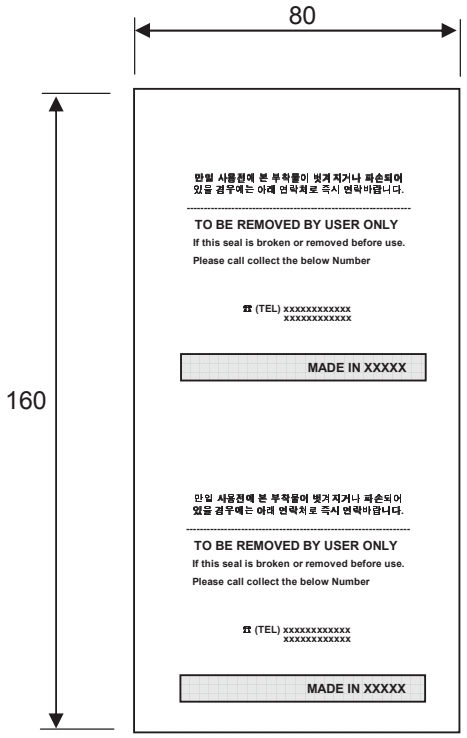

Approval

9.3 Packing for Small Quantities

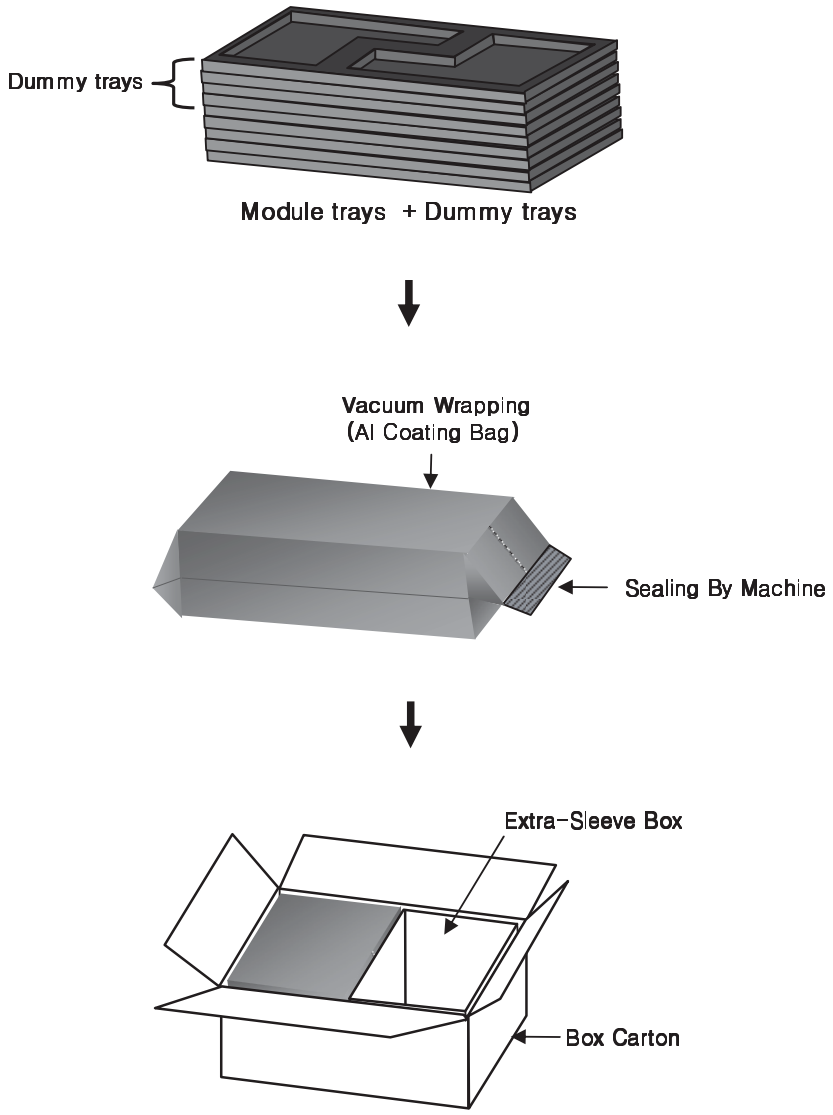

Note

(1) When package quantity is small, LCD Modules containing trays are stacked the bottom, and dummy trays are stacked at the top of package, then wrap the Al coating bag by vacuum sealing machine

(2) When only one tray bag (Vacuum wrapping bag) is available, dummy box is inserted into the vacant space

Approval

9.4 Over Pack

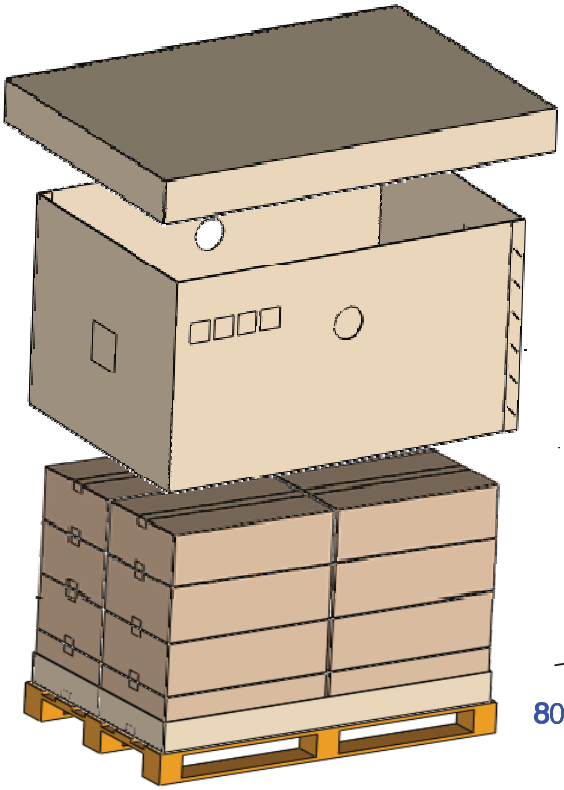

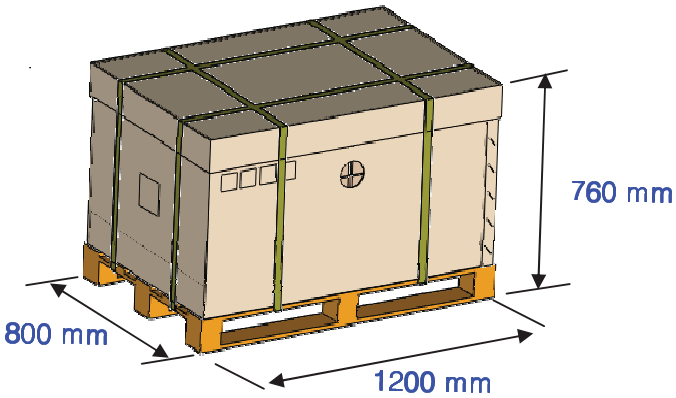

(2)lines*(2)rows*(4)columns

9.5 Packing for Small Quantities

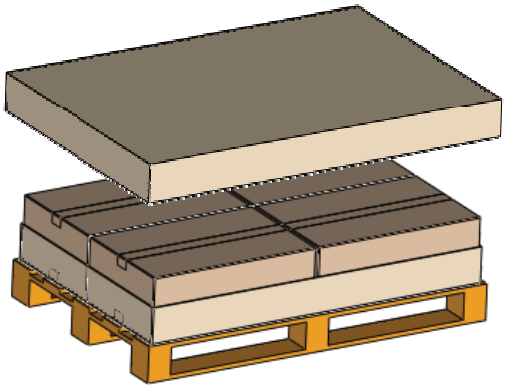

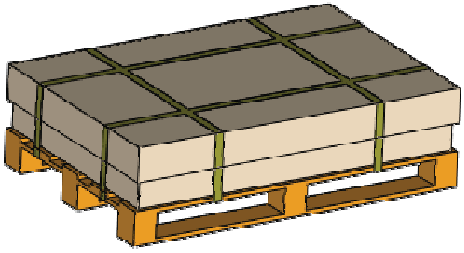

Approval

9.6 Over Pack Attach

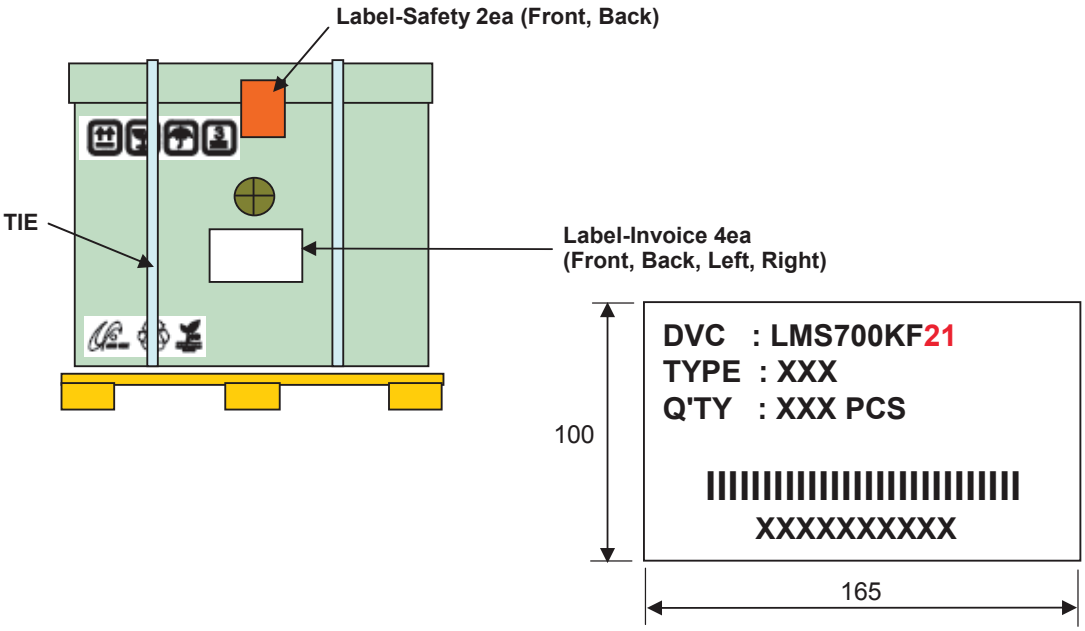

Box-Carton		
Box-Sleeve (pallet 구성)		

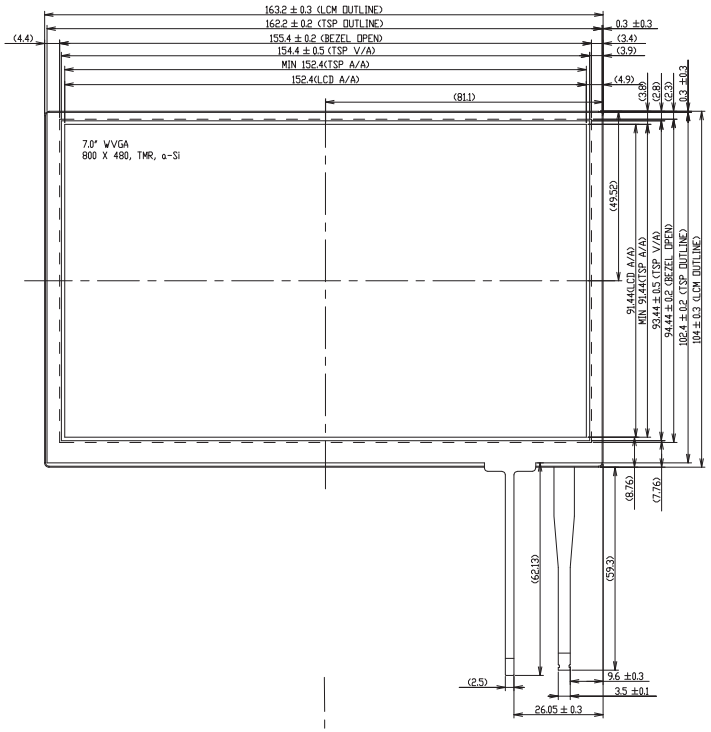

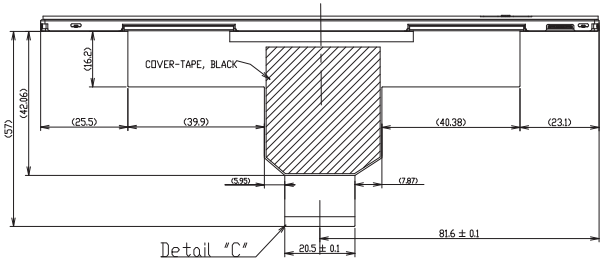

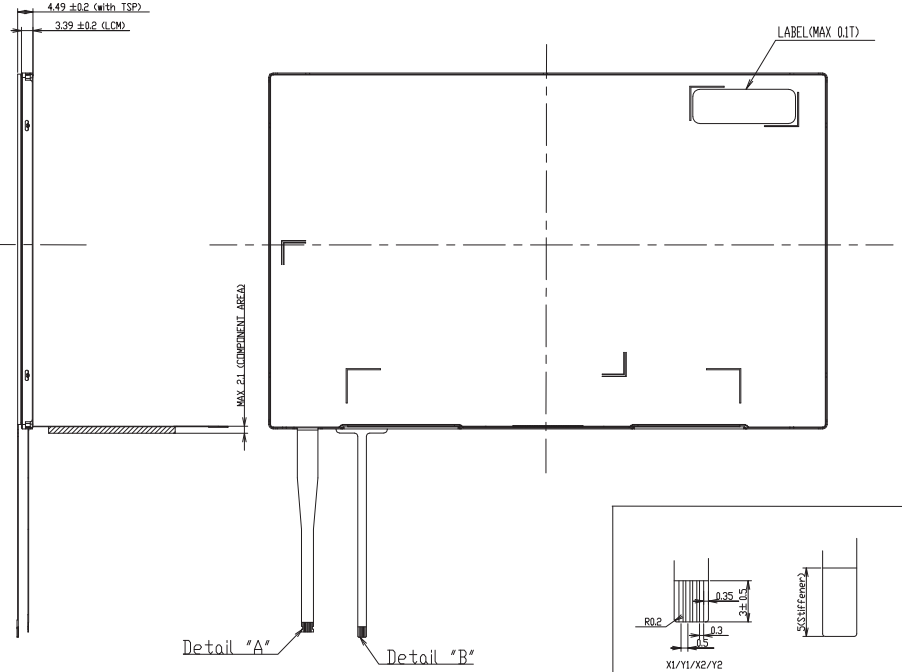

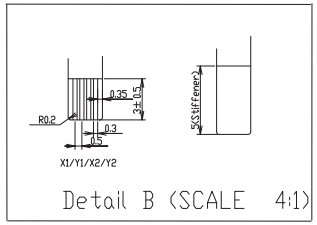

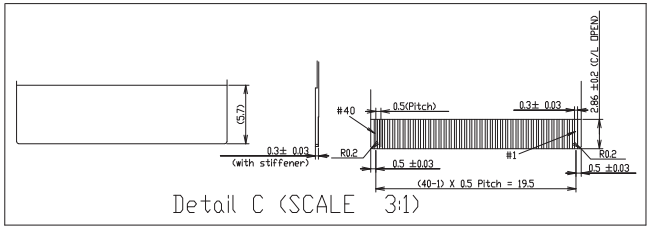

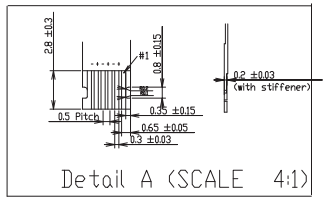

NOTE
1. DESCRIPTION : 7.0" WVGA, 800 X 480, TMR, a-Si
2. UNIT : mm
3. BURR CONTROL: Max 0.03
   Max 0.02(FPC TOUCH PART)
   BURR DIRECTION: INSIDE
   ADDING HALF IMPACTING PROCESSING
   ON PIERCING AREA
4. EJECTOR PIN AND GATE REMNANTS TO BE SUB-FLUSH
5. LCD MODULE BENDING ALLOWANCE SPEC : ±0.3
6. UNLESS OTHERWISE SPECIFIED TOLERANCE OF RADIUS : ±0.3
7. THIS MODULE IS ACCORDING TO ENVIRONMENTAL REQUIREMENTS(ROHS).

NOTICE OF PROPRIETARY PROPERTY

THE INFORMATION CONTAINED HEREIN IS THE PROPRIETARY PROPERTY OF SAMSUNG ELECTRONICS,THE POSSESSOR AGREES TO THE FOLLOWING:
1) NOT TO REPRODUCE OR COPY
2) NOT TO REVEAL OR PUBLISH IT IN WHOLE OR PART
3) ALL RIGHTS RESERVED

REV	DATE	DESCRIPTION OF REVISION	REASON
001	10.01.21	A/A shifted to right, by 0.5mm compared to LMS700KF16, L4	L4 -> L6

GENERAL TOLERANCE			
STEP	LEV.1	LEV.2	LEV.3
0 < X < 4	±0.05	±0.10	±0.20
4 < X < 16	±0.08	±0.15	±0.30
16 < X < 64	±0.12	±0.25	±0.50
64 < X < 256	±0.25	±0.40	±0.80

UNIT	mm	DES'D BY	CHK'D BY	APP'D BY	MODEL NAME	LMS700KF21		
SCALE	1:1	J.C.PARK	J.S.OH	S.H.LEE				
TOLERANCE LEVEL 3		10.09.03	10.09.03	10.09.03	PART NAME	OUTLINE DIMENSION		
SAMSUNG MOBILE DISPLAY		PROJECTION	STD.TOL	SIZE	CODE NO.	-	SHEET	1/1
			-	A2	SPEC NO.	-	VER	001

SMD CONFIDENTIAL