SAMSUNG
MOBILE DISPLAY

LEAD-FREE

Date : Dec. 13th, 2011

Specification for Approval

Product Name : AMOLED Module

Model Name : AMS495QA04

Description : 4.95" qHD(960×544) 16M Colors

Proposed by			Customer's Approval
Designed	Checked	Approved	
Jae Young Oh	Eun Jung Oh	Eui Soon Lee	

All information contained within this document is strictly private and belongs to the Samsung Mobile D isplay Co,. Ltd. It is to be treated as being marked "Proprietary and Confidential" and is intended only for the recipient(s) to whom it has been sent by us. It may also be legally privileged.
Also, contents in this document are subject to change after prior notice to the custome

Revision History

Date	Rev. No.	Contents	Remark
Mar.4th.'11	0.0	- Initial issue for EVT1	-
May.26th '11	0.1	- Updated for EVT3R **3. Features** Polarizer spec is updated. **4. Mechanical Specification** Mechanical specification is updated. **6. Electrical Characteristics** Electrical spec is updated. **7. Electro-Optical characteristics** Optical spec is updated. **9-3. Panel Condition Set** Condition set is updated. **9-4. Analog Power Condition Set** Condition set is updated. **9-5. Set Gamma Register Set** Register set is updated. **9-6. ELVSS Condition Set** Condition set is updated. **9-8. Gamma Condition Setting Value per Each brightness** Gamma set is updated. **10-3. inspection Item** is updated. **13-1. Product Drawing** Drawing is updated. **13-2-1 Box Pack** Packing design is updated.	
June. 24th '11	0.2	**6. Electrical Characteristics** Characteristics is updated. **9-6. ELVSS Condition Set** Temp_swire/ ELVSS setting is updated. Add Read sequence guide. **9-6-1 Sequence and Read guide** add sequence/read guide. **10-3. inspection Item** Add quality control area.	
July. 29th '11	1.0	**6. Electrical Characteristics** ELVSS spec is updated. IEL spec is added. **7. Electro-Optical characteristics** Brightness(White) Optical spec is updated. Color Coordination(White) spec is updated. **9-6. ELVSS Condition Set** Condition set is updated. **9-8. Gamma Condition Setting Value per Each brightness** Gamma table is updated **13-1. Product Drawing** drawing is updated for PVT and mass production **13-2. Packing Drawing** packing drawing is updated.	
August. 1st '11	1.1	**7. Electro-Optical characteristics** NOTE2 updated **7. Electro-Optical characteristics** add gamma value and NOTE6	
August 1st '11	1.2	**6. Electrical Characteristics** picture updated **14. Schematic** updated to final version	
August 26st '11	1.3	**13-1. Product Drawing** drawing is updated to final version **13-2-4 Over pack** drawing is updated to final version **13-2-5 Packing for small quantities** drawing is updated to final version **13-2-6 Over pack attach** drawing is updated to final version **13-2-7. Module Marking Rule** FPCB drawing is updated to final version	
September 20th '11	1.4	**6. Electrocal Characteristics Supply current(1) is updated to final version**	
October 15th '11	1.5	**10-3. Inspection Item updated**	
October 24th '11	1.6	**4. Mechanical Specification** dot size is corrected **10-3. Inspection Item** dot size is corrected	
December 13th '11	2.0	**All Document No./character** is updated from AMS495QA01 to AMS495QA04 **9-5.Set Gamma Register Set** is updated from AMS495QA01 to AMS495QA04 **9-8. Gamma Condition Setting Value per Each brightness** is updated to final version(for AMS495QA04)	

Contents

1. Scope 5
2. Warranty 5
3. Features 6
4. Mechanical Specification 6
5. Maximum rating 6
6. Electrical characteristics 7
7. Electro-optical characteristics 8
8. Input/Output terminal 10
8-1. I/O Connection 10
8-2. Circuit Block Diagram (IC) 11
9. Recommended Operating Sequence 12
9-1. SPI-3line timing 12
9-2. Power on/off sequence 13
9-2-1. Power on sequence 13
9-2-2. Power off sequence 14
9-2-3. Power On Timing 15
9-3. Panel Condition Set 16
9-4. Analog Power Condition Set 16
9-5. Set Gamma Register Set 16
9-6. ELVSS Condition Set 17
9-6-1. Sequence and Read guide 18
9-7. Sleep-in / Sleep out Sequence 19
9-7-1. Sleep-in Sequence 19
9-7-2. Sleep-out Sequence 19
9-8. Gamma Condition Setting Value per Each brightness 20

10. Quality level 21
10-1. Environment Condition 21
10-2. Sampling Procedures for each item's acceptance table 22
10-3. Inspection Item 23

SAMSUNG Mobile Display CO., LTD.(All Rights Reserved).

11. Reliability 28
11-1. Test item 28
12. Handing Precautions 29
12-1. Mounting Method 29
12-2. Caution of AMOLED Handling and Cleaning 29
12-3. Caution Against Static Charge 29
12-4. Packing 30
12-5. Caution for Operation 30
12-6. Storage 30
12-7. Safety Precaution 31
12-8. Precautions before Use 31
13. Drawings 32
13-1. Product Drawing 32
13-2. Packing Drawing 33
13-2-1. Box Pack 33
13-2-2. Label 34
13-2-3. Packing for small quantities 35
13-2-4. Over pack 36
13-2-5. Packing for small quantities 36
13-2-6. Over pack attach 37
13-2-7. Module Marking Rule 38
14. Schematic Diagram 39

SAMSUNG Mobile Display CO., LTD.(All Rights Reserved).

1. Scope

This Specification defines general provisions as well as inspection standards for AM OLED module supplied by SAMSUNG Mobile Display Co., Ltd.,
If the event of unforeseen problems or unspecified items occurs, we naturally shall negotiate and agree to solution with customer.

2. Warranty

Basically, warranty term is 15 months of reliability characteristics of quality level after the outgoing date in SAMSUNG Mobile Display Co., Ltd., and SAMSUNG Mobile Display Co., Ltd., could compensate for defectives which happens within warranty term under condition that the products should be stored or be used as Specified under normal condition within the contents of Specification.
Otherwise, it is impossible to compensate for defectives when they happens by customer's mistake such as careless handing or circuit change, etc.
And after 15 months of warranty term, all replacements for defectives will be charged.

This Specification stipulates the final and comprehensive requirements for the respective products hereof. Beyond this Specification, it is responsibility of the customer to explicitly disclose any additional requirements, information or reservations regarding these requirements to Samsung Mobile Display prior to implementation, where any and all disclosures of the customer shall be with an authorized representative of Samsung Mobile Display in writing. Samsung Mobile Display shall not be responsible for safety, performance, functionality, compatibility of the system with which the SAMSUNG Mobile Display-supplied components are integrated unless such features have been expressly communicated and described in the Specification. SAMSUNG Mobile Display MAKES NO GUARANTY OR WARRANTY, EXPRESS OR IMPLIED , INCLUDING BUT NOT LIMITED TO MERCHANTABILITY OR FITNESS FOR A PARTICULAR PURPOSE, TO ANY PARTY.Moreover, any party should do their own due diligence regarding these requirements prior to implementation.

3. Features

1) Display Color : 16M Color (RGB)
2) Display Format : 4.95" qHD 960(W)×544(H)
3) Interface : SPI(3line), MIPI-DSI(2lane)
4) Driver IC : D53E6EA8966 by Magnachip
5) Polarizer : NZFUJDCVSRHCK(2 CoP) By NITTO

4. Mechanical Specification

Item	Specifications	Unit
Dimensional outline	116.54(W) X 73.92(H) X 1.66(T) (without FPCB)	mm
Number of dots	960(W) X RGB X 544(H)	Dots
Active area	109.44(W) X 62.02(H)	mm
Diagonal Inch	4.95	inch
Dots size	0.038(W) X 0.114(H)	mm

5. Maximum Rating

Item		Symbol	Min.	Max.	Unit	Note
Supply voltage	Logic Power	VDD	-0.3	4.0	V	(1),(2)
		VCI	-0.3	4.0	V	(1),(2)
	Power	ELVDD	-0.3	6.0	V	(3)
		ELVSS	-10	AGND+0.3	V	
Input voltage		VI	-0.3	VCCIO+0.3	V	(2)
Operating temperature		Top	-20	70	℃	-
Humidity		Hop	10	95	%(RH)	-
Storage temperature		Tstg	-30	85	℃	-

Note 1) VDD, VCI should satisfy the below condition of VDD, VCI > VSS (AGND).
Note 2) If the supplied voltage exceeds the maximum limitation,
Driver IC can be damaged permanently.
Therefore, while operating, it is recommend to use Driver IC
within the maximum electrical limitation.
If not, Driver IC can cause decreased reliability or operational problems.
Note 3) ELVDD/ELVSS come from user. These value are reference only.

SAMSUNG Mobile Display CO., LTD.(All Rights Reserved).

6. Electrical Characteristics

◎ Test Conditions:VDD=1.8V,VCI=3.0V,VSS=0V,Temp.=25℃,Full White unless otherwise specified.

Item		Symbol	Condition	Min.	Typ.	Max.	Unit	Note
Supply voltage	Logic	VDD	-	1.65	1.8	3.6	V	-
		VCI		2.8	3.0	3.6		
	Power	ELVDD		4.554	4.6	4.646		(4)
		ELVSS		-3.663	-3.7	-3.737		
Input Voltage	"H" level	VIH	1.65<VDD<2.30	0.7*VDD	-	VDD	V	(1)
			2.30<VDD.30	0.8*VDD		VDD		
	"L" level	VIL	1.65<VDD<2.30	0		0.3*VDD		
			2.30<VDD<3.60	0		0.2*VDD		
Output Voltage	"H" level	VOH	IOH = -0.4mA	VDD-0.4V	-	-	V	(2)
	"L" level	VOL	IOL = 0.4mA	-	-	0.4		
Leakage Current	Input leakage	ILI	VI= VSS or VDD	-1	-	1	uA	(3)
	output leakage	ILO		-1	-	1	uA	-
Supply Current (1)	Power 139cd/㎡ Full White	IPNL	ELVDD = 4.6V ELVSS = -3.7V (VBAT=3.8V)		200	264		
Supply Current (2)	EL Power 139cd/㎡ Full White	IELVDD (IELVSS)	DC/DC Converter Efficiency (82%)	-	75	99	mA	–
Module Current Consumption		IVDD	VDD=1.8V	-	2	4	mA	-
		IVCI	VCI=3.0V	-	40	72	mA	-
		Istby	VDD=1.8V	-	50	100	uA	-
			VCI=3.0V	-	150	300	uA	

Note1) VDD for SCL, DOUT, CSX ports
Note2) DIN ports. ELON pin = output level = VCI/AGND
Note3) CSX, RESX, SCL, DOUT ports.

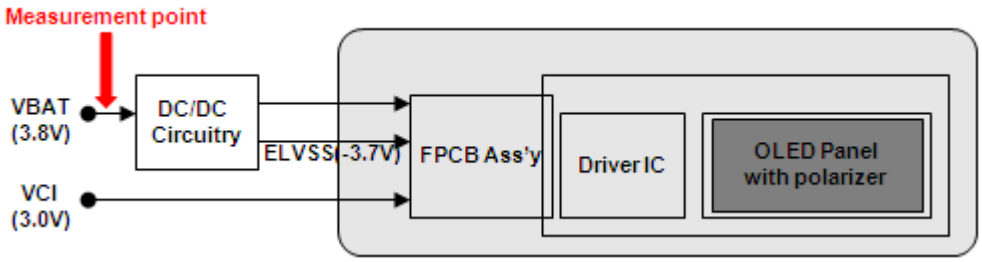

7. Electro-Optical characteristics

Item		Symbol	Temp	Condition	Min.	Typ.	Max.	Unit	Note
Brightness			25℃	Normal (White Mode)	109	139	169	cd/m²	(1)
Uniformity			25℃	Normal (White Mode)	80	90	-	%	(1)
Contrast ratio		K	25℃	Φ=0°,θ=0°	3000	6500	-	-	(2)
Color of CIE coordinate	White	x	25℃	Φ=0° θ=0°	0.277	0.297	0.317	-	(1),(2),(3) (4)
		y			0.286	0.306	0.326	-	
	Red	x			0.64	0.67	0.7	-	
		y			0.298	0.328	0.358	-	
	Green	x			0.2	0.25	0.3	-	
		y			0.65	0.7	0.75	-	
	Blue	x			0.097	0.137	0.177	-	
		y			0.02	0.06	0.1	-	
Color Gamut			25℃	vs. NTSC	85	100	-	%	-
Crosstalk			25℃		-	-	4%	%	(5)
Viewing angle			25℃	Upper/Down/Right/Left CR ratio ≥200	Over 80°				-
Response Time			25℃		-		1	ms	-
Gamma			25℃		-	2.2	-		(6)

Note (1) Uniformity measuring point

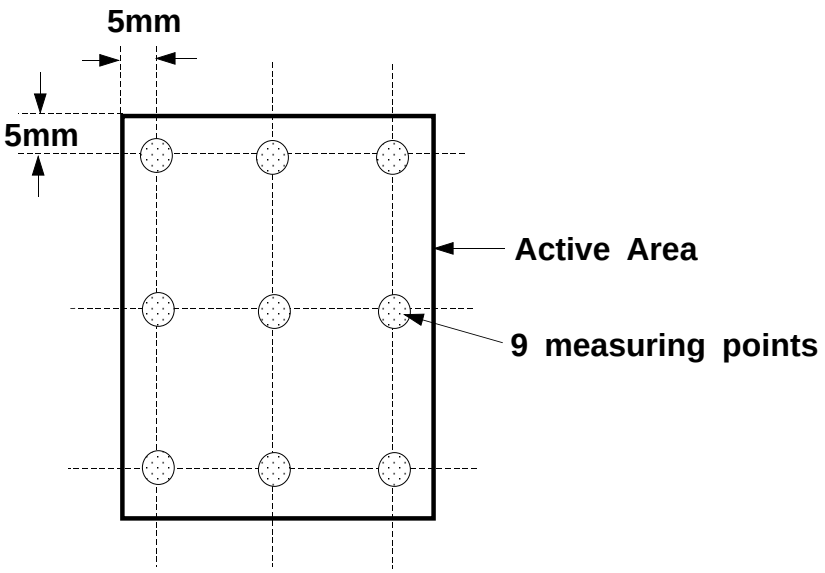

Uniformity = Lmin / Lmax * 100 [%]

SAMSUNG Mobile Display CO., LTD.(All Rights Reserved).

Note (2) Definition of contrast ratio (K)

$$\text{Contrast Ratio(K)} = \frac{\text{Brightness of White pattern center at } 139\text{cd/m}^2}{\text{Brightness of black pattern center at } 139\text{cd/m}^2}$$

Note (3) Optical measuring system, temperature regulated chamber
external Light : dark state

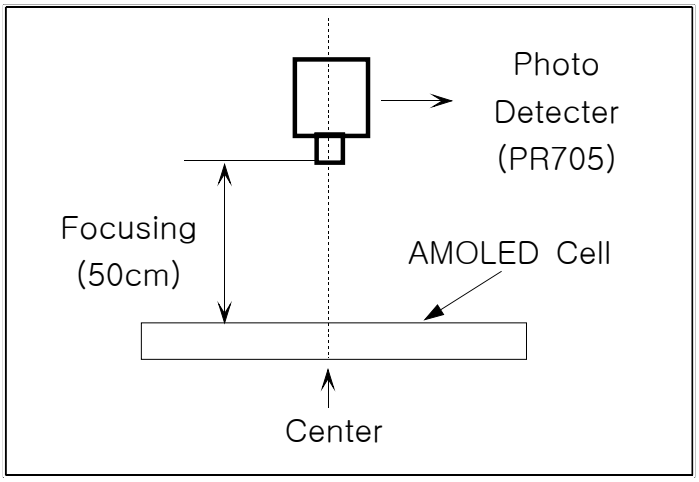

Note (4) Define of Φ and θ

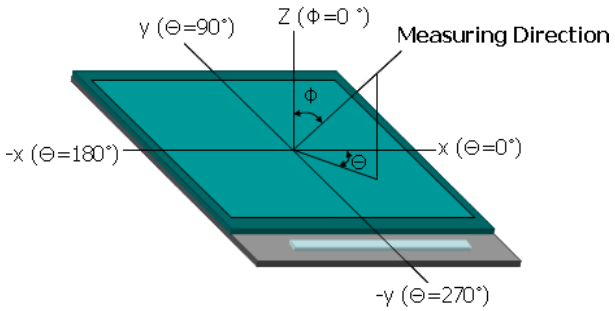

Note (5) Less than 4%, unless detected by visual.
If Crosstalk is detected by visual, we shall negotiate and agree to solution with customer.

Note) If Flicker is detected by visual, we shall negotiate and agree to solution with customer.

Note (6) gamma is calculated value

- gamma calculation formula

$$\log(L - L_b) = \gamma \log(V) + \log(a)$$

L_b = black luminance level, V = gray level

- Measurement point for gamma calculation

48gray, 72gray 104gray, 132gray, 164gray, 192gray, 224gray, 252gray, 255gray

8. Input/Output Terminal Assignment

8-1. I/O Connection

#	Pin name	Description	I/O	#	Pin name	Description	I/O
1	VCI	Power pin for analog	I	2	GND	Low voltage ground pin	I
3	VCI			4	AVDD	for TP	I
5	VDD	Power pin for logic I/O		6	AVDD	for TP	
7	VDD			8	GND	Low voltage ground pin	I
9	GND	Low voltage ground pin	I	10	ELVDD	Power pin for module analog	I
11	ELON	Module DCDC(ELVDD/ELVSS) on/off control signal(VCI level)	O	12	ELVDD		
13	RESX	Reset pin Initializing when RESX="L"	I	14	ELVSS	Power pin for module analog	I
15	SEL_REG	Command& parameter transfer selection “H” transfer by DBI type C(SPI) “L” transfer by DSI type	I	16	ELVSS		
17	GND	Low voltage ground pin	I	18	GND	Low voltage ground pin	I
19	MDN0	DSI interface Data Line 0-	I	20	CSX	Chip selection pin Data/Command in/out is possible when CSX="L"	I
21	MDP0	DSI interface Data Line 0+	I	22	DOUT	Serial data input pin	I
23	GND	Low voltage ground pin	I	24	DIN	Serial data output pin	O
25	MCN	DSI interface Strobe clock-	I	26	SCL	Serial data transfer clock input pin	I
27	MCP	DSI interface Strobe clock+	I	28	OTPV	for SMD internal use only. Open when is not used	-
29	GND	Low voltage ground pin	I	30	GND	Low voltage ground pin	I
31	MDN1	DSI interface Data Line 1-	I	32	TP_SPI_CS	for TP	I
33	MDP1	DSI interface Data Line 1+	I	34	TP_SPI_MOSI	for TP	I
35	GND	Low voltage ground pin	I	36	TP_SPI_MISO	for TP	O
37	TP_RESET	for TP	I	38	TP_SPI_CLK	for TP	I
39	TP_INT	for TP	I	40	GND	Low voltage ground pin	I

SAMSUNG Mobile Display CO., LTD.(All Rights Reserved).

8-2. Circuit block diagram (IC)

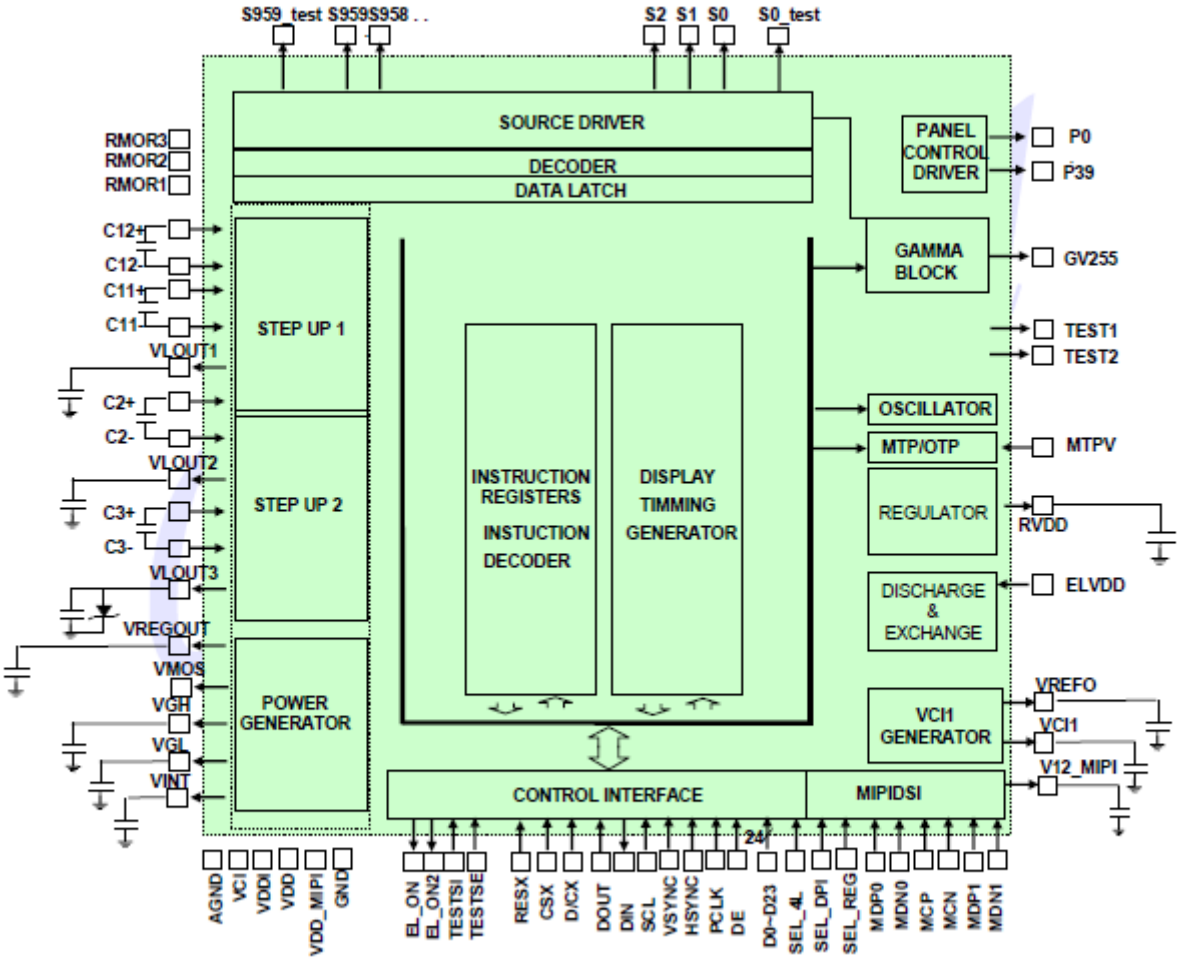

SAMSUNG Mobile Display CO., LTD.(All Rights Reserved).

9 Recommended Operating Sequence

9-1. SPI-3line timing

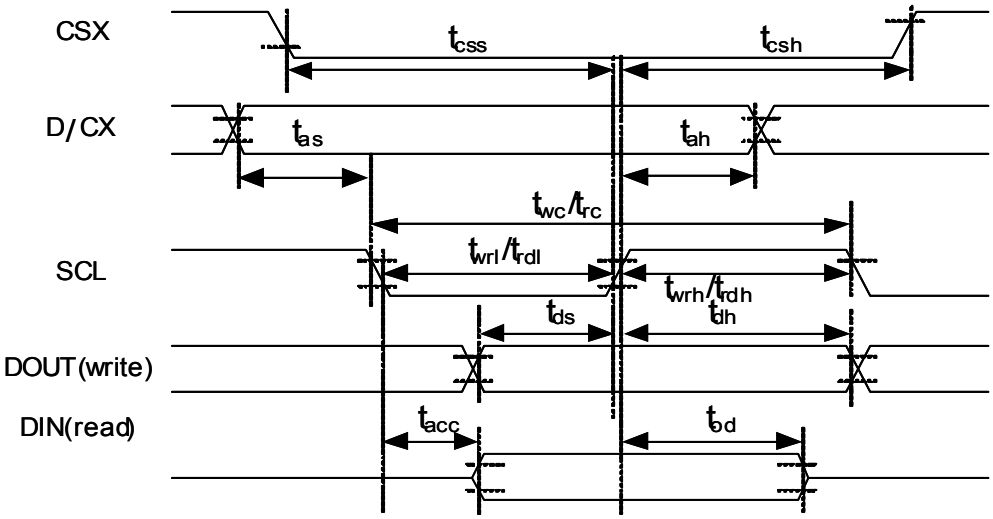

.Figure 5-6 Type C interface: Timing

.Table 5-1 AC characteristics T= 10ns

Signal	Symbol	Parameter	min	max	Unit	Description
CSX	tcss	Chip Select setup time (Write)	4xT	-	ns	
	tcsh	Chip Select setup time (Read)	4xT	-	ns	
D/CX (optional)	tas	Address setup time	T	-	ns	
	tah	Address holdtime(Write/Read)	T	-	ns	
SCL(write)	twc	Write cycle	10xT	-	ns	
	twrh	SCL H duration (write)	4xT	-	ns	
	twrl	SCL L duration (write)	4xT	-	ns	
SCL(read)	trc	Read cycle	15xT	-	ns	
	trdh	SCL H duration (read)	6xT	-	ns	
	trdl	SCL L duration (read)	6xT	-	ns	
DOUT(write)	tds	Data setup time	3xT	-	ns	For maximum C_L=30pF For minimum C_L=8pF
	tdh	Data hold time	3xT	-	ns	
DIN(read)	tacc	Access time	10		ns	
	tod	Output disable time	T	5xT	ns	

9-2. Power On/Off Sequence

9-2-1. Power On Sequence

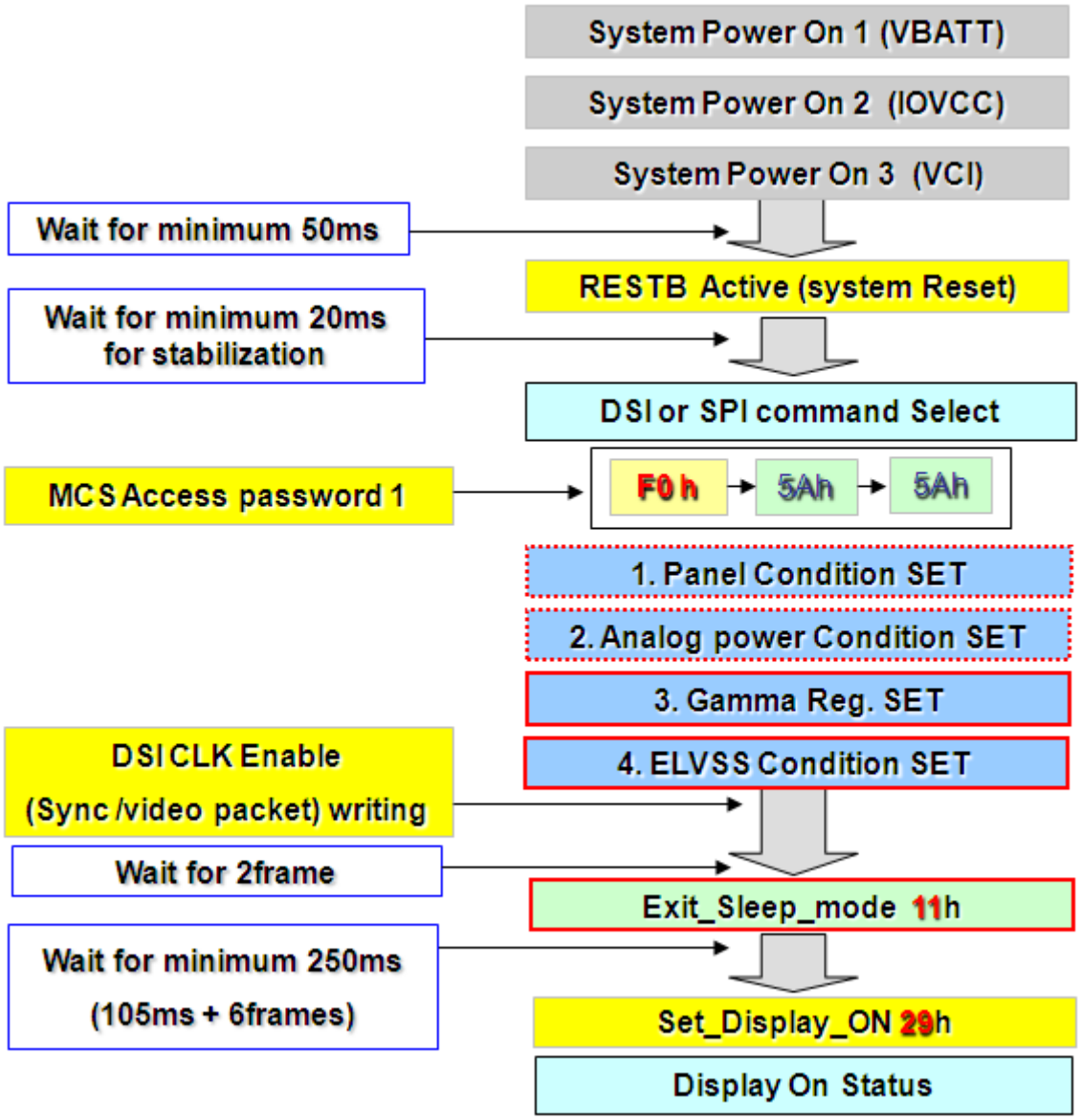

9-2-2. Power Off Sequence

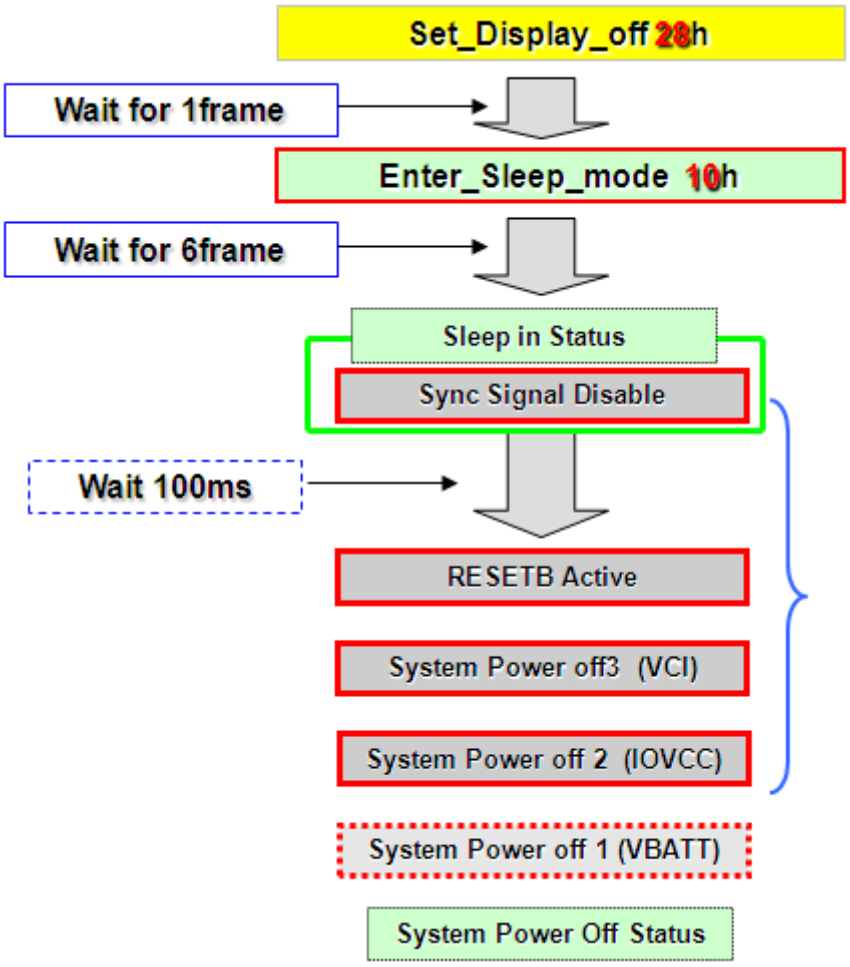

9-2-3 Power On Timing

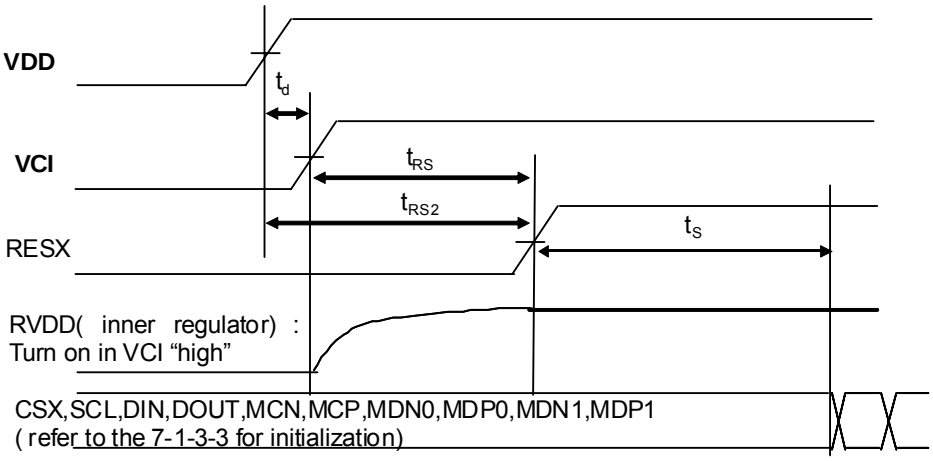

(VDD=1.65~3.4V ,VCI=2.5~3.6V Ta= -40~+85℃)

ITEM	SYMBOL	MIN	MAX	UNIT
Delay time	t_d	**non**	**non**	**ms**
RVDD Stable time	t_{RS}	**50**		**ms**
Stable time	t_{RS2}	**1**		**ms**
Stable time	t_S	**20**		**ms**

SAMSUNG Mobile Display CO., LTD.(All Rights Reserved).

9-3. Panel Condition Set

GTCON set	F7 h	20h				
Gateless signal	F8 h	7Fh	7Ah	89h	67h	26h
		38h	00h	00h	09h	67h
		70h	88h	7Ah	76h	05h
		09h	23h	23h	23h	00h

All of these parameters are default values, so user does not need to write them.

9-4. Analog Power Condition Set

Set Power Control 1	F4 h	33h	42h	00h	08h
Set Power Control 2	F5 h	00h	06h	26h	35h	03h

9-5. Set Gamma Register Set

Set Normal Gamma	F9 h	01h	9Fh	9Fh	BEh	CFh
		D7h	C9h	C2h	CBh	BBh
		E1h	E3h	DEh	D6h	D0h
		D3h	FAh	EDh	E6h	2Fh
		00h	2Fh			

These parameters should be written, because they are not default values.

SAMSUNG Mobile Display CO., LTD.(All Rights Reserved).

9-6. ELVSS Condition Set

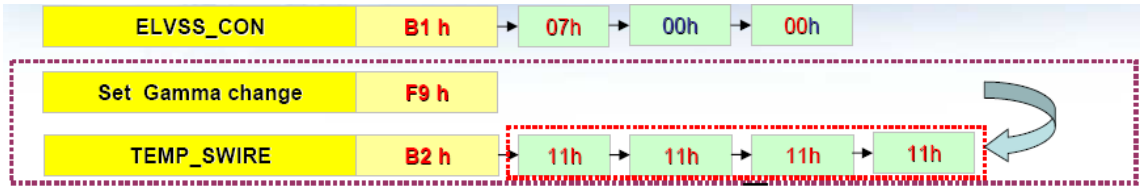

Note) To change ELVSS voltage, parameters of B2h should be written.
There 4 parameters used for the specified temperature as below.

Command

Inst/Para	Direction	D23-8	D7	D6	D5	D4	D3	D2	D1	D0	(Code)
TES	H → D	*	1	0	1	1	0	0	1	0	(B2h)
Parameter 1	H ↔ D	*	*	*	TEMP_SWIRE_01[4]	TEMP_SWIRE_01[4]	TEMP_SWIRE_01[3]	TEMP_SWIRE_01[2]	TEMP_SWIRE_01[1]	TEMP_SWIRE_01[0]	
Parameter 2	H ↔ D	*	*	*	TEMP_SWIRE_02[4]	TEMP_SWIRE_02[4]	TEMP_SWIRE_02[3]	TEMP_SWIRE_02[2]	TEMP_SWIRE_02[1]	TEMP_SWIRE_02[0]	
Parameter 3	H ↔ D	*	*	*	TEMP_SWIRE_03[4]	TEMP_SWIRE_03[4]	TEMP_SWIRE_03[3]	TEMP_SWIRE_03[2]	TEMP_SWIRE_03[1]	TEMP_SWIRE_03[0]	
Parameter 4	H ↔ D	*	*	*	TEMP_SWIRE_04[4]	TEMP_SWIRE_04[4]	TEMP_SWIRE_04[3]	TEMP_SWIRE_04[2]	TEMP_SWIRE_04[1]	TEMP_SWIRE_04[0]	
Default value	Power On	*	P1= 1Ch								
	H/W reset	*	P2= 1Bh								
	S/W reset	*	P3= 16h P4= 0Eh								

Description

TEMP_SWIRE_01 ~ 04 value means a number of swire pulse

TEMP_SWIRE = "1"

TEMP_SWIRE = "5"

Confidential

example)

TEMP_SWIRE_SET	T_{PANEL} (℃)	User ELVSS	TEMP_SWIRE[4:0]	Remark
01	$10 < T_{PANEL} \leq 30$	-3.7V	11110	UPDATE_CON='1' Default Value
02	$0 < T_{PANEL} \leq 10$	-3.7V	11101	
03	$-10 < T_{PANEL} \leq 0$	-3.7V	11000	
04	$-20 < T_{PANEL} \leq -10$	-3.7V	10000	

Note) For example, STOD03AS has ELVSS table as below.

Luminance (cd/m2)	139	129	119	108	103
Driving Voltage(V)	8.3	8.2	8.1	8.1	8.0
ELVSS(V)	−3.7	−3.6	−3.5	−3.5	−3.4
Pulse	18	19	20	20	21
Setting; B2h (P1~P4)	12h	13h	14h	14h	15h

If ELVSS voltages are chosen for -3.7V entire temperature range, the 4 parameters of B2h should be written by 12h, respectively.
The ELVSS value and setting values below 103cd/m² are same to 103cd/m².

9-6-1 Sequence and Read guide

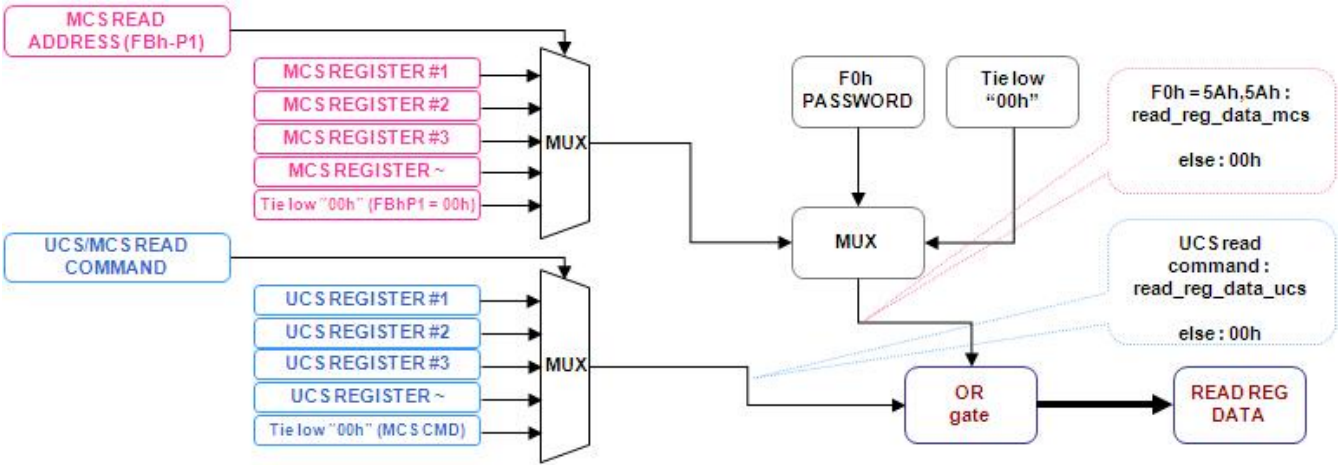

After writing or reading the MCS register, Password (F0h, F1h) setting value should be set "A5h A5h " for UCS register reading and overall stability.
And also UCS read data goes to "00h " when MCS read command(FCh) is detected.
So MCS read after reading UCS register has no problem.

If the password value is not able to change, MCS read address (FBh-P1) value must be set "00h " before UCS reading. "FBh-P1 = 00h" makes last MCS read data to "00h".
So UCS read data will not be blended with MCS read data by OR gate.

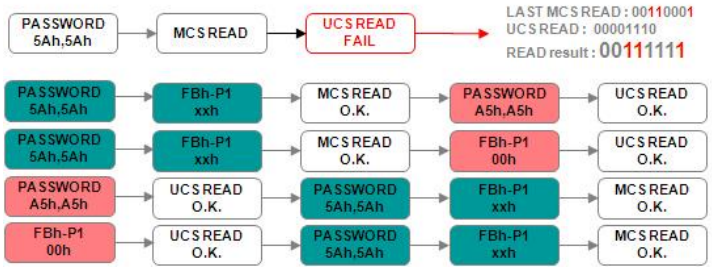

SAMSUNG Mobile Display CO., LTD.(All Rights Reserved).

9-7. Sleep-in / Sleep out Sequence

9-7-1. Sleep-in Sequence

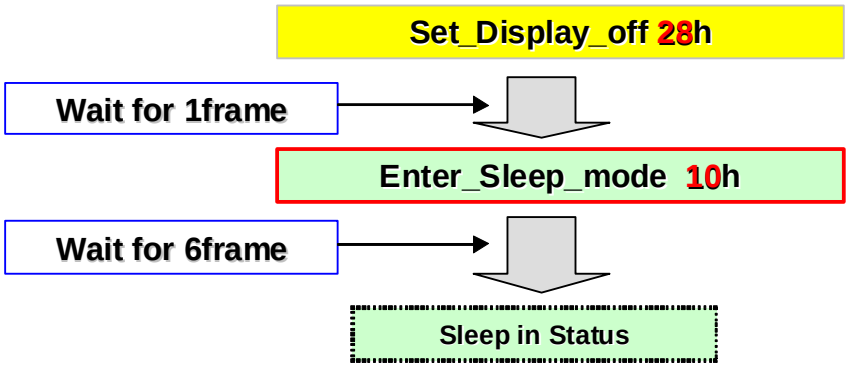

9-7-2. Sleep-out Sequence

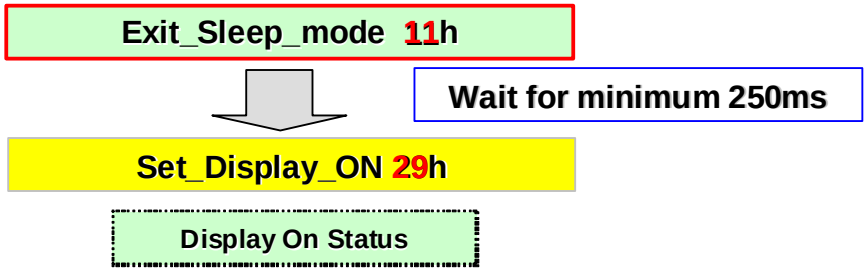

9-8. Gamma Condition Setting Value per Each brightness

◎ Gamma Table (Gamma γ = 2.2)

Parameter	Parameter(cd/m²)																Description
	139	129	119	108	103	97	92	87	82	76	71	66	60	55	50	44	
P1	01h																Gamma set update disable
P2	9F	9C	99	95	93	91	8F	8D	8B	89	87	84	82	7F	7D	79	Red V255
P3	9F	9C	99	95	93	91	8F	8D	8B	89	86	83	81	7E	7C	78	Green V255
P4	BE	BA	B6	B1	AF	AC	AA	A7	A5	A2	9F	9B	99	95	92	8D	Blue V255
P5	CF	D0	D1	D2	D3	D3	D4	D5	D5	D5	D6	D7	D6	D7	D7	D9	Red V171
P6	D7	D8	D9	D9	DA	DA	DB	DB	DB	DB	DD	DE	DD	DE	DD	DF	Green V171
P7	C9	CB	CC	CC	CD	CE	CE	CF	CF	CF	D1	D2	D1	D2	D2	D5	Blue V171
P8	C2	C3	C3	C4	C5	C5	C6	C6	C7	C8	C7	C8	CA	CB	CB	CB	Red V87
P9	CB	CB	CB	CD	CD	CD	CD	CE	CE	CF	CE	CE	CF	CF	D0	CF	Green V87
P10	BB	BB	BC	BE	BE	BE	BF	C0	C0	C2	C1	C2	C3	C5	C6	C5	Blue V87
P11	E1	E2	E2	E2	E2	E3	E3	E4	E3	E3	E4	E4	E4	E5	E5	E5	Red V59
P12	E3	E4	E4	E3	E3	E3	E3	E4	E3	E3	E3	E3	E3	E3	E1	E0	Green V59
P13	DE	DF	DF	DF	DF	E0	E1	E1	E1	E1	E2	E2	E3	E3	E3	E4	Blue V59
P14	D6	D6	D6	D7	D6	D7	D7	D7	D8	D9	D9	D9	DA	DA	DA	DC	Red V35
P15	D0	CE	CC	CC	CA	CA	CA	C8	C7	C7	C6	C3	C2	BF	BD	B8	Green V35
P16	D3	D3	D3	D3	D3	D3	D3	D3	D3	D3	D3	D3	D3	D3	D3	D4	Blue V35
P17	FA	FA	FA	FA	FA	FA	FA	FA	FA	FA	FA	FA	FA	FA	FA	FA	Red V15
P18	ED	ED	ED	ED	ED	ED	ED	ED	ED	ED	ED	ED	ED	ED	ED	ED	Green V15
P19	E6	E6	E6	E6	E6	E6	E6	E6	E6	E6	E6	E6	E6	E6	E6	E6	Blue V15
P20	2F	2F	2F	2F	2F	2F	2F	2F	2F	2F	2F	2F	2F	2F	2F	2F	Red V1
P21	0	0	0	0	0	0	0	0	0	0	0	0	0	0	0	0	Green V1
P22	2F	2F	2F	2F	2F	2F	2F	2F	2F	2F	2F	2F	2F	2F	2F	2F	Blue V1
P1	00h																Gamma set update Enable

Note) Gamma Table is for AMS495QA04(MP)

10. Quality Level

10-1. Environment Condition

The environmental conditions for inspection shall be as follows.

① Temperature & Humidity

Room temperature : 22 ± 3℃

Humidity : 65 ± 20%RH

② Viewing distance : 30 ± 5cm

Viewing angle(tolerance) : 90° ± 30°

③ Ambient light

Display visual inspection : 150±50 lux

Cosmetic inspection : 1000~1500 lux

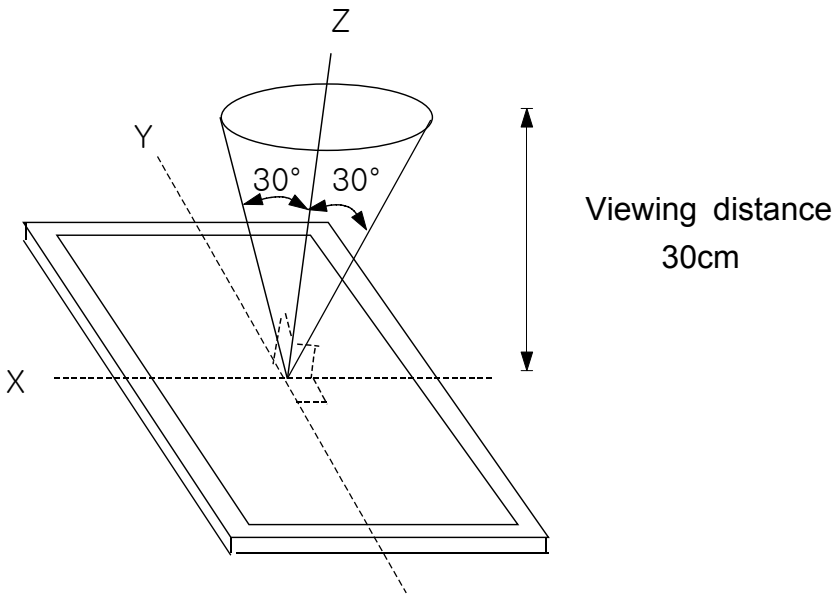

10-2. Sampling Procedures for each item's acceptance table

Defect type	Sampling Procedures	AQL
Major Defect	MIL-STD-105D Inspection level Ⅰ normal inspection single sample inspection	0.65
Minor Defect	MIL-STD-105D Inspection level Ⅰ normal inspection single sample inspection	1.5

① Major defect
: A major defect refers to a defect which may substantially degrade usability for product applications.

② Minor defect
: A minor defects refers to a defect which is not considered to substantially degrade product application,or a defect which deviates from existing standards almost unrelated to the effective use of the product or its operation.

③ Display visual defect application zone : Viewing Area

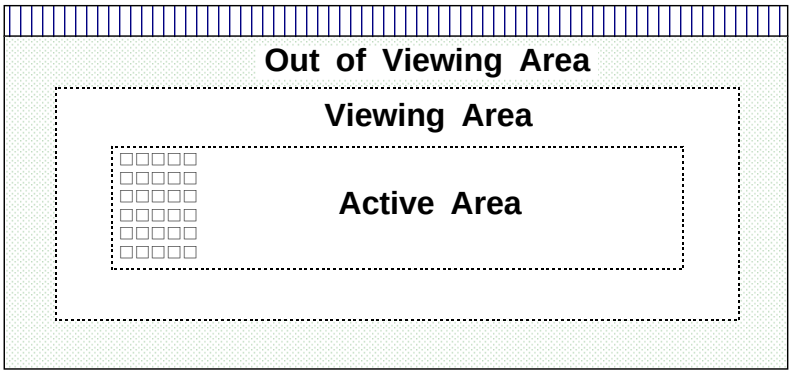

- Display visual defect in "Out of View Area" Zone should not be judged.

10-3. Inspection Item

■ Cosmetic defect

※ If other issue happen, that sample is holding and renegotiation SMD & SCE

※ Function test judgement pattern : White, Red, Green, Blue, Black, 180gray

- Mosaic & Cross Talk & RGB gradation pattern are not judgement pattern, but in case of conditions seen only in these pattern, SMD on-site reconfirm. In case of need rediscussion

※ From Polarizer edge to 1mm area should not be judged.
(Edge to 1mm inside foreign Material is re-examination in Foxconn)

<table>
<tr><th>No.</th><th>Item</th><th>Criterion for Defects</th><th>Defect Type</th></tr>
<tr><td>1</td><td>Non Display</td><td>Disallowance</td><td>Major</td></tr>
<tr><td>2</td><td>Irregular operating</td><td>Disallowance</td><td>Major</td></tr>
<tr><td>3</td><td>Line defect</td><td>Disallowance (Vertical line/ Horizontal line / Periodical line)
Inspection pattern is R,G,B,White,Black</td><td>Major</td></tr>
<tr><td>4</td><td>Dot</td><td><table><tr><th>Distance(mm)</th><th colspan="2">Acceptable number</th></tr><tr><td rowspan="2">30 ≤ D</td><td>Dark</td><td>Bright</td></tr><tr><td>2</td><td>0</td></tr><tr><td colspan="3">※ Criterion : 1 sub Pixel(38x114um)
Dark dots shall be counted on a pure R,G,B pattern
Bright dots shall be counted on a pure R,G,B,Black</td></tr></table></td><td>Minor</td></tr>
<tr><td>5</td><td>Polarizer foreign Material / dent / Bubble

Ø=(L+W)/2</td><td><table><tr><th colspan="2">Size</th><th>Acceptable number</th></tr><tr><td>Ø ≤ 0.15</td><td>(SMD gage)</td><td>Ignore</td></tr><tr><td>㎟ < 0.05</td><td>(Sony gage)</td><td>2</td></tr><tr><td colspan="3">Distance(mm) : 30 ≤ D</td></tr></table>※ In the case of below 0.15, it is more than 3ea within 5mm → NG judgment</td><td>Minor</td></tr>
<tr><td>6</td><td>Scratch on Polarizer (Line shape)
 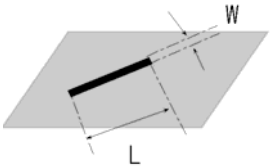
</td><td><table><tr><th>Width (㎜)</th><th>Length (㎜)</th><th>Acceptable number</th></tr><tr><td>W≤0.03</td><td>Ignore</td><td>Ignore</td></tr><tr><td rowspan="3">0.03 < W≤0.05</td><td>L≤2.0</td><td>Ignore</td></tr><tr><td>2.0< L≤10.0</td><td>2</td></tr><tr><td>10<L</td><td>0</td></tr></table></td><td>Minor</td></tr>
<tr><td>7</td><td>FPC Dent</td><td>Inspection by confirmed limit sample</td><td>Minor</td></tr>
</table>

<table>
<tr><th>No.</th><th>Item</th><th>Criterion for Defects</th><th>Defect Type</th></tr>
<tr><td>8</td><td>FPC Scratch
(Copper & C/L)</td><td>
<table>
<tr><th>Width (㎜)</th><th>Length (㎜)</th><th>Acceptable number</th></tr>
<tr><td>W≤0.05</td><td>Ignore</td><td>Ignore</td></tr>
<tr><td>0.05 < W≤0.1</td><td>20<L</td><td>1</td></tr>
</table>
Disallowed if Cu layer exposed
In case of judgment is difficult by above standard, it is needed renegotiation</td><td>Minor</td></tr>
<tr><td>9</td><td>FPC Stain</td><td>- Black shield peel off is NG
(Silver、Coverlay、Gold plate)
→ Ignore : Width, Length, number
- That is no problem performance</td><td>Minor</td></tr>
<tr><td>10</td><td>Surface Stain</td><td>Sticking stain is NG</td><td>Minor</td></tr>
<tr><td>11</td><td>Protection film tilt</td><td>Polarizer edge to 1mm over tilt is NG</td><td>Minor</td></tr>
<tr><td>12</td><td>FPC inside foreign Material (Spot)</td><td>
<table>
<tr><th>Size</th><th>Acceptable number (Spot + line total)</th></tr>
<tr><td>Ø ≤ 0.2mm</td><td>Ignore</td></tr>
<tr><td>Ø ≤ 0.5 (0.2㎟)</td><td>2</td></tr>
</table>
</td><td>Minor</td></tr>
<tr><td>13</td><td>FPC inside foreign Material (Line)</td><td>
<table>
<tr><th>Width (㎜)</th><th>Length (㎜)</th><th>Acceptable number (Spot + line total)</th></tr>
<tr><td>Ignore</td><td>L ≤ 2</td><td>Ignore</td></tr>
<tr><td>W≤0.05</td><td>5</td><td>2</td></tr>
</table>
</td><td>Minor</td></tr>
<tr><td>14</td><td>FPC surface foreign Material</td><td>
<table>
<tr><th>Size</th><th>Acceptable number (Spot + line total)</th></tr>
<tr><td>Ø ≤ 0.2mm</td><td>Ignore</td></tr>
<tr><td>Ø ≤ 0.5 (0.2㎟)</td><td>2</td></tr>
</table>
※ There is no problem clean by using soft cloth</td><td>Minor</td></tr>
<tr><td>15</td><td>MIPI Line foreign Material</td><td>Disallowance</td><td>Minor</td></tr>
<tr><td>16</td><td>Conductive Particle on FPC&Connector</td><td>Disallowance</td><td>Minor</td></tr>
<tr><td>17</td><td>FPC Stain</td><td>Pattern parts
(It is include gold plating part of FOG bonding parts and GND)
- Stain, discoloration by difference of gloss and brightness : OK
- Color difference of plating and stain (wave shape) : OK
- Finger print is NG
- Oxidation is NG</td><td>Minor</td></tr>
</table>

SAMSUNG Mobile Display CO., LTD.(All Rights Reserved).

<table>
<tr><td>18</td><td>FPC
Cushion tape</td><td>
<table>
<tr><th>Item</th><th>Position</th><th>Size(㎟)</th><th>Acceptable number</th></tr>
<tr><td>Torn out</td><td>Stiffner</td><td>1.0</td><td>1</td></tr>
<tr><td>//</td><td>Others</td><td>0.5</td><td>1</td></tr>
<tr><td>Dent</td><td colspan="3">Ignore</td></tr>
<tr><td>Pressed</td><td colspan="3">Ignore</td></tr>
</table>
</td><td>Minor</td></tr>
<tr><td>19</td><td>FPC
edge folding</td><td>Folding height ≤ 45°</td><td>Minor</td></tr>
<tr><td>20</td><td>FPC folding</td><td>GND area : Crack is not allowed. other shape is OK
Line area : Perfectly folding is not allowed (Line shape)</td><td>Minor</td></tr>
<tr><td>21</td><td>AL Tape
bubble,wrinkle</td><td>Height ≤ PC Sheet</td><td>Minor</td></tr>
<tr><td>22</td><td>AL Tape Scratch</td><td>Ignore. peel off is NG</td><td>Minor</td></tr>
<tr><td>23</td><td>Bezel Mold Burr</td><td>Including Burr is within specification size (0.15mm)</td><td>Minor</td></tr>
<tr><td>24</td><td>Tuffy on
Drive IC</td><td>
<table>
<tr><th>item</th><th>Width(㎜)</th><th>Length(㎜)</th><th>Height(㎜)</th><th>Acceptable number</th></tr>
<tr><td>Line</td><td>W ≤ 1</td><td>L ≤ 25</td><td>H ≤ encap</td><td>Ignore</td></tr>
<tr><td>Spot</td><td>W ≤ 1</td><td>L ≤ 3</td><td>H ≤ encap</td><td>2</td></tr>
</table>
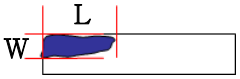

</td><td>Minor</td></tr>
<tr><td>25</td><td>Tuffy on
back side</td><td>Application height ≤ FPCB Round Center</td><td>Minor</td></tr>
<tr><td>26</td><td>Reinforcing
material & Tuffy</td><td>Application height ≤ Polarizer</td><td>Minor</td></tr>
<tr><td>27</td><td>PC Sheet</td><td>
<table>
<tr><th>Item</th><th>Distance</th><th>Size(mm)</th><th>Acceptable number</th></tr>
<tr><td>Foreign material</td><td>30mm ≤ D</td><td>0.5</td><td>2</td></tr>
<tr><td>Scratch</td><td colspan="3">Ignore</td></tr>
</table>
※ Foreign material : within specification size
</td><td>Minor</td></tr>
<tr><td>28</td><td>PC Sheet
Broken</td><td>Temporary Disallowance</td><td>Minor</td></tr>
<tr><td>29</td><td>PC Sheet
bubble</td><td>
<table>
<tr><th>Size</th><th>Acceptable number</th></tr>
<tr><td>Ø ≤ 4.0mm</td><td>Ignore</td></tr>
</table>
</td><td>Minor</td></tr>
<tr><td>30</td><td>Shield Can</td><td>- Scratch : Ignore
- Foreign material : within specification size</td><td></td></tr>
</table>

31	Glass chipping	Coner	Side	(Note 1) Minor
		X≤2.0: OK Y≤2.0: OK Z≤Glass T: OK	X≤5.0: OK Y≤0.5: OK Z≤Glass T: OK	
32	Progressive Crack	Disallowance		
33	ELA Mura (H-line)	Inspection by confirmed limit sample / 255gray		Minor
34	ELA Mura (V-line)	Inspection by confirmed limit sample / 127gray		Minor
35	Dark spot mura	Inspection by confirmed limit sample / 127gray		Minor
36	White spot mura	Inspection by confirmed limit sample / 127gray		Minor
37	Tire mura	Inspection by confirmed limit sample / 180gray		Minor
38	WAD	Inspection by confirmed limit sample / Full white Viewing angle(tolerance) :± 30°		Minor
39	Mask Mura	Temporary Disallowance After check the limit sample, and renegotiation		Minor
40	Mask dent	Inspection by confirmed limit sample More severe level is on-site reconfirm after renegotiation		Minor

Note1)

[Corner]

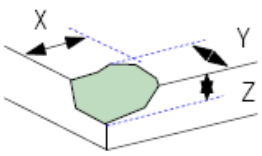

[Side]

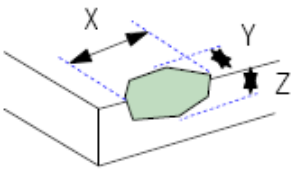

[Progressive Crack]

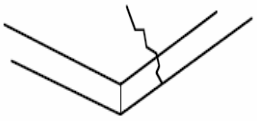

[Quality control area]

Over view	item	Criterion for Defects	Defect Type
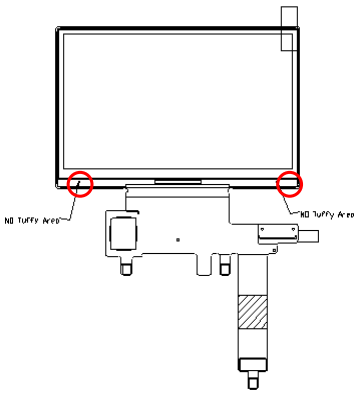	Left align key	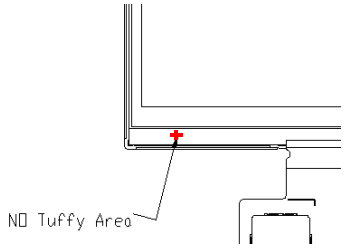	No "tuffy" on align key for Lamination.
	Right align key	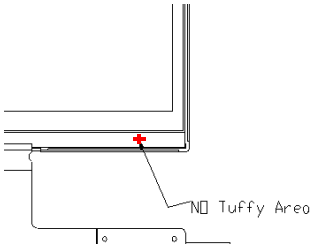	

11. Reliability

11-1. Test item

◎ **All test result of items should be judged in 2 hours recovery time at room temperature.**
◎ **Without Touch+Window ass'y. For AMOLED module.**

No	Item	Condition	Qty.	Judgment Criterion
1	High Temperature Operation	70℃ 240hours	6	- After testing, Cosmetic defects should not happen. - After testing, the defective of brightness should be less than 40% of the initial value. - After testing, total current consumption should be in the range of initial Spec. - After testing, color coordinate value should be in the range of initial Spec.
2	High Temperature Storage	70℃ 240hours	6	
3	Low Temperature Operation	-10℃ 240hours	6	
4	Low Temperature Storage	-30℃ 240hours	6	
5	High Humidity Operation	40℃ 95%RH 240hours	6	
6	High Humidity Storage	60℃ 90%RH 240hours	6	
7	Temperature Cycle	-30/80℃ 30 minute 50Cycle	6	
8	ESD (Contact)	± 6㎸, 150pF/330Ω, Center, 2 times (Non-operation)	3	-In case of malfunction defect caused by ESD damage,if it would be recovered to normal state after resetting, it would be judged as a good part.
9	ESD (Air)	± 8㎸, 150pF/330Ω, Center, 2 times (Non-operation)	3	
10	Vibration Test (Packing)	Random, 1.047Grms, 6~200Hz Z:60min, X,Y each 30min	32	- After testing,cosmetic and electrical defects should not happen

SAMSUNG Mobile Display CO., LTD.(All Rights Reserved).

12. Handling Precautions

12-1. Mounting Method

The AMOLED+TSP+Window of SAMSUNG Mobile Display CO.,LTD. module consists of two slim glasses with polarizer which can easily get damaged. Since the module is constructed as to be fixed by utilizing fitting holes in the printed circuit board. Extreme care should be used when handling the AMOLED modules.

12-2. Caution of AMOLED Handling and Cleaning

When cleaning the display surface, use soft cloth solvent as recommended below and wipe gently.

◎ Isopropyl alcohol
◎ Ethyl alcohol
◎ Trichlorotriflorothane

Do not wipe the display surface with dry or hard materials that will damage the polarizer surface. Do not use the following solvent.

◎ Water
◎ Ketone
◎ Aromatics

Do not wipe ITO pad area with the dry or hard materials that will damage the ITO patterns. Do not use the following solvent on the pad and prevent it from being contaminated.

◎ HCFC
◎ Soldering flux
◎ Chlorine(Cl), Sulfur(S)
◎ Spittle, Fingerprint

If the product is not wrapped with a desiccant added pad, ITO pattern can be damaged by corrosion. SAMSUNG Mobile Display CO,.LTD. suggests wrapping a product with a desiccant unless customers particularly indicate that they do not want it. In case ITO pattern corrodes due to the usage of chlorine, sulfur or customer's mishandling of the product, the responsibility lies with the customer.

12-3. Caution Against Static Charge

For AMOLED module, use C-MOS LSI drivers, therefore we recommend that you ;
Connect any unused input terminal to VDD or VSS, do not input any signals before power is turned on, and ground your body, work/assembly areas, assembly equipment to protect against static electricity. It could occur static electricity when taping off the film which protects AMOLED.
Against static charge, you should make sure that the product is safe or not by experiment in advance.

SAMSUNG Mobile Display CO., LTD.(All Rights Reserved).

12-4. Packing

◎ The packing principle is that AMOLED module should keep its packing condition at the time of delivery. When storing the AMOLED after unpacking, note the followings.

◎ AMOLED module is consisted of GLASS and assemblies. It should avoid pressure, strong impact, and being dropped from a height.

◎ To prevent modules from degradation, do not operate or store them in a place where they are directly exposed to sunlight or high temperature/humidity.

12-5. Caution for Operation

◎ If you do not follow normal POWER ON , OFF sequence or abnormal operating, then AMOLED module can be damaged Electro-optically and does not recover.

◎ Response time may extremely delay at a temperature lower than operating range, AMOLED does not normally operate at a high temperature. But this may recover at a proper temperature.

◎ When you set optimal operating voltage to AMOLED module, you can see the optimal contrast of AMOLED. So, add voltage controllable function at SET Module.

◎ AMOLED module may not display normally when twisting power or pressing power is added. Therefore you should secure AMOLED module maximum thickness at set assembly not to have any pressure affect AMOLED module.

◎ Electro-chemical reaction may occur when there is humidity on pad, therefore, you should use AMOLED Module below maximum operating humidity.

◎ AMOLED Module Power Vdd should be designed to protect surge current at SET Module.

◎ You should not damage connector and cable for AMOLED module assembly by force folding or by applying extreme power.

◎ AMOLED may not display normally when it is interfered by surrounding elements, therefore you should consider setting design not to damage AMOLED module by surrounding elements.

◎ To satisfy EMI standards, you should plan your design after considering emitting energy.

◎ We can not guarantee display characteristics outside viewing area, therefore your set window should be fixed into viewing area.

◎ Image-sticking may occur if AMOLED displays same image for a long time, so you need to make a pattern change for AMOLED.

12-6. Storage

◎ Place in a dark place where neither exposure to direct sunlight or any fluorescent light is permitted and keep at room temperature & room humidity.

◎ Store with no contact with polarizer surface.

[It is recommended to store them as they have been contained in the inner container when we delivered them.

12-7. Safety Precautions

◎ Disassembly or modification may cause electric shock, damages to sensitive part inside of the AMOLED module, dust adhesion, or scratches on the display part.

◎ In the event that the contents of AMOLED module are on skin, wipe them with a paper towel or gauge and wash the part well, and receive medical attention if necessary.

◎ Do not use the AMOLED module for the Special purpose besides display units.

◎ Be careful of the glass chips that may cause injury to fingers of skin, when the display part is broken.

12-8. Precautions before Use

You should discuss the following case with SAMSUNG Mobile Dsiplay CO.,LTD.

◎ in case of any questions about contents of this "Specification For Approval".

◎ in case of occurring new problems not mentioned at this "Specification For Approval".

◎ in case of your request about income inspection Specification change.

◎ in case of occurring new problem at your driving test.

※ If SMD has to change the conditions specified in the specification, previously the negotiation shall be held and decided.

SAMSUNG Mobile Display CO., LTD.(All Rights Reserved).

13. Drawing

13-1. Product Drawing

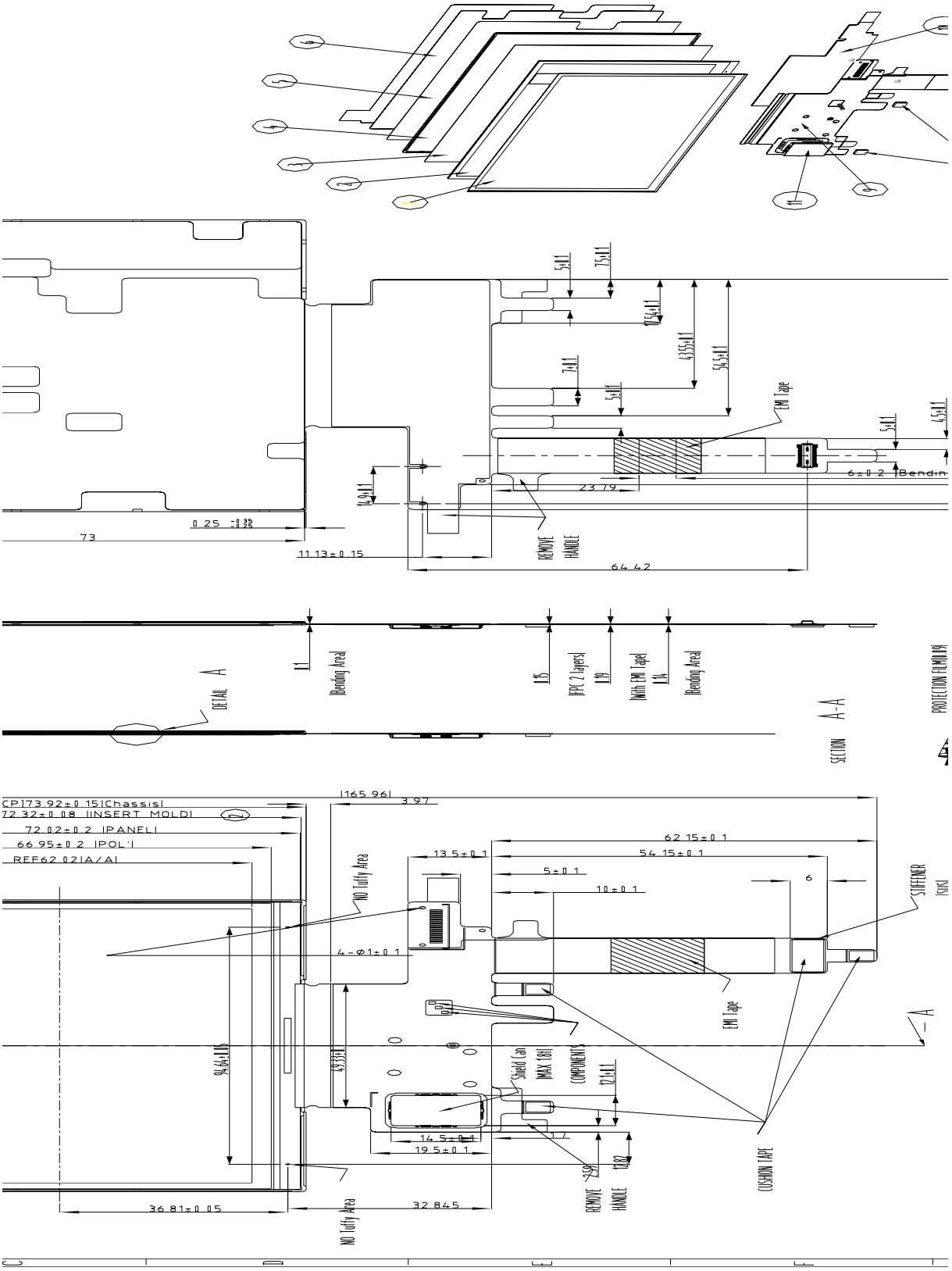

13-2. Packing Drawing

13-2-1 Box Pack

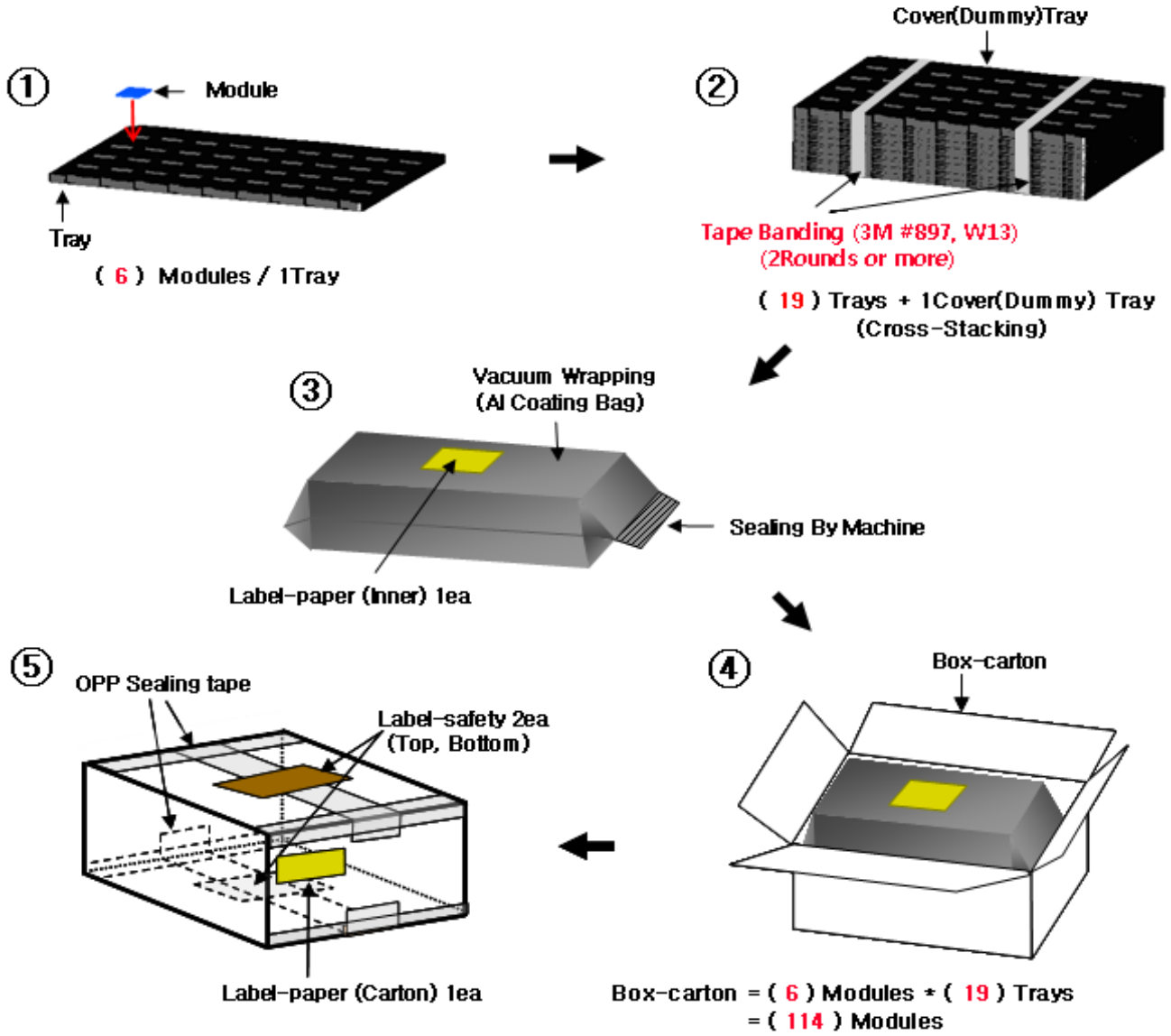

Note

(1) Total :Box-carton approx. : (10.38)kg

(2) Size : 583(L) x 388(W) x 210(H)

(3) Place the OLED Module in the tray facing the active area direction.

(4) Stack the trays and cover (dummy) tray.

(5) Resistance of tray surface : 10^6~10^9 Ω

(6) Wrap the Al coating bag by vacuum sealing machine.

(7) Put the bag in the Box-carton .

(8) Seal the Box-carton and affix the Label-safety & Label-paper.

SAMSUNG Mobile Display CO., LTD.(All Rights Reserved).

13-2-2 Label

* Label-paper (Inner)

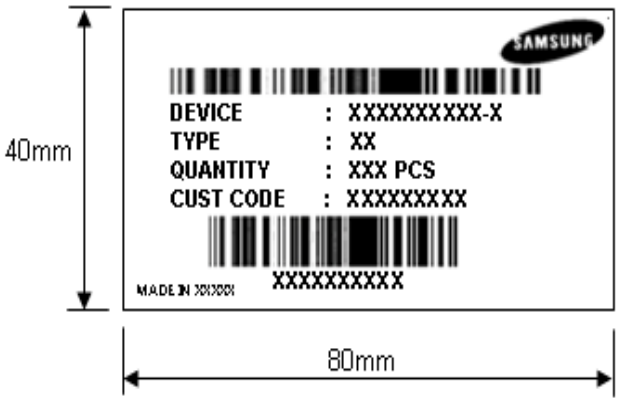

* Label-paper (Carton)

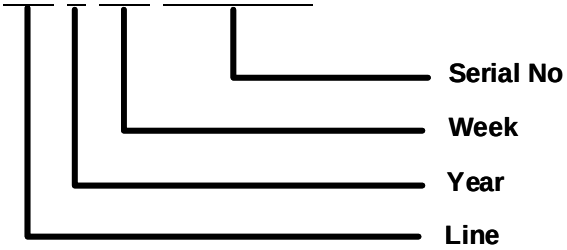

* Label-safety

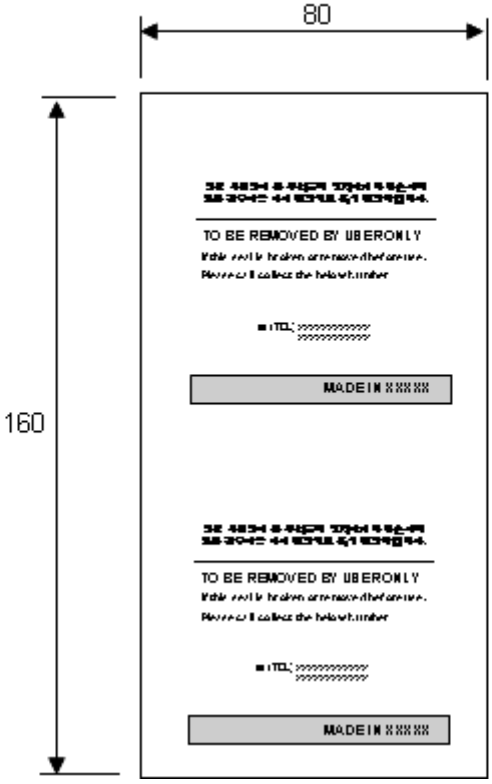

13-2-3 Packing for small quantities

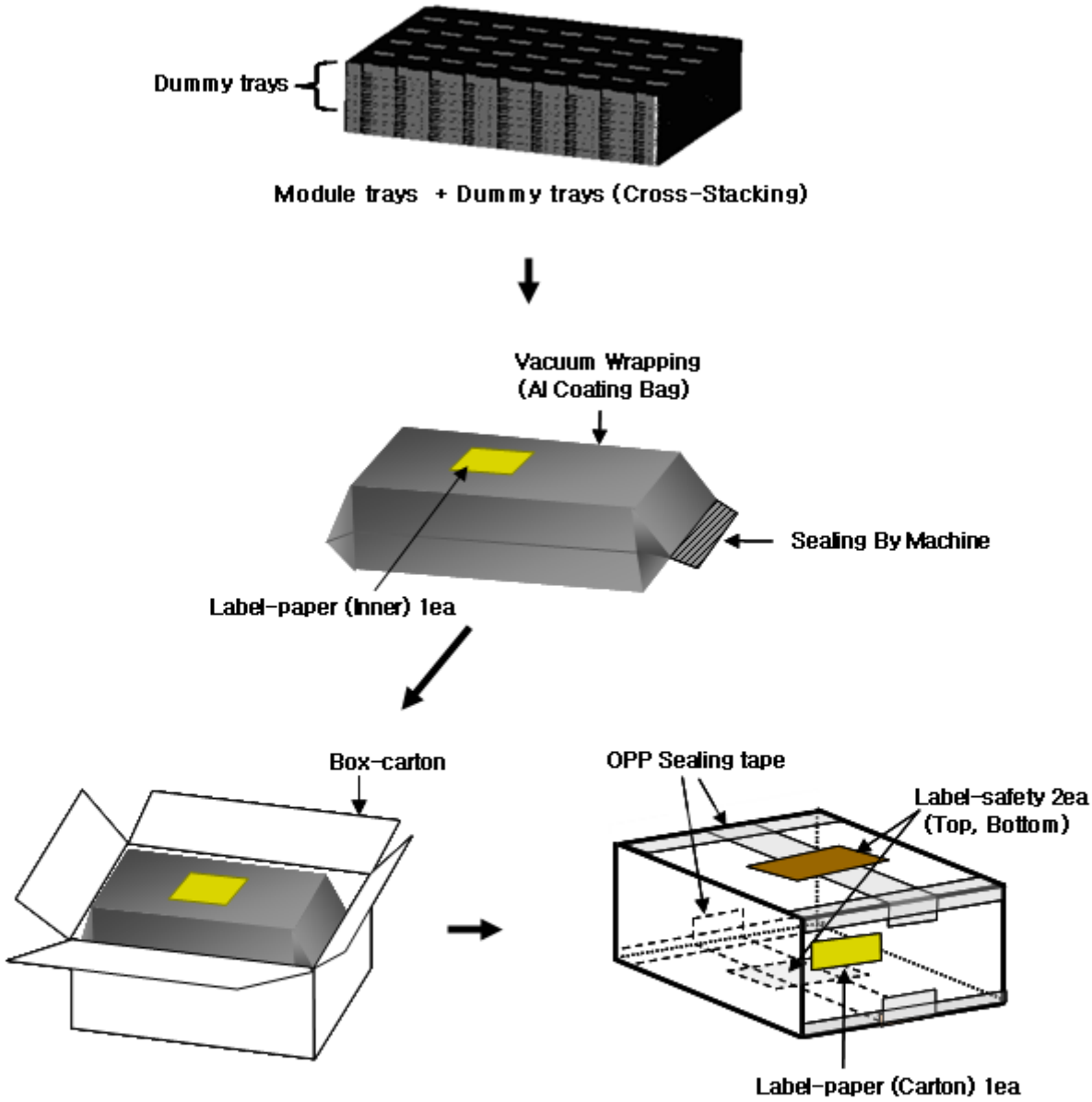

Note

When package quantity is small, OLED Modules containing trays are stacked the bottom, and dummy trays are stacked at the top of package, then wrap the Al coating bag by vacuum sealing machine

13-2-4 Over pack

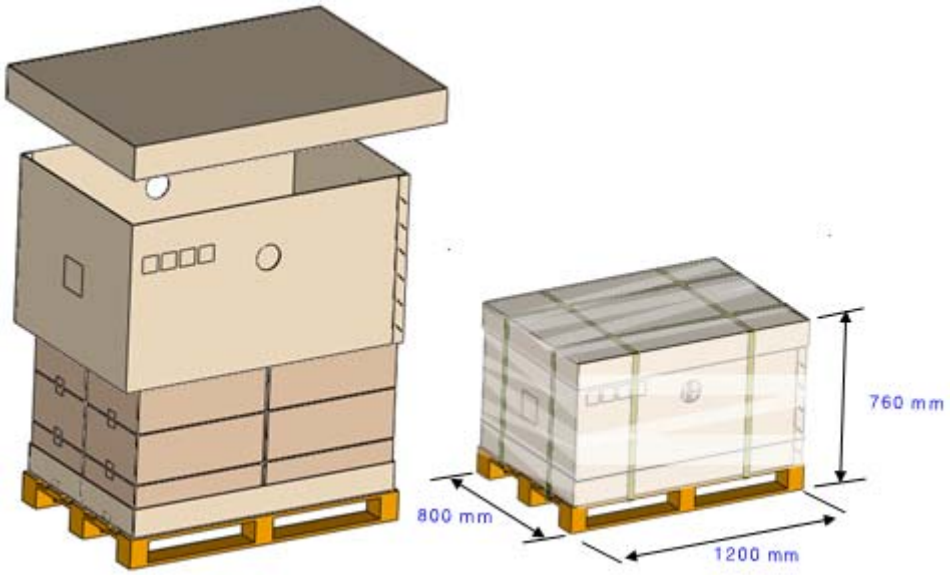

13-2-5 Packing for small quantities

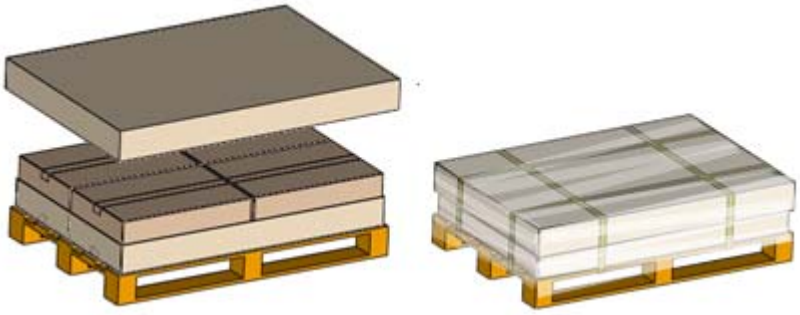

SAMSUNG Mobile Display CO., LTD.(All Rights Reserved).

13-2-6 Over pack attach

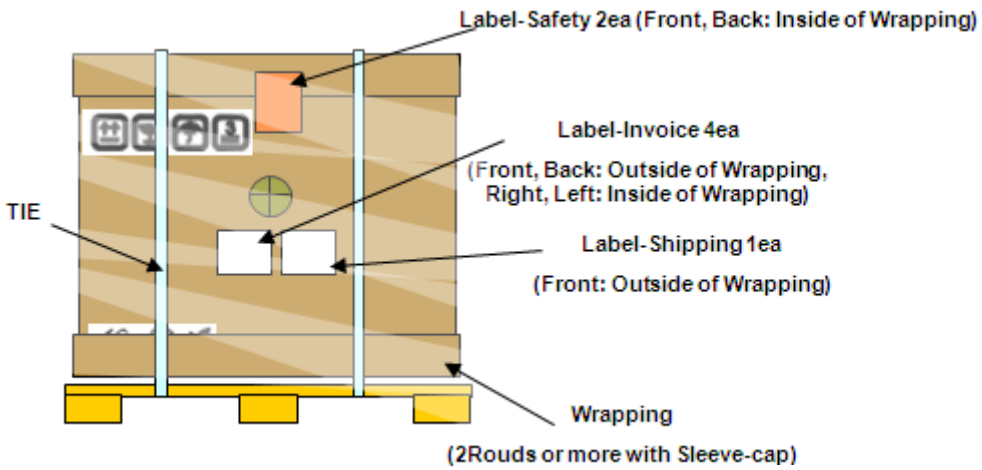

* Label-invoice

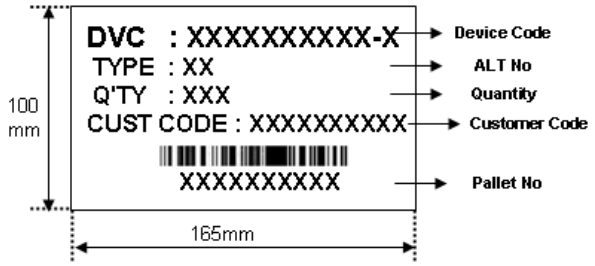

* Label-shipping

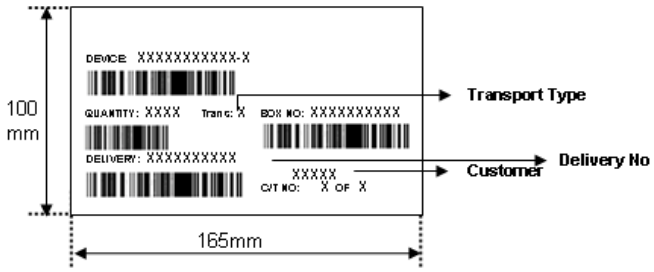

* Reference Image (Except Label and Wrap)

Carton Box		
Sleeve Box		

SAMSUNG Mobile Display CO., LTD.(All Rights Reserved).

13-2-7. Module Marking Rule

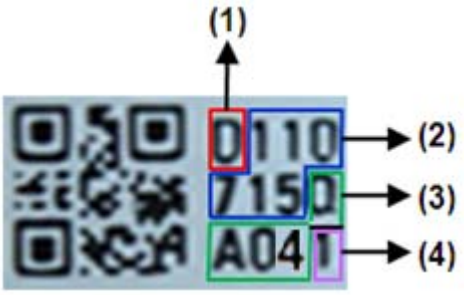

(1)Module site : ex) D(DONGGUAN)
(2)Date : ex) 110715 (2011/ 07/ 15)
(3)Product code : QA04
(4)FPCB Maker : ex) 1 → SIFlex/ 2 → InterFlex

<Position>

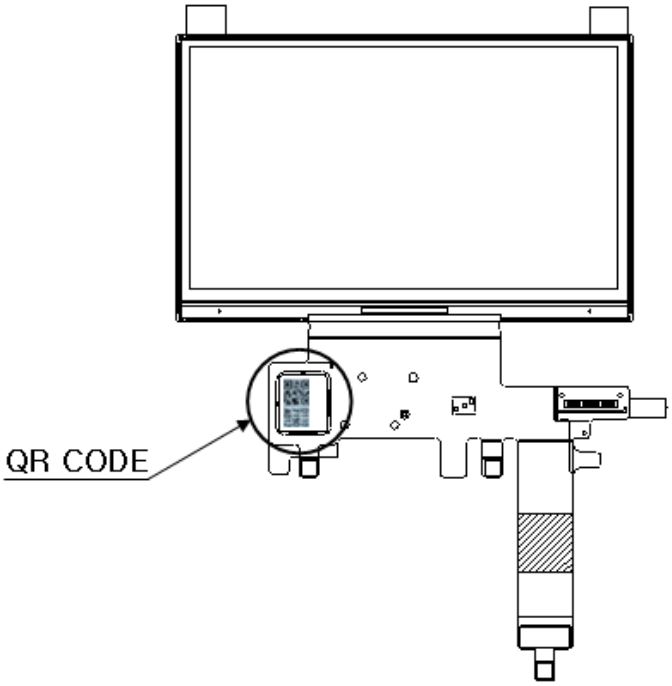
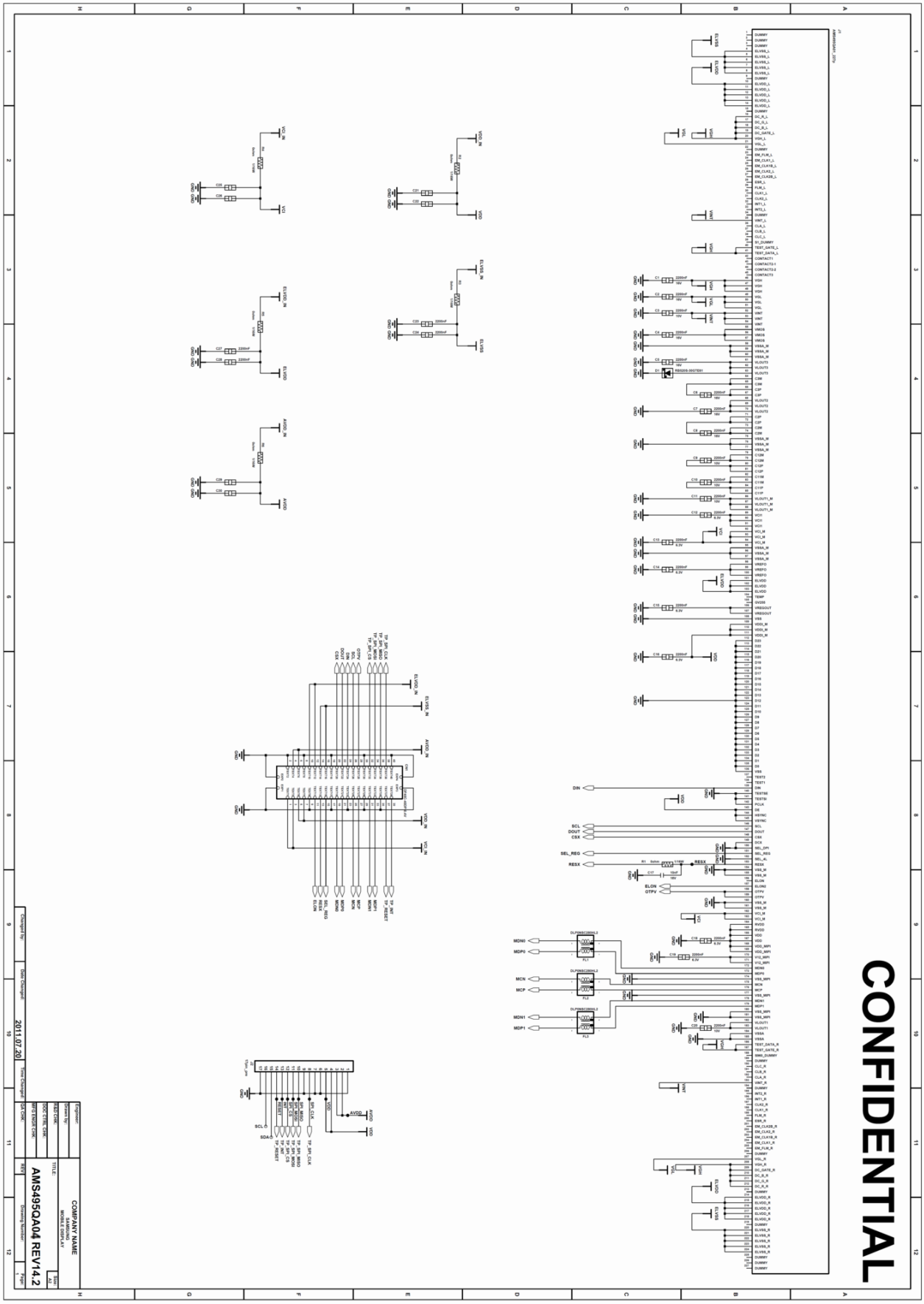
14. Schematic