SAMSUNG

SAMSUNG DISPLAY

LEAD-FREE

Product Specification

(√) Preliminary Specification
( ) Approval Specification

The information described in this SPEC is preliminary and can be changed without prior notice.

DATE OF ISSUE	2014.08.05

MODEL NO.	LSL101DL01
EXTENSION CODE	-0

Customer Approval & Feedback

Approved by	
Prepared by	Clare Jang 14/08/05
Customer Support Engineering Group Samsung Display Co., Ltd	

Table of Contents

REVISION HISTORY

Date.	Rev.No.	Page	Revision Description
14-08-05	P00	All	Initial Release (Ref. TPD01945-001 SDC Spec)

1. GENERAL DESCRIPTION

DESCRIPTION

The panel is a color active matrix TFT (Thin Film Transistor) liquid crystal display (LCD) that uses amorphous silicon TFT as switching devices. This model is composed of a TFT LCD panel, a driver circuit, and a back light unit. The resolution of a 10.1" contains 2560X1600 and can display up to 16,777,216 colors.

FEATURES

WQXGA 2560X1600 pixels resolution
DE (Data enable) only mode
3.3V Operating Voltage
RoHS Compliance
eDP(V1.3) Input interface

APPLICATIONS

Tablet PC
If the intent to use this product is for other purpose, please contact Samsung Display.

GENERAL INFORMATION

Item	Specification	Unit	Note
Display area	216.6(H) X 135.4(V) (10.1"diagonal)	mm	
Driver element	a-Si TFT active matrix	-	
Display colors	16,777,216	colors	
Number of pixel	2560 * 1600	pixel	
Pixel arrangement	RGBW		
Pixel pitch	0.0423(H) x 0.0846 (V) (TYP.)	mm	
Display Mode	Normally Black		
Surface treatment	Glare		

MECHANICAL INFORMATION

Item		Min.	Typ.	Max.	Unit	Note
Panel Size	Horizontal (H)	223.426	223.576	223.726	mm	
	Vertical (V)	143.56	143.71	143.86	mm	
	Depth (D)	-	-	0.68	mm	(1)
Weight		-	-	55	g	

NOTE (1) Thickness Measuring Method
Equipment : height gauge (With 150gf)
vernier calipers (With 300gf)

2. ABSOLUTE MAXIMUM RATINGS

2.1 ENVIRONMENTAL ABSOLTE RATINGS

Item	Symbol	Min.	Max.	Unit	Note
Storage temperate	TSTG	-20	60	°C	(1)
Operating temperature (Temperature of glass surface)	TOPR	-20	50	°C	(1)

Note (1) The range of temperature and relative humidity is shown in the graph below 90% RH Max. . (39℃ ≥ Ta) If the temperature is higher than 40 ℃, the maximum temperature of wet–bulb shall be less than 39℃. No condensation

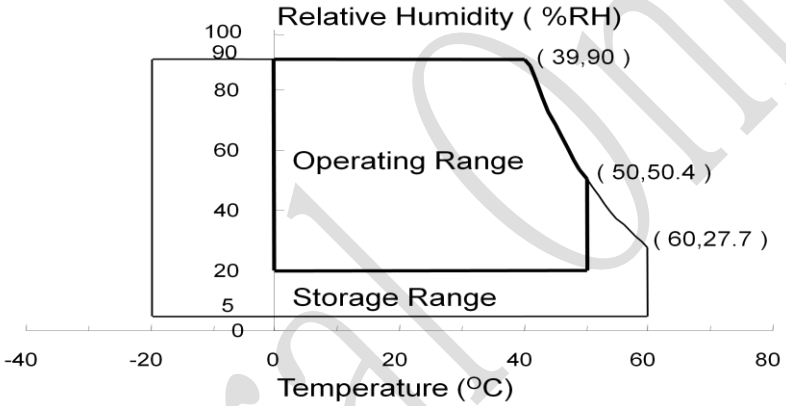

2.2 ELECTRICAL ABSOLUTE RATINGS

(1) TFT LCD MODULE VDD=3.3V, VSS=GND=0V

Item	Symbol	Min.	Max.	Unit	Note
Power Supply Voltage	VDD	VSS-0.3	VDD+0.3	V	(1)
Logic Input Voltage	VIN	VSS-0.3	VDD+0.3	V	(1)

Note (1) Within Operating Temperature

3. OPTICAL CHARACTERISTICS

The following items are measured under the stable conditions.* The optical characteristics should be measured in the dark room or the equivalent state

* Ta = 25 ± 2 °C, V_{DD}=3.7V, fv= 60Hz, fDCLK = 69.53MHz, IF = 100%@13.5mA

Item		Symbol	Condition	Min.	Typ.	Max	Unit	Note
Contrast Ratio (Center)		CR	Normal Viewing Angle ϕ = 0 θ = 0	600	900	-	-	Note (2)
Response Time at Ta (Rising + Falling)		TRT		-	16	30	msec	Note (3)
Transmittance		Tr			6.0		%	
Gamma				-	2.4	-		
Viewing Angle	Hor.	θL	CR ≥ 10	-	80	-	Degrees	Note (1) SR-3
		θR		-	80	-		
	Ver.	ϕH		-	80	-		
		ϕL		-	80	-		
Color Gamut				-	70		%	NTSC

Note (1) The definition of viewing angle: The range of viewing angle (10 ≤ C/R)

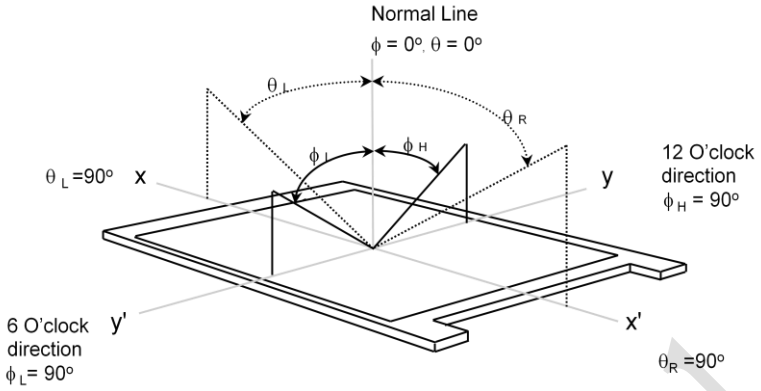

Note (2) Measurement point : Panel center 1 point (CA-310)
BLU for measurement : Center Rank BLU

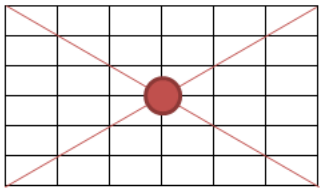

① C/R : Contrast ratio

$$CR = \frac{\text{Full White Luminance of Panel center}}{\text{Full Black Luminance of Panel center}}$$

② The definition of average luminance of white (YL,AVG) :
Measure the luminance of white at center.

③ Gamma Measurement

Equipment : CA-210, Condition : NOTE(2)-⑤

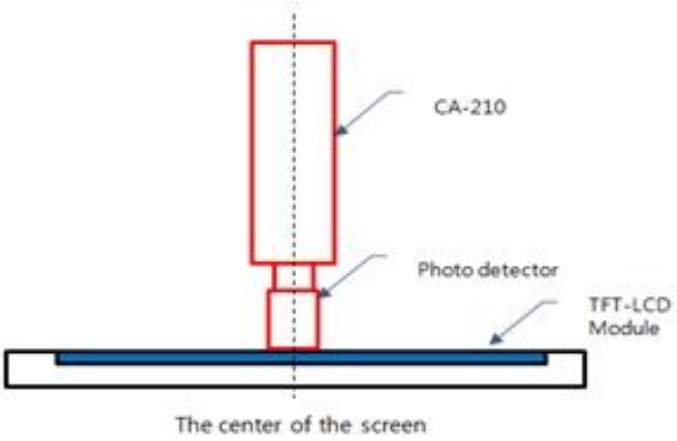

Note (3) The definition of Response time: Subtotal of the time, during which the transmission changes from 10% to 90% when the TFT turns on and off.

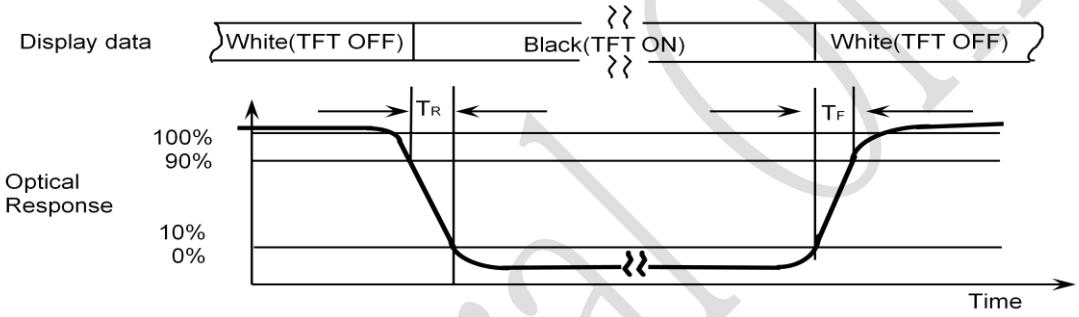

4. BLOCK DIAGRAM

4.1 TFT LCD MODULE

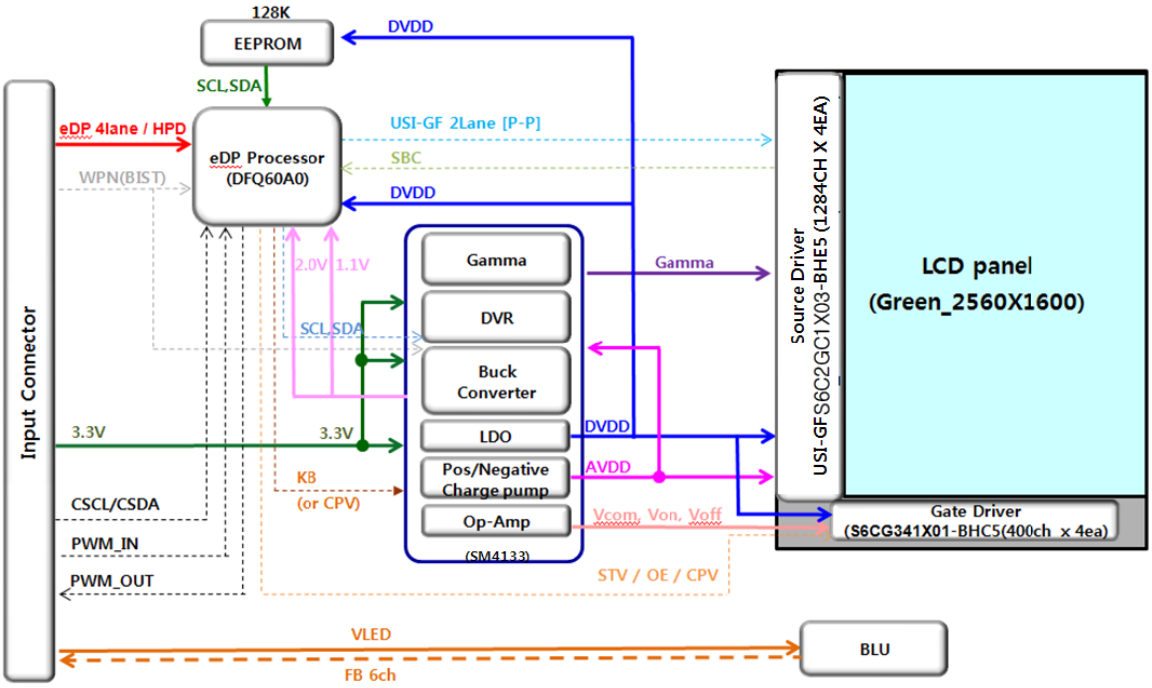

5. ELECTRICAL CHARACTERISTICS

5.1 TFT LCD MODULE

Item			Symbol	Min.	Typ.	Max.	Unit	Note
Power Supply Voltage			VDD	3.0	3.3	3.6	V	
General I/O Pin DC Characteristics	LVCMOS Input	High	V_{IH}	0.7VDD	-	-	V	(1) , (2)
		Low	V_{IL}	-	-	0.25VDD	V	(1) , (2)
	Output	High	V_{OH}	0.8VDD				I_{OL}=4mA I_{OH}=-4mA (2)
		Low	V_{OL}			0.15VDD		
Differential Input Voltage for eDP Receiver Threshold		High	V_{IH}	-	-	+60	mV	
		Low	V_{IL}	-60	-	-	mV	
Vsync Frequency		60 Hz	fv	-	60	-	Hz	-
Main Frequency		60 Hz	f_{DCLK}		268.6		MHz	-
Rush Current			I_{RUSH}	-	-	1.5	A	(4)
Current of Power Supply		White	I_{DD}	-	258	279	mA	(3) @ White
Power Consumption		White	PCC	-	0.85	0.92	W	(3) @ White

Note (1) Display data pins and timing signal pins should be connected.(GND = 0V)
(2) fV = 60Hz, fDCLK = 268.6 MHZ, VCC = 3.3V , DC Current.
(3) Power dissipation pattern (Full white)

*a) White Pattern

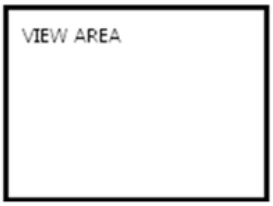

(4) Rush Current measuring condition (Vcc rising time = 470us)

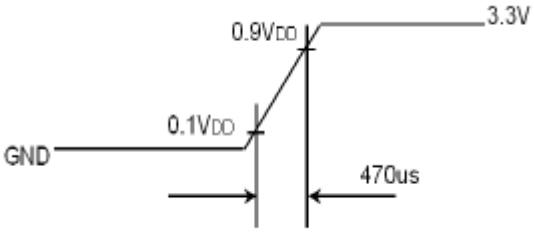

5.2 Interface Receiver/Transmitter Characteristics

5.2.1 eDP Receiver Main Link Characteristics (DP Ver1.3)

Parameter	SYMBOL	MIN.	TYP.	MAX.	UNIT	NOTE
Differential peak-to-peak input voltage	$V_{RX\text{-}DIFFp\text{-}p}$	100		1320	mV	
RX. Input DC common mode voltage	VRX-DC-CM	-	GND	-	V	
Single-ended termination resistance	RRX_SE	40	50	60	ohm	
Differential termination resistance	RRX_DIFF	80	100	120	ohm	
Rx intra-pair skew tolerance at HBR	LRX_SKEW_INTARA_PAIR			150	ps	
Rx intra-pair skew tolerance at RBR	LRX_SKEW_INTARA_PAIR			300	ps	

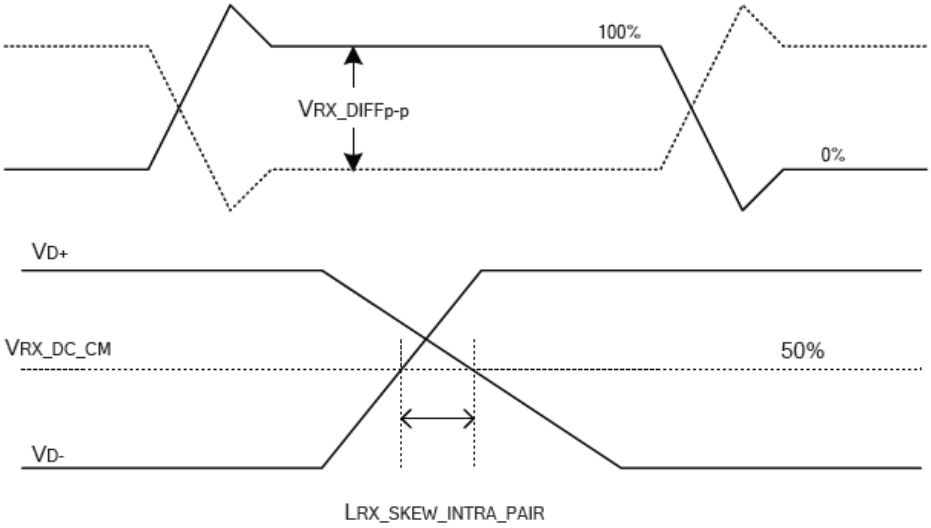

5.2.2 eDP Receiver AUX Characteristic

Parameter	SYMBOL	MIN.	TYP.	MAX.	UNIT	NOTE
Unit Interval for AUX channel	**UI**	0.4	0.5	0.6	us	
AUX differential peak-to-peak Voltage swing at receiving device	**VAUX-DIFF-PP**	500	-	1000	mV	
AUX DC common mode voltage when receiving	**VAUX-DC-CM-RX**		GND		V	
AUX DC common mode voltage when transmitting	**VAUX-DC-CM-TX**		0.15		V	
AUX short circuit current limit	**IAUX-SHORT**	-	-	20	mA	
AUX AC coupling capacitor	**CAUX**	75	-	200	nF	

5.2.3 USI-GIF Transmitter Characteristic

Parameter	SYMBOL	MIN.	TYP.	MAX.	UNIT	NOTE
Differential output voltage at default setting	VOD	320	400	480	mV	Rterm=100ohm
Output common mode voltage	Vcm	500	600	700	mV	Rterm=100ohm

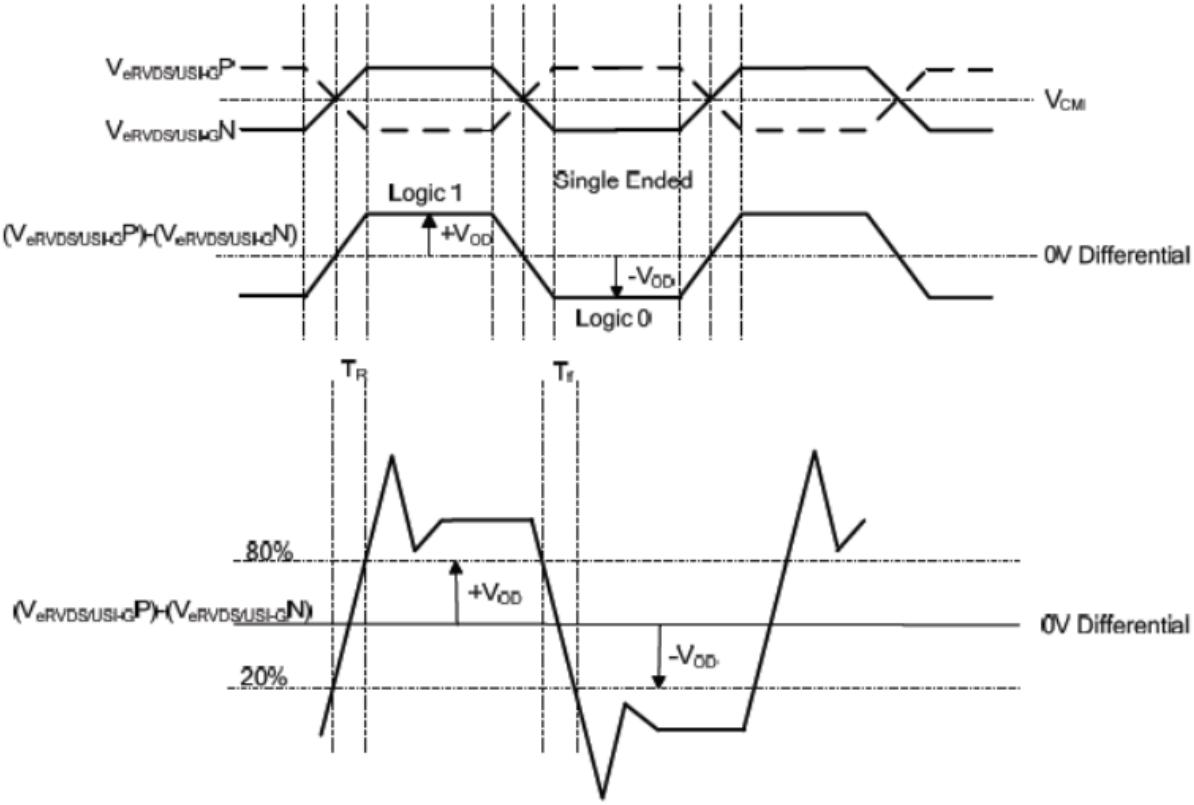

5.3 INTERFACE TIMING

5.3.1 TIMING PARAMETERS

Signal	Item	Symbol	Min.	Typ.	Max.	Unit	Note
Frame Frequency	Cycle	fv		60		Hz	
		TV	1606	1646		Lines	
Vertical Active Display Term	Display Period	TVD	-	1600	-	Lines	
One Line Scanning Time	Cycle	TH	2688	2720		Clocks	
Horizontal Active Display Term	Display Period	THD	-	2560	-	Clocks	

5.3.2 TIMING DIAGRAMS OF INTERFACE SIGNAL

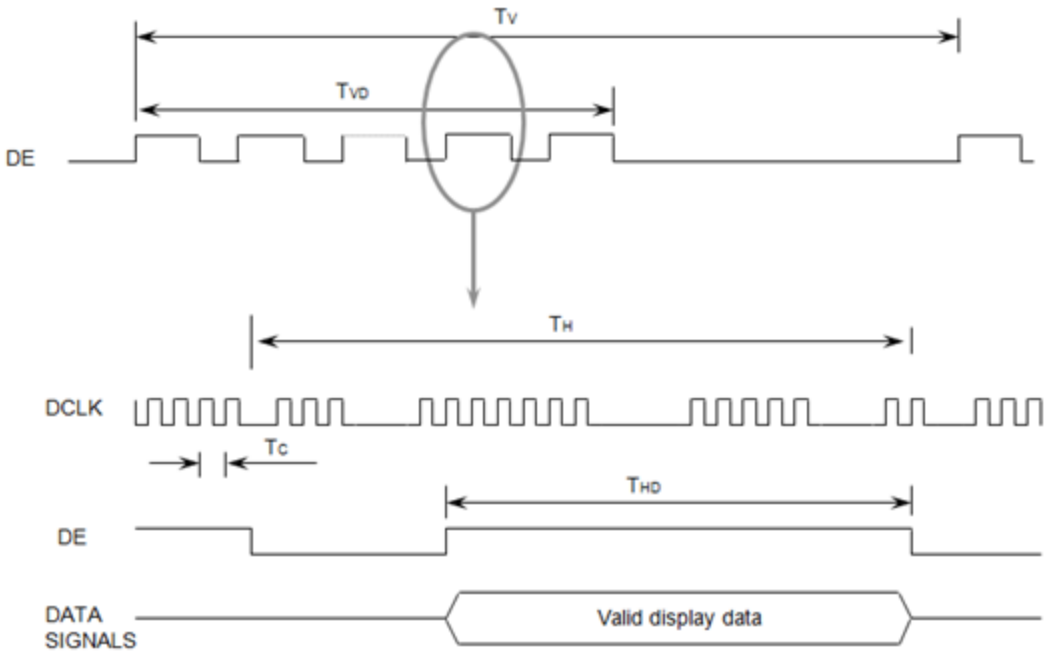

5.4 INPUT COLOR DATA MAPPING

Color	Display	Data Signal																								Gray Scale Level
		Red								Green								Blue								
		R0	R1	R2	R3	R4	R5	R6	R7	G0	G1	G2	G3	G4	G5	G6	G7	B0	B1	B2	B3	B4	B5	B6	B7	
Basic Colors	Black	0	0	0	0	0	0	0	0	0	0	0	0	0	0	0	0	0	0	0	0	0	0	0	0	-
	Blue	0	0	0	0	0	0	0	0	0	0	0	0	0	0	0	0	1	1	1	1	1	1	1	1	-
	Green	0	0	0	0	0	0	0	0	1	1	1	1	1	1	1	1	0	0	0	0	0	0	0	0	-
	Cyan	0	0	0	0	0	0	0	0	1	1	1	1	1	1	1	1	1	1	1	1	1	1	1	1	-
	Red	1	1	1	1	1	1	1	1	0	0	0	0	0	0	0	0	0	0	0	0	0	0	0	0	-
	Magenta	1	1	1	1	1	1	1	1	0	0	0	0	0	0	0	0	1	1	1	1	1	1	1	1	-
	Yellow	1	1	1	1	1	1	1	1	1	1	1	1	1	1	1	1	0	0	0	0	0	0	0	0	-
	White	1	1	1	1	1	1	1	1	1	1	1	1	1	1	1	1	1	1	1	1	1	1	1	1	-
Gray Scale Of Red	Black	0	0	0	0	0	0	0	0	0	0	0	0	0	0	0	0	0	0	0	0	0	0	0	0	R0
	Dark	1	0	0	0	0	0	0	0	0	0	0	0	0	0	0	0	0	0	0	0	0	0	0	0	R1
	↑	0	1	0	0	0	0	0	0	0	0	0	0	0	0	0	0	0	0	0	0	0	0	0	0	R2
	:	:	:	:	:	:	:	:	:	:	:	:	:	:	:	:	:	:	:	:	:	:	:	:	:	R3~R252
	:	:	:	:	:	:	:	:	:	:	:	:	:	:	:	:	:	:	:	:	:	:	:	:	:	
	↓	1	0	1	1	1	1	1	1	0	0	0	0	0	0	0	0	0	0	0	0	0	0	0	0	R253
	Light	0	1	1	1	1	1	1	1	0	0	0	0	0	0	0	0	0	0	0	0	0	0	0	0	R254
	Red	1	1	1	1	1	1	1	1	0	0	0	0	0	0	0	0	0	0	0	0	0	0	0	0	R255
Gray Scale Of Green	Black	0	0	0	0	0	0	0	0	0	0	0	0	0	0	0	0	0	0	0	0	0	0	0	0	G0
	Dark	0	0	0	0	0	0	0	0	1	0	0	0	0	0	0	0	0	0	0	0	0	0	0	0	G1
	↑	0	0	0	0	0	0	0	0	0	1	0	0	0	0	0	0	0	0	0	0	0	0	0	0	G2
	:	:	:	:	:	:	:	:	:	:	:	:	:	:	:	:	:	:	:	:	:	:	:	:	:	G3~G252
	:	:	:	:	:	:	:	:	:	:	:	:	:	:	:	:	:	:	:	:	:	:	:	:	:	
	↓	0	0	0	0	0	0	0	0	1	0	1	1	1	1	1	1	0	0	0	0	0	0	0	0	G253
	Light	0	0	0	0	0	0	0	0	0	1	1	1	1	1	1	1	0	0	0	0	0	0	0	0	G254
	Green	0	0	0	0	0	0	0	0	1	1	1	1	1	1	1	1	0	0	0	0	0	0	0	0	G255
Gray Scale Of Blue	Black	0	0	0	0	0	0	0	0	0	0	0	0	0	0	0	0	0	0	0	0	0	0	0	0	B0
	Dark	0	0	0	0	0	0	0	0	0	0	0	0	0	0	0	0	1	0	0	0	0	0	0	0	B1
	↑	0	0	0	0	0	0	0	0	0	0	0	0	0	0	0	0	0	1	0	0	0	0	0	0	B2
	:	:	:	:	:	:	:	:	:	:	:	:	:	:	:	:	:	:	:	:	:	:	:	:	:	B3~B252
	:	:	:	:	:	:	:	:	:	:	:	:	:	:	:	:	:	:	:	:	:	:	:	:	:	
	↓	0	0	0	0	0	0	0	0	0	0	0	0	0	0	0	0	1	0	1	1	1	1	1	1	B253
	Light	0	0	0	0	0	0	0	0	0	0	0	0	0	0	0	0	0	1	1	1	1	1	1	1	B254
	Blue	0	0	0	0	0	0	0	0	0	0	0	0	0	0	0	0	1	1	1	1	1	1	1	1	B255

Note (1) Definition of gray : Rn: Red gray, Gn: Green gray, Bn: Blue gray (n=gray level)
Note (2) Input signal: 0 =Low level voltage, 1=High level voltage

5.5 POWER ON/OFF SEQUENCE

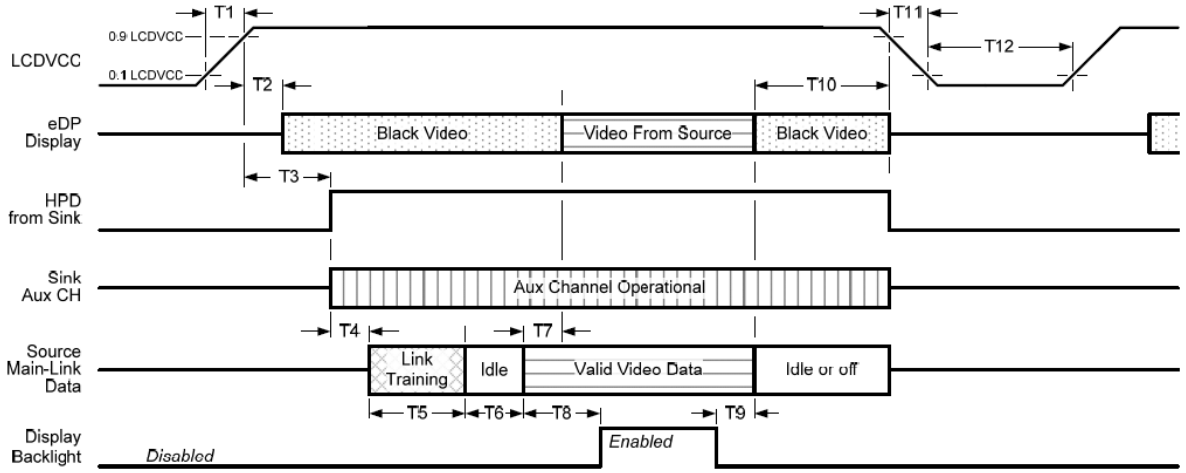

Timing Parameter	Specification	Notes
T1	0.5ms ≤ T1 ≤ 10ms	
T2	0ms ≤ T2 ≤ 350ms	Prevent display noise until valid video data is received from the Source(See note 1 below)
T3	0ms ≤ T3 ≤ 350ms	Sink AUX Channel must be optional upon HPD high
T4	-	Allow for Source to read Link capability and initialize
T5	-	Dependant on Source link training protocol
T6	-	Min accounts for required BS-Idle pattern. Max allows for Source frame synchronization
T7	0ms ≤ T7 ≤ 50ms	Max allows Sink validate video data and timing
T8	-	Source must assure display video is stable
T9	-	Source must assure backlight is no longer illuminated(See note 1 below)
T10	0ms ≤ T10 ≤ 500ms	
T11	T11 ≤ 20ms	
T12	T12 ≥ 500ms	

NOTE(1) The Sink must include the ability to generate black video autonomously. The Sink must automatically Enable black video under the following condition.

- Upon LCDVCC power-on(within T2 max)
- When the "NO VideoStream_Flag"(VB-ID Bit 3) is received from the Source(at the end of T9)
- When no Main Link data, or invalid video data, is received from the Source. Black video must be Displayed within 50ms(max) from the start of either condition. Video data can be deemed invalid Based on MSA and timing information, for example.

NOTE(2) The Sink may implement the ability to disable the black video function, as described in Notes 1, above, for system development and debugging purposes.

NOTE(3) The Sink must support AUX Channel polling by the Source immediately following LCDVCC power-on Without causing damage to the Sink device (the Source can re-try if the Sink is not ready). The Sink must be able to respond to an AUX Channel transaction with the time specified within T3 max.

5.6 INPUT TERMINAL PIN ASSIGNMENT

5.6.1 INPUT SIGNAL & POWER

Pin	Symbol	Functions	Pin	Symbol	Functions
1	GND	Analog ground	24	GND	Signal Ground
2	GND	Analog ground	25	DRX3N	Negative eDP Differential Data Input – 4th Channel
3	ID_CHECK	Customer Option(Vendor Code Detect) - 0V	26	DRX3P	Positive eDP Differential Data Input – 4thChannel
4	HPD	Hot Plug Detection	27	GND	Signal Ground
5	VCC	Module Input Voltage	28	FB1	VLED Current Feedback #1
6	VCC	Module Input Voltage	29	FB2	VLED Current Feedback #2
7	VCC	Module Input Voltage	30	FB3	VLED Current Feedback #3
8	VCC	Module Input Voltage	31	FB4	VLED Current Feedback #4
9	VCC	Module Input Voltage	32	FB5	VLED Current Feedback #5
10	NC(WPN)	Write Protection Pin	33	FB6	VLED Current Feedback #6
11	NC	No connection	34	GND	Analog ground
12	GND	Signal Ground	35	NC	No connection
13	DAUXP	DP Aux channel [Positive]	36	VLED	LED Input Voltage
14	DAUXN	DP Aux channel [Negative]	37	VLED	LED Input Voltage
15	GND	Signal Ground	38	VLED	LED Input Voltage
16	DRX0N	Negative eDP Differential Data Input – 1st Channel	39	VLED	LED Input Voltage
17	DRX0P	Positive eDP Differential Data Input – 1st Channel	40	NC	No connection
18	GND	Signal Ground	41	PWM_IN	PWM_IN
19	DRX1N	Negative eDP Differential Data Input – 2nd Channel	42	PWM_OUT	PWM_OUT
20	DRX1P	Positive eDP Differential Data Input – 2nd Channel	43	SCL_P	T-CON SCL Signal
21	GND	Signal Ground	44	SDA_P	T-CON SDA Signal
22	DRX2N	Negative eDP Differential Data Input – 3rd Channel	45	GND	Analog ground
23	DRX2P	Positive eDP Differential Data Input – 3rd Channel			

6. PIXEL FORMAT

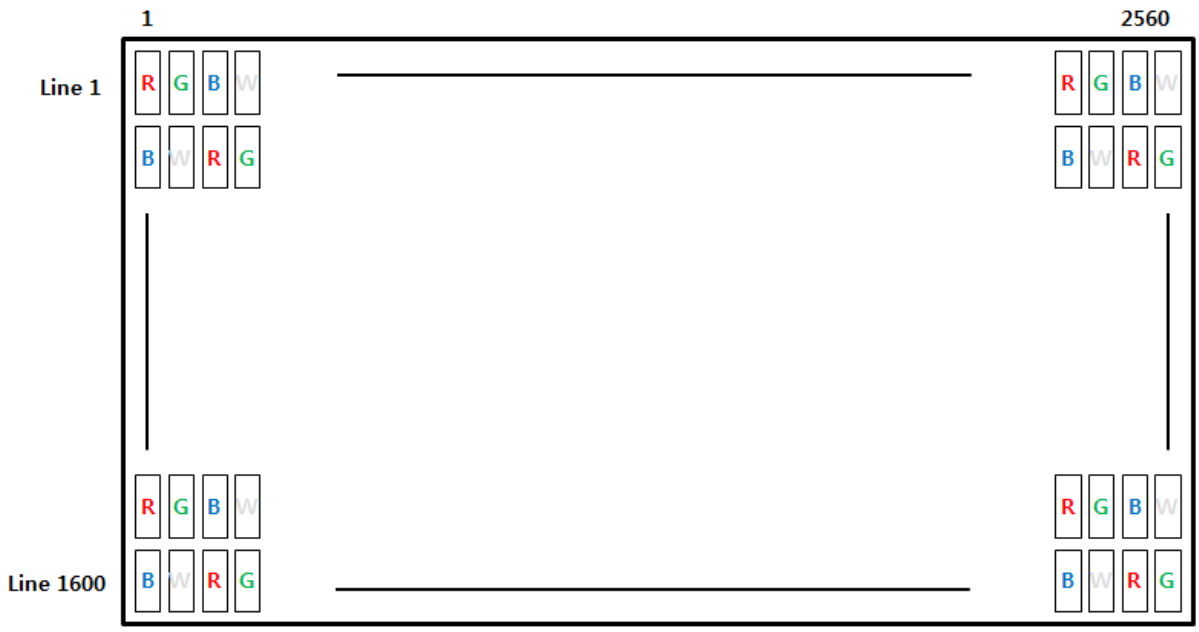

7. OUTLINE DIMENSION

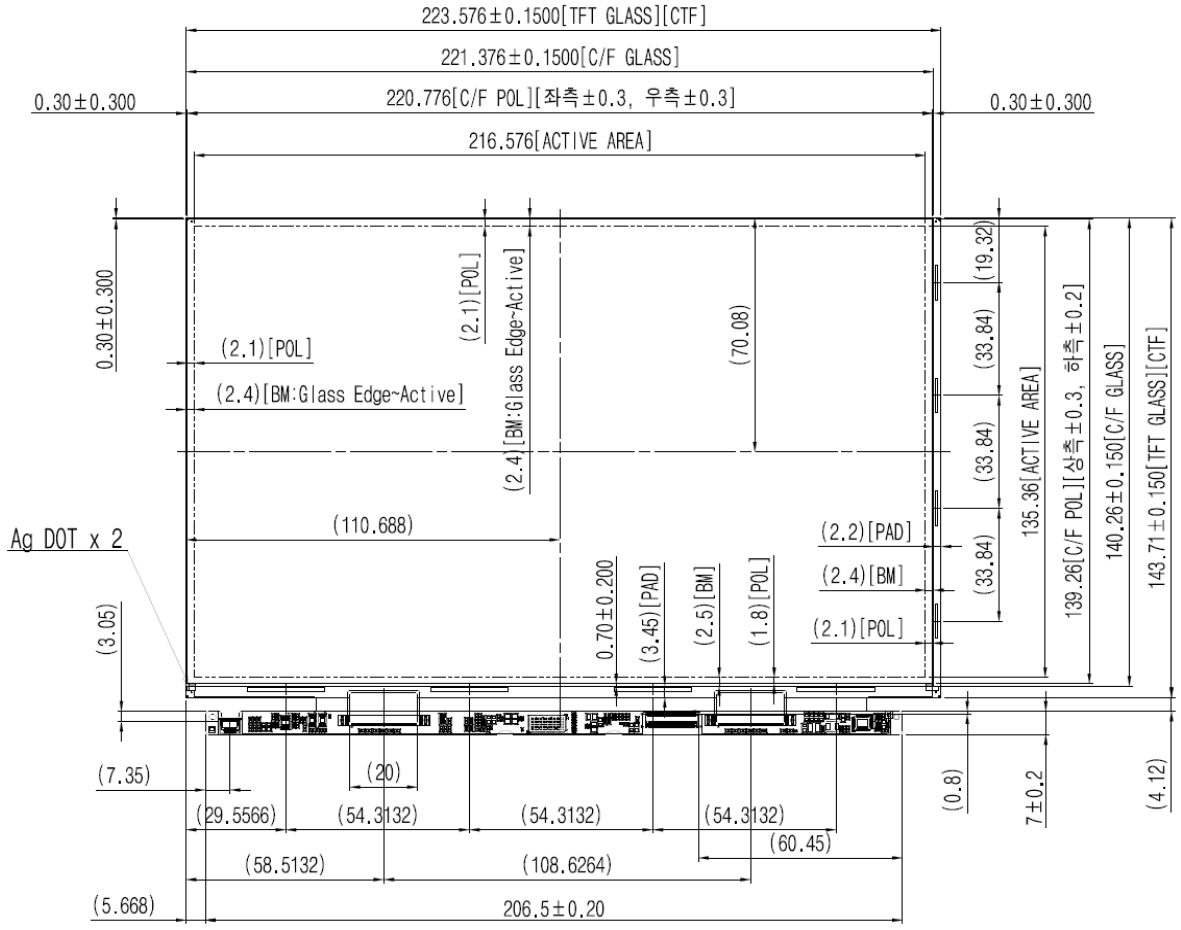

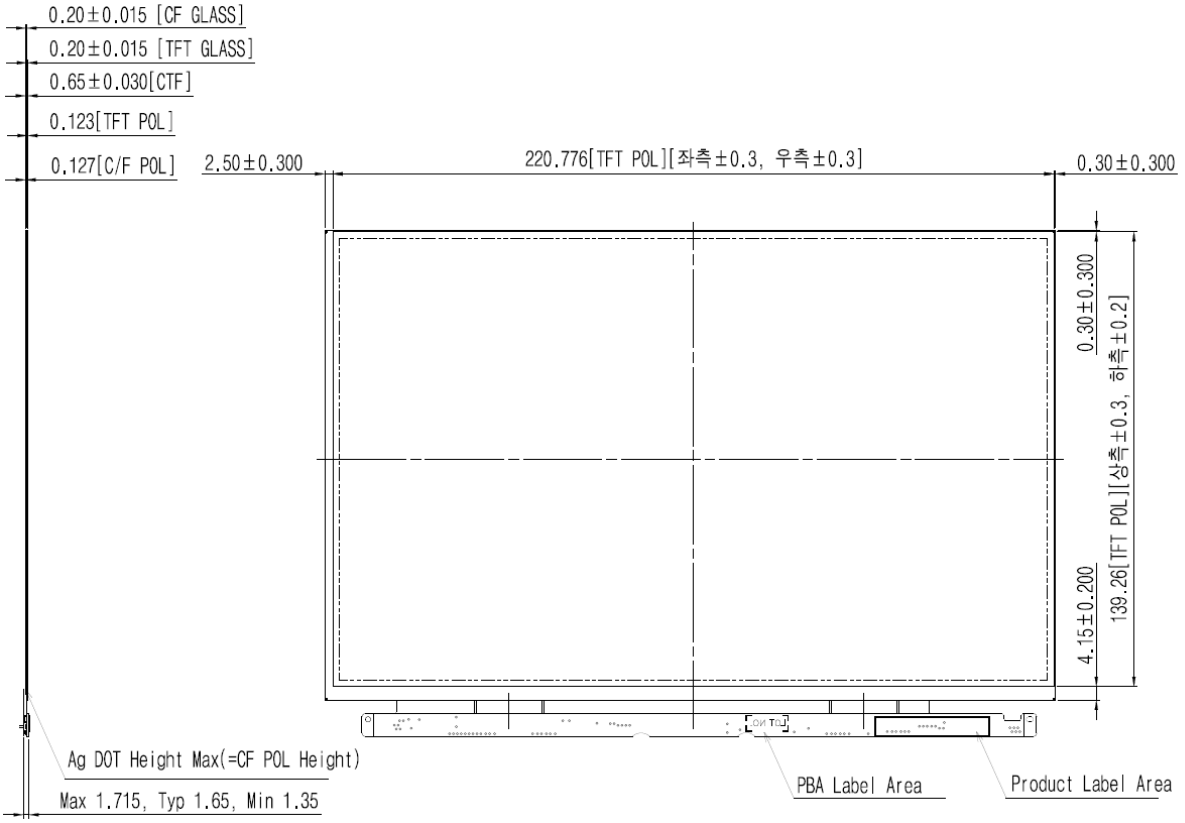

8. MARKING

-A nameplate bearing followed by is affixed to a shipped product at the specified location on each product.

(1) Parts number LSL101DL01
(2) Cell ID

1	2	3	4	5					6	7		8	
5	D	D	B	0	3	5	1	2	B	1	3	2	0

Type designation

No 1. Product line (5: 5Line, 6: 6Line)

No 2. Device Code

No 3. Year(A : 2010, B : 2011, C:2012……)

No 4. Month (A -1M, B - 2M,C - 3M……)

9. GENERAL PRECAUTIONS

9.1 HANDLING

(a) When the module is assembled, It should be attached to the system firmly using every mounting holes. Be careful not to twist and bend the modules.

(b) Refrain from strong mechanical shock and / or any force to the module. In addition to damage, this may cause improper operation or damage to the module and CCFT back-light.

(c) Note that polarizers are very fragile and could be easily damaged. Do not press or scratch the surface harder than a HB pencil lead.

(d) Wipe off water droplets or oil immediately. If you leave the droplets for a long time, Staining and discoloration may occur.

(e) If the surface of the polarizer is dirty, clean it using some absorbent cotton or soft cloth.

(f) The desirable cleaners are water, IPA (Isoprophyl Alcohol) or Hexane. Do not use Ketone type materials(ex. Acetone), Ethyl alcohol, Toluene, Ethyl acid or Methyl chloride. It might permanent damage to the polarizer due to chemical reaction.

(g) If the liquid crystal material leaks from the panel, it should be kept away from the eyes or mouth .In case of contact with hands, legs or clothes, it must be washed away thoroughly with soap.

(h) Protect the module from static, it may cause damage to the C-MOS Gate Array IC.

(i) Use fingerstalls with soft gloves in order to keep display clean during the incoming inspection and assembly process.

(j) Do not disassemble the module.

(k) Do not pull or fold the LED FPC.

(l) Do not touch any component which is located on the back side (consult the figure on page 39).

(m) Protection film for polarizer on the module shall be slowly peeled off just before use so that the electrostatic charge can be minimized.

(n) Pins of I/F connector shall not be touched directly with bare hands.

9.2 STORAGE

We highly recommend to comply with the criteria in the table below.

ITEM	Unit	Min.	Max.
Storage Temperature	(℃)	5	40
Storage Humidity	(%rH)	35	75
Storage Life	12 months		
Storage Condition	- The storage room should be equipped with a good ventilation facility, which has a temperature controlling system. - Products should be placed on the pallet, which is away from the wall not on the floor. - Prevent products from being exposed to the direct sunlight, moisture, and water.; Be cautious not to pile the products up. - Avoid storing products in the environment, which other hazardous material is placed. - If products are delivered or kept in the storage facility more than 3 months,we recommend you to leave products under the condition including a 20℃ temperature and a humidity of 50% for 24 hours. - If you store semi-manufactured products for more than 3 months, bake the products under the condition including the 50℃ temp. and the 10% humidity for 24hrs after being used.		

9.3 OPERATION

(a) Do not connect, disconnect the module in the " Power On" condition.

(b) Power supply should always be turned on/off by following item 6.3 " Power on/off sequence".

(c) Module has high frequency circuits. Sufficient suppression to the electromagnetic interference shall be done by system manufacturers. Grounding and shielding methods may be important to minimize the interference.

(d) The FPC cable between the LED chips and its converter power supply shall be a minimized length and be connected directly .The longer cable between the back-light and the converter may cause lower luminance of light source (LED).

(e) The standard limited warranty is only applicable when the module is used for general notebook applications. If used for purposes other than as specified, SEC is not to be held reliable for the defective operations. It is strongly recommended to contact SEC to find out fitness for a particular purpose.

9.4 OTHERS

(a) Ultra-violet ray filter is necessary for outdoor operation.

(b) Avoid condensation of water. It may result in improper operation or disconnection of electrode.

(c) Do not exceed the absolute maximum rating value. (the supply voltage variation, input voltage variation, Variation in part contents and environmental temperature, so on) Otherwise the module may be damaged.

(d) If the module displays the same pattern continuously for a long period of time, it can be the situation whenThe image "sticks" to the screen.

(e) This module has its circuitry PCB's on the rear side and should be handled carefully in order not to be stressed.