Product Information

Customer : General **DATE : 23. May. 2011**

SAMSUNG TFT-LCD

MODEL : **LTA460HM06**

The Information Described in this Specification is Preliminary and can be changed without prior notice

LCD Business

Samsung Electronics Co . , LTD.

Contents

Revision History ---------- (3)

General Description ---------- (4)

General Information ---------- (4)

1. Absolute Maximum Ratings ---------- (5)

2. Optical Characteristics ---------- (6)

3. Electrical Characteristics ---------- (9)
   3.1 TFT LCD Module
   3.2 Back Light Unit
   3.3 Converter Input & Specification

4. Input Terminal Pin Assignment ---------- (12)
   4.1 Input Signal & Power
   4.2 Converter Input Pin Configuration
   4.3 Converter Input Power Sequence
   4.4 LVDS Interface
   4.5 Input Signals, Basic Display Colors and Gray Scale of Each Color

5. Interface Timing ---------- (18)
   5.1 Timing Parameters (DE only mode)
   5.2 LVDS Input data Characteristics
   5.3 Timing Diagrams of interface Signal (DE only mode)
   5.4 Power ON/OFF Sequence

6. Outline Dimension ---------- (21)

7. Packing ---------- (23)

8. Marking & Others ---------- (24)

9. General Precaution ---------- (25)
   9.1 Handling
   9.2 Storage
   9.3 Operation
   9.4 Operation Condition Guide
   9.5 Others

Revision History

Date	Rev. No	Page	Summary
Oct. 25. 2010	000	all	First issued
Feb. 22. 2011	001	all	Update TBD Items
Feb. 24. 2011	002	7	Revise response time
		15	Revise Inverter input power sequence
		18	Revise Vertical total

General Description

Description

LTA460HM06 is a color active matrix liquid crystal display (LCD) that uses amorphous silicon TFT (Thin Film Transistor) as switching components. This model is composed of a TFT LCD panel, a driver circuit and a back light unit.

The resolution of a 46.0" is 1920 x 1080 and this model can display up to 16.7 Million colors with wide viewing angle of 89° or higher in all directions. This panel is intended to support applications to provide a excellent performance for Flat Panel Display such as Home-alone Multimedia TFT-LCD TV and High Definition TV.

Features

- RoHS compliance (Pb-free)
- High contrast ratio & aperture ratio with wide color gamut
- SPVA(Super Patterned Vertical Align) mode
- Wide viewing angle (±178°)
- High speed response
- FHD resolution (16:9)
- Low Power consumption
- Edge Type LED (Light Emitted Diode) BLU
- DE (Data Enable) mode
- 2ch LVDS (Low Voltage Differential Signaling) interface (2pixel/clock)

General Information

Items	Specification	Unit	Note
Module Size	1054.5 (H_{TYP}) x 610.8 (V_{TYP})	mm	±1.0mm
	32.4 (Max.)		
Weight	11.8 (Max.)	Kg	
Pixel Pitch	0.530 (H) x 0.530 (W)	mm	
Active Display Area	1018.08 (H) x 572.67 (V)	mm	
Surface Treatment	Haze 2%, Anti-glare	-	
Display Colors	8bit – 16.7M	Colors	
Number of Pixels	1920 x 1080	Pixel	
Pixel Arrangement	RGB vertical stripe	-	
Display Mode	Normally Black	-	
Luminance of White	400 (Typ.)	cd/m^2	

For eyes of General only

1. Absolute Maximum Ratings

If the condition exceeds maximum ratings, it can cause malfunction or unrecoverable damage to the device.

Item		Symbol		Min.	Max.	Unit	Note
Power Supply Voltage		V_{DD}		GND-0.3	*13.2*	V	(1)
Storage temperature		T_{STG}		-20	60	℃	(2)
Glass surface temperature (Operation)	Center	T_{OPR}		0	50	℃	(2),(5)
	T. Uniformity	△T		-	10	℃	
Shock (non - operating)		S_{nop}	X, Y	-	40	G	(3)
			Z	-	30		
Vibration (non - operating)		V_{nop}		-	1.5	G	(4)

Note (1) Ta= 25 ± 2 °C

(2) Temperature and relative humidity range are shown in the figure below.

a. 90 % RH Max. (Ta ≤ 39 °C)

b. Relative Humidity is 90% or less. (Ta > 39 °C)

c. No condensation

(3) 11ms, sine wave, one time for ±X, ±Y, ±Z axis

(4) 10-300 Hz, Sweep rate 10min, 30min for X,Y,Z axis

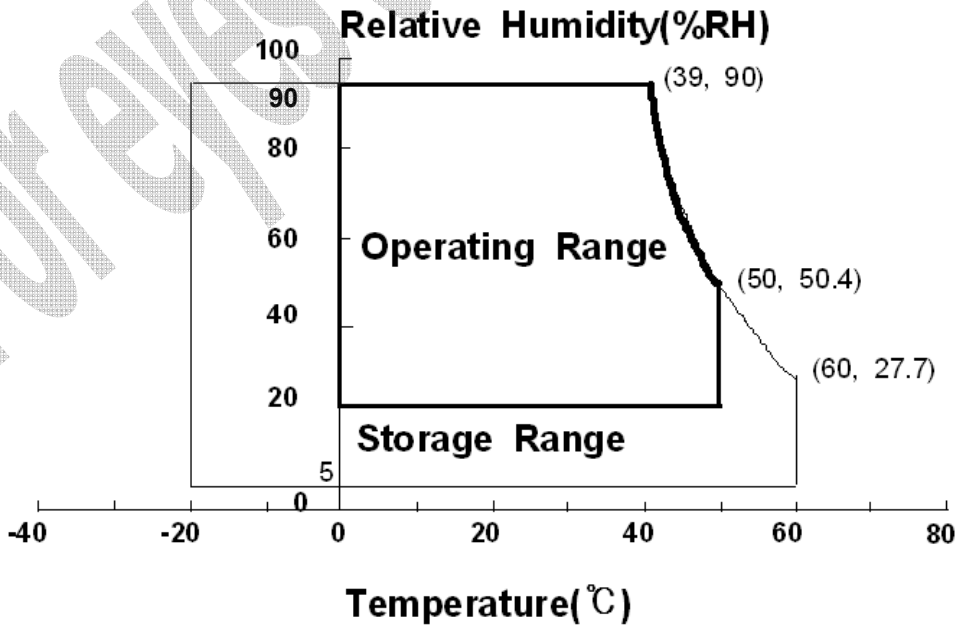

Fig. Temperature and Relative humidity range

For eyes of Samsung only

(5) Definition of test point

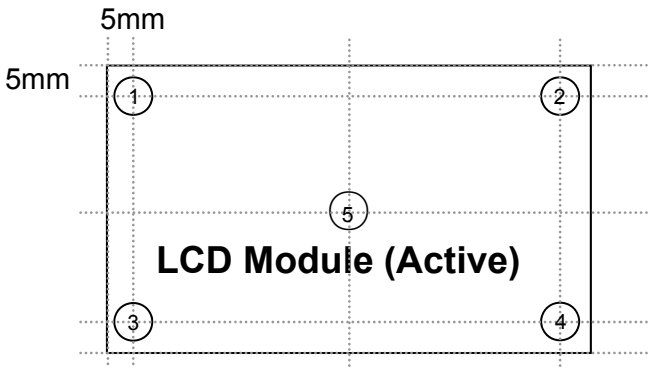

△T should be less than *10* ℃ (△T = | T_{OPR} – T_{MAX}|)

T_{OPR} : Temperature of the center of the glass surface (Test point 5)
T1~ T4 : Temperature of each edge of the glass surface
T_{MAX} : The highest temperature of the glass surface

For eyes of General only

2. Optical Characteristics

The optical characteristics should be measured in a dark room or equivalent.
Measuring equipment : TOPCON RD-80S, TOPCON SR-3 ,ELDIM EZ-Contrast

(Ta = 25 ± 2°C, VDD=12.0V, fv=60Hz, f_{DCLK}=148.5MHz, LED Current = TBD mA)

Item		Symbol	Condition	Min.	Typ.	Max.	Unit	Note
Contrast Ratio (Center of screen)		C/R	Normal θL,R=0 θU,D=0 Viewing Angle	3,000	4,000	-		(1) SR-3
Response Time	G-to-G	Tg		-	8	-	msec	(3) RD-80S
Luminance of White (Center of screen)		Y_L		350	400	-	cd/m²	(4) SR-3
Color Chromaticity (CIE 1931)	Red	Rx		TYP. -0.03	0.653	TYP. +0.03		(5),(6) SR-3
		Ry			0.330			
	Green	Gx			0.310			
		Gy			0.600			
	Blue	Bx			0.150			
		By			0.058			
	White	Wx			0.280			
		Wy			0.290			
Color Gamut		-		-	72	-	%	(5) SR-3
Color Temperature		-		-	10,000	-	K	
Viewing Angle	Hor.	θ_L	C/R≥10	75	89	-	Degree	(6) EZ-Contrast
		θ_R		75	89	-		
	Ver.	θ_U		75	89	-		
		θ_D		75	89	-		
Brightness Uniformity (9 Points)		B_{uni}		-	-	25	%	(2) SR-3

- Test Equipment Setup

The measurement should be executed in a stable, windless and dark room between 40min and 60min after lighting the back light at the given temperature for stabilization of the back light. This should be measured in the center of screen.

Environment condition : Ta = 25 ± 2 °C

For Buyer's Approval Only

Photo detector	Field
SR-3	1°
RD-80S	2°

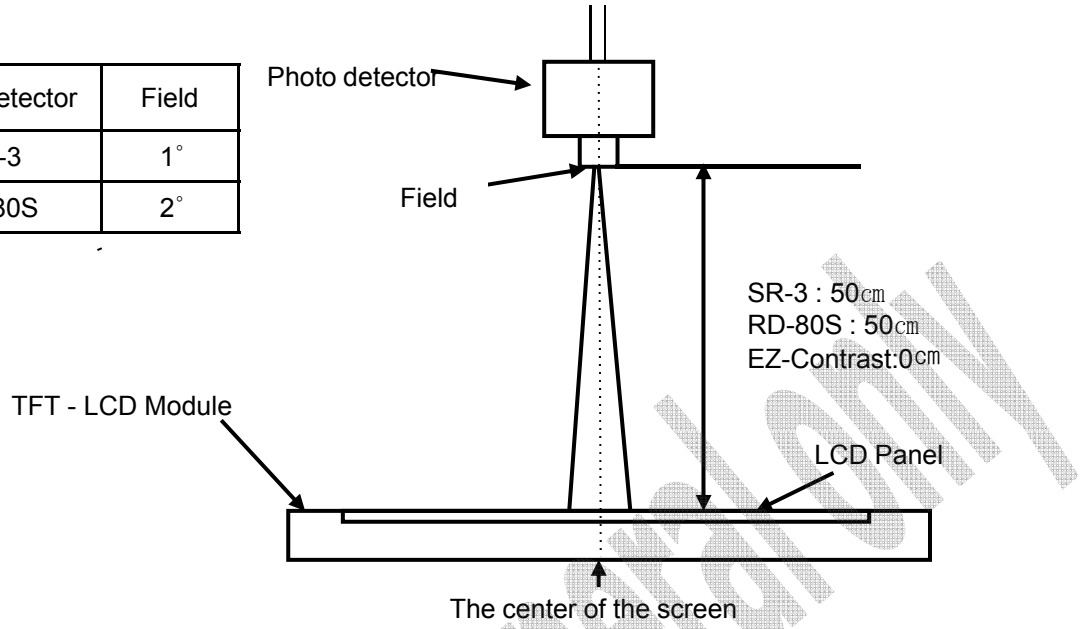

- Definition of test point

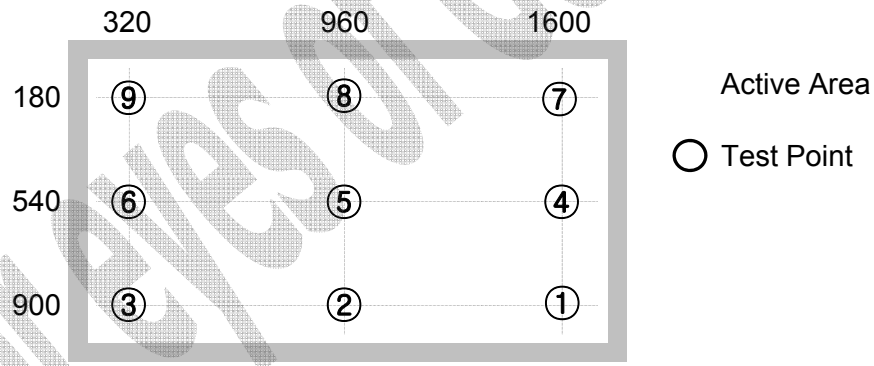

Note (1) Definition of Contrast Ratio (C/R)
: Ratio of gray max (Gmax) & gray min (Gmin) at the center point ⑤ of the panel

$$C/R = \frac{G\max}{G\min}$$

Gmax : Luminance with all pixels white
Gmin : Luminance with all pixels black

For Eyes of General Only

Note (2) Definition of 9 points brightness uniformity (Test pattern : Full White)

$$Buni = 100 * \frac{(B\max - B\min)}{B\max}$$

Bmax : Maximum brightness
Bmin : Minimum brightness

Note (3) Definition of Response time : Sum of Tr, Tf

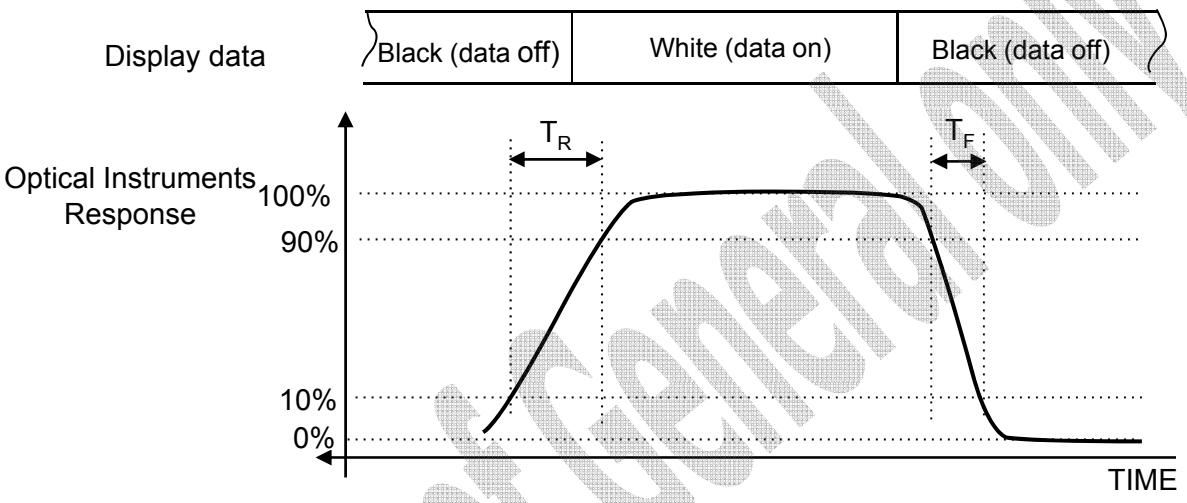

※ G-to-G : Average response time between Gray to Gray (Scale)

Note (4) Definition of Luminance of White : Luminance of white at center point ⑤

Note (5) Definition of Color Chromaticity (CIE 1931)
Color coordinate of Red, Green, Blue & White at center point ⑤

Note (6) Definition of Viewing Angle
: Viewing angle range (C/R ≥10)

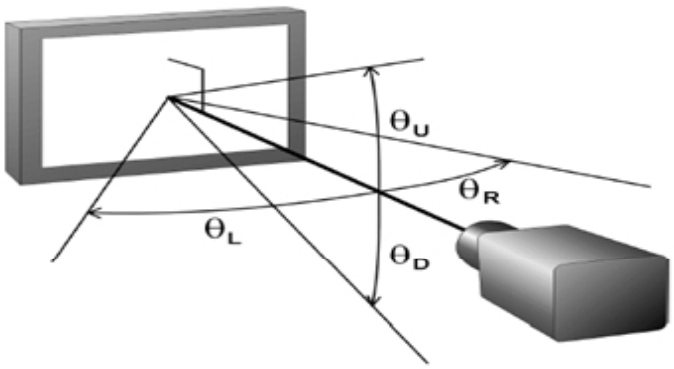

For eyes of General only

3. Electrical Characteristics

3.1 TFT LCD Module

The connector for display data & timing signal should be connected.

Ta = 25°C ± 2 °C

Item		Symbol	Min.	Typ.	Max.	Unit	Note
Voltage of Power Supply		V_{DD}	10.8	12.0	13.2	V	(1)
Current of Power Supply	(a) Black	I_{DD}	-	500	650	mA	(2),(3)
	(b) White		-	500	650	mA	
	(c) N-pattern		-	800	1000	mA	
Vsync Frequency		f_V	45	60	64	Hz	
Hsync Frequency		f_H	60	67.5	70	kHz	
Main Frequency		Fdclk	130	148.5	155	MHz	
Rush Current		I_{RUSH}	-	-	5	A	(4)

Note (1) The ripple voltage should be controlled under 10% of V_{DD}.

(2) fv=60Hz, f_{DCLK} =148.5MHz, V_{DD} = 12.0V, DC Current.

(3) Power dissipation check pattern (LCD Module only)

a) Black Pattern b) White Pattern c) N - Pattern

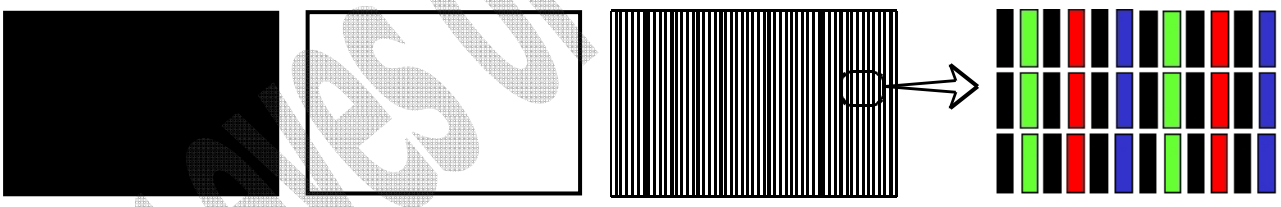

(4) Measurement Conditions

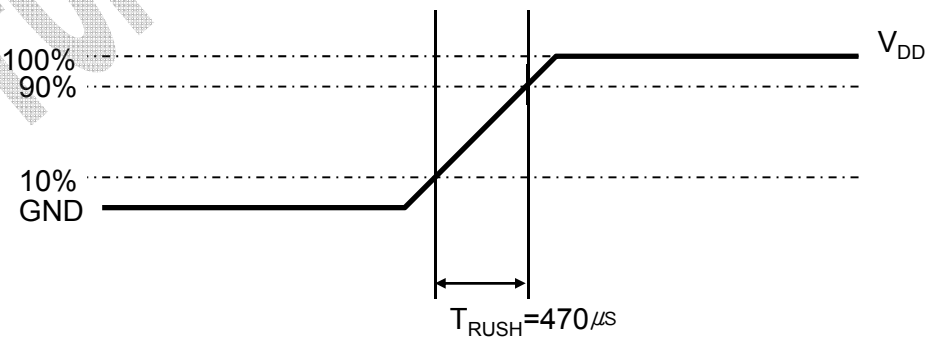

Rush Current I_{RUSH} can be measured when T_{RUSH}. is 470㎲.

For EYES ONLY

3.2 Back Light Unit

The back light unit contains Edge type White LEDs (Light Emitting Diode)

Ta=25 ± 2°C

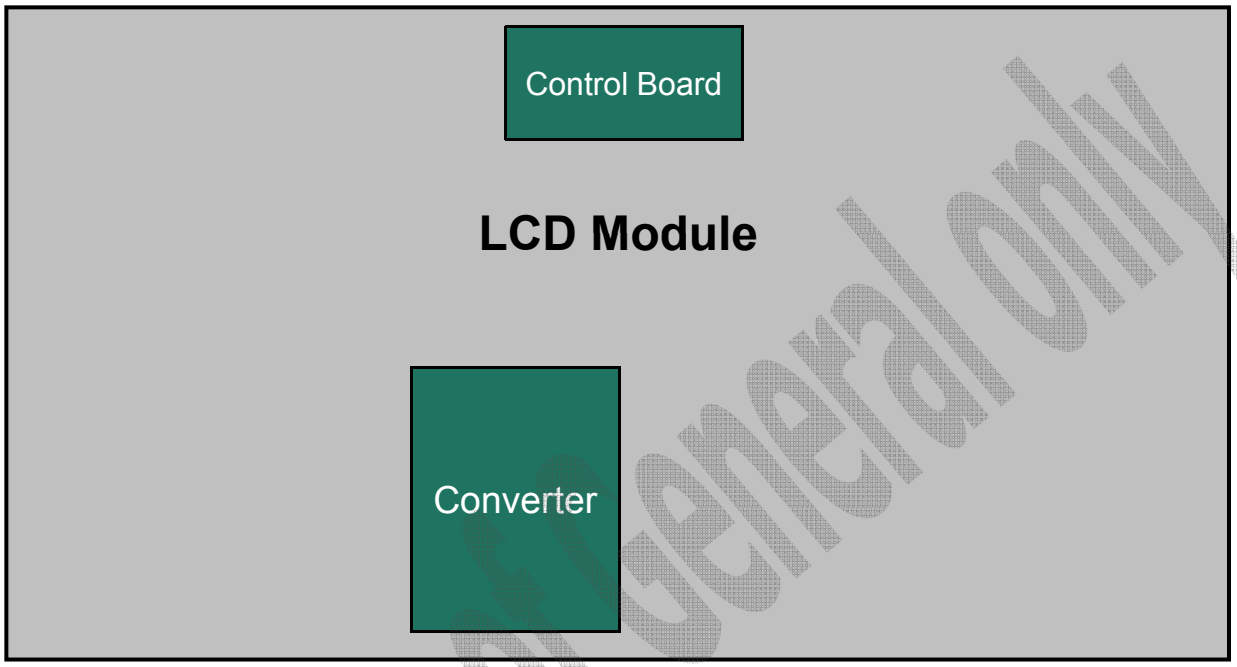

Item	Symbol	Min.	Typ.	Max.	Unit	Note
Operating Life Time	Hr	30,000	-	-	Hour	(1)

Note (1) It is defined as the time to take until the brightness reduces to 50% of its original value.

[Operating condition : Ta = 25±2℃, For single lamp only.]

For eyes of General only

3.3 Converter Input Condition & Specification

Items	Symbol	Conditions	Specifications			Unit	Note
			Min.	Typ.	Max.		
Input Voltage	Vin	-	22	24	26	V	Ta=25±2 °C
Input Current	I_{RUSH}	Vin=24.0V Vdim =3.3V	-	-	3.8	A	
Output Current	$I_{O,MAX}$	Vin = 24.0V V dim =3.3 V	133	140	147	mArms	
Backlight On/Off	ON	Vin=24.0 V	2.4	-	5.5	V	
	OFF	Vin=24.0 V	0	-	0.8		
Dimming Range	$V_{\_DIM}$	Vin :22~26V	0	-	3.3	V	
Dimming Duty Output	D max	Vin=24V Dim:3.3V	100	-	-	%	(2)
	D min	Vin=24V Dim:0V	-	0	-		
Dimming Frequency	F_{PWM}	Vin=24.0 V	-	170	-	Hz	
External Dimming Duty Range	EX_Dim	Min	1	-	100	%	(2)
External Dimming Frequency Range	F_{EX_PWM}	Vin=22.0~26.0 V	95	-	200	Hz	Dim Pin(#13) : Floating
External Dimming Signal Level	V_{PWM}	High (ON)	2.4	-	5.5	V	
		Low (Off)	-0.3	-	0.8		

Note) Power Consumption is measured when 430 [cd/m] of luminance which is the typical luminance.

(1) All data is measured after 120min warm-up.

- Additional Appendix for Supply Current & Power consumption

Items	Symbol	Conditions	Min.	Typ.	Max.	Unit
Input Current	Iin _ overshoot	Vin = 24V, Dim=3.3V (Within 1hr at BLU on)	-	3.2	3.3	A
	Iin _ saturation	Vin = 24V, Dim=3.3V (After 1hr Aging)	-	3.1	3.2	A
Power Consumption (Back light)	P _ Inrush	Vin=24.0V, Vdim = 3.3V	-	-	79.2	Watt
	P _ overshoot	Vin = 24V, Dim=3.3V (Within 1hr at BLU on)	-	76.8	79.2	Watt
	P _ saturation	Vin = 24V, Dim=3.3V (After 1hr Aging)	-	74.4	76.8	Watt

4. Input Terminal Pin Assignment

4.1. Input Signal & Power

Connector : FI-RE51S-HF (JAE)

Pin	Symbol	Description	Pin	Symbol	Description
1	12V	DC power supply	26	RE[0]P	Even LVDS Signal +
2	12V	DC power supply	27	RE[1]N	Even LVDS Signal -
3	12V	DC power supply	28	RE[1]P	Even LVDS Signal +
4	12V	DC power supply	29	RE[2]N	Even LVDS Signal -
5	12V	DC power supply	30	RE[2]P	Even LVDS Signal +
6	NC	NOTE1	31	GND	Ground
7	GND	Ground	32	ROCLK-	Even LVDS Clock -
8	GND	Ground	33	ROCLK+	Even LVDS Clock +
9	GND	Ground	34	GND	Ground
10	RO[0]N	Odd LVDS Signal -	35	RE[3]N	Even LVDS Signal -
11	RO[0]P	Odd LVDS Signal +	36	RE[3]P	Even LVDS Signal +
12	RO[1]N	Odd LVDS Signal -	37	NC	NOTE1
13	RO[1]P	Odd LVDS Signal +	38	NC	
14	RO[2]N	Odd LVDS Signal -	39	GND	Ground
15	RO[2]P	Odd LVDS Signal +	40	NC	NOTE1
16	GND	Ground	41	NC	
17	ROCLK-	Odd LVDS Clock -	42	NC	
18	ROCLK+	Odd LVDS Clock +	43	NC	
19	GND	Ground	44	NC	
20	RO[3]N	Odd LVDS Signal -	45	LVDS_SEL	NOTE2
21	RO[3]P	Odd LVDS Signal +	46	NC	NOTE1
22	NC	NOTE1	47	NC	
23	NC		48	NC	
24	GND	Ground	49	NC	
25	RE[0]N	Even LVDS Signal -	50	NC	
			51	NC	NOTE1

Note1) No Connection: These PINS are used only for SAMSUNG. (DO NOT CONNECT)

Note2) LVDS OPTION : If this PIN is HIGH (3.3 V) → Normal LVDS format

LOW (GND) → JEIDA LVDS format

SEQUENCE : On = V_{DD}(T1) ≥ LVDS Option ≥ Interface Signal(T2)

OFF = Interface Signal(T3) ≥ LVDS Option ≥ V_{DD}

Note(3) Pin number starts from Left side

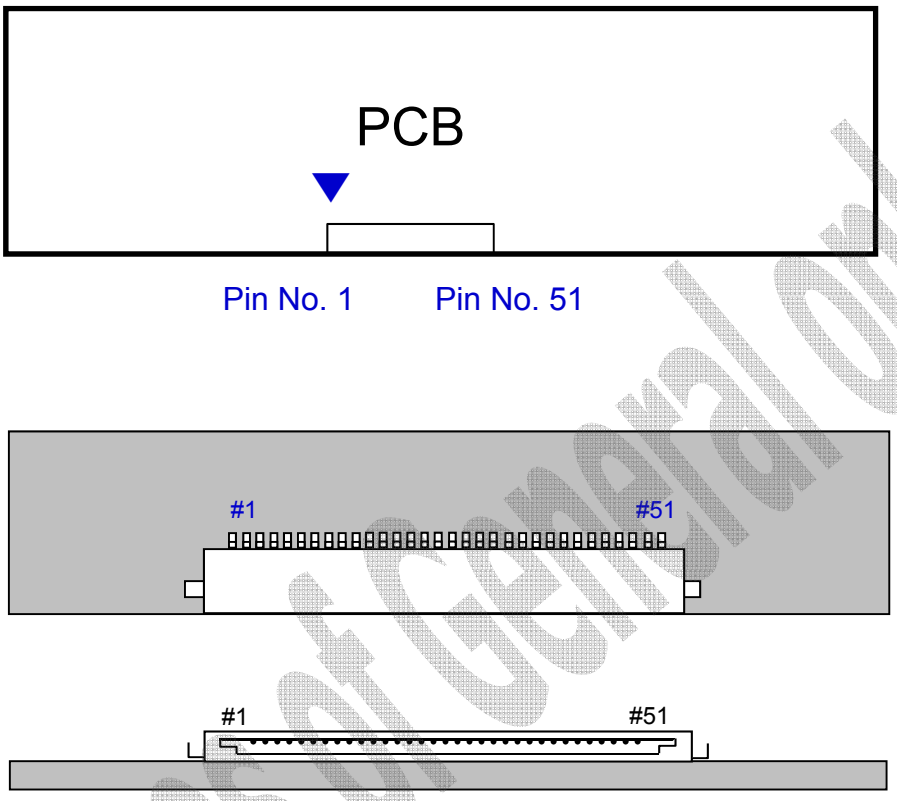

Fig. Connector diagram

a. Power GND pins should be connected to the LCD's metal chassis.
b. All power input pins should be connected together.
c. All NC pin should be separated from other signal or power.

Forever for General only

4.2. Converter Input Pin Configuration

Connector : Yeon-ho, 20022WR-14B1

Pin No.	Pin Configuration(FUNCTION)
	Master
1	24 V
2	24 V
3	24 V
4	24 V
5	24 V
6	GND
7	GND
8	GND
9	GND
10	GND
11	Error Out
12	Backlight On /Off [ON:2.4 – 5.5 V, OFF: 0 - 0.8 V]
13	Dimming Control [0V:Min, 3.3V:Max] *Note(1)
14	External PWM [1~100%] *Note(1)

Note(1) If use Dimming Control, Pin 14 Must be N.C
If use External PWM, Pin 13 Must be N.C

4.3. Converter Input Power Sequence

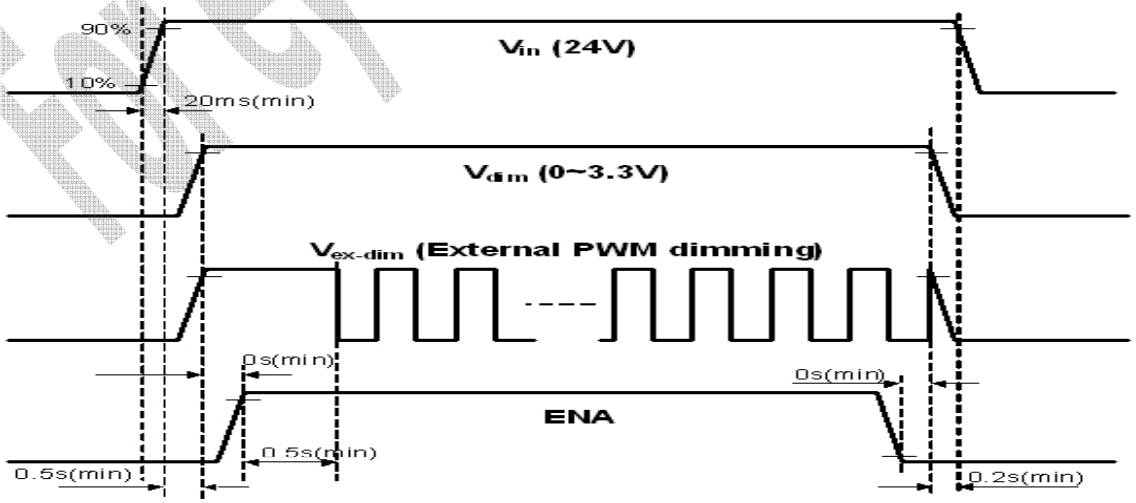

Note) SEQUENCE : ON = Vin(24V) > Dimming Control ≥ Backlight On/Off
OFF = Backlight On/Off ≥ Dimming Control > Vin(24V)

For use in manual only

4.4 LVDS Interface

- LVDS Receiver : T-con (merged)
- Data Format (JEIDA&VESA)

	LVDS pin	JEIDA -DATA	VESA-DATA
TxOUT/RxIN0	TxIN/RxOUT0	R2	R0
	TxIN/RxOUT1	R3	R1
	TxIN/RxOUT2	R4	R2
	TxIN/RxOUT3	R5	R3
	TxIN/RxOUT4	R6	R4
	TxIN/RxOUT6	R7	R5
	TxIN/RxOUT7	G2	G0
TxOUT/RxIN1	TxIN/RxOUT8	G3	G1
	TxIN/RxOUT9	G4	G2
	TxIN/RxOUT12	G5	G3
	TxIN/RxOUT13	G6	G4
	TxIN/RxOUT14	G7	G5
	TxIN/RxOUT15	B2	B0
	TxIN/RxOUT18	B3	B1
TxOUT/RxIN2	TxIN/RxOUT19	B4	B2
	TxIN/RxOUT20	B5	B3
	TxIN/RxOUT21	B6	B4
	TxIN/RxOUT22	B7	B5
	TxIN/RxOUT24	HSYNC	HSYNC
	TxIN/RxOUT25	VSYNC	VSYNC
	TxIN/RxOUT26	DEN	DEN
TxOUT/RxIN3	TxIN/RxOUT27	R0	R6
	TxIN/RxOUT5	R1	R7
	TxIN/RxOUT10	G0	G6
	TxIN/RxOUT11	G1	G7
	TxIN/RxOUT16	B0	B6
	TxIN/RxOUT17	B1	B7
	TxIN/RxOUT23	RESERVED	RESERVED

For Eyes Of General Only

4.5 Input Signals, Basic Display Colors and Gray Scale of Each Color

COLOR	DISPLAY (8bit)	DATA SIGNAL																								GRAY SCALE LEVEL
		RED								GREEN								BLUE								
		R0	R1	R2	R3	R4	R5	R6	R7	G0	G1	G2	G3	G4	G5	G6	G7	B0	B1	B2	B3	B4	B5	B6	B7	
BASIC COLOR	BLACK	0	0	0	0	0	0	0	0	0	0	0	0	0	0	0	0	0	0	0	0	0	0	0	0	-
	BLUE	0	0	0	0	0	0	0	0	0	0	0	0	0	0	0	0	1	1	1	1	1	1	1	1	-
	GREEN	0	0	0	0	0	0	0	0	1	1	1	1	1	1	1	1	0	0	0	0	0	0	0	0	-
	CYAN	0	0	0	0	0	0	0	0	1	1	1	1	1	1	1	1	1	1	1	1	1	1	1	1	-
	RED	1	1	1	1	1	1	1	1	0	0	0	0	0	0	0	0	0	0	0	0	0	0	0	0	-
	MAGENTA	1	1	1	1	1	1	1	1	0	0	0	0	0	0	0	0	1	1	1	1	1	1	1	1	-
	YELLOW	1	1	1	1	1	1	1	1	1	1	1	1	1	1	1	1	0	0	0	0	0	0	0	0	-
	WHITE	1	1	1	1	1	1	1	1	1	1	1	1	1	1	1	1	1	1	1	1	1	1	1	1	-
GRAY SCALE OF RED	BLACK	0	0	0	0	0	0	0	0	0	0	0	0	0	0	0	0	0	0	0	0	0	0	0	0	R0
	DARK ↑	1	0	0	0	0	0	0	0	0	0	0	0	0	0	0	0	0	0	0	0	0	0	0	0	R1
		0	1	0	0	0	0	0	0	0	0	0	0	0	0	0	0	0	0	0	0	0	0	0	0	R2
		:	:	:	:	:	:			:	:	:	:	:	:			:	:	:	:	:	:			R3~ R252
	↓ LIGHT	:	:	:	:	:	:			:	:	:	:	:	:			:	:	:	:	:	:			
		1	0	1	1	1	1	1	1	0	0	0	0	0	0	0	0	0	0	0	0	0	0	0	0	R253
		0	1	1	1	1	1	1	1	0	0	0	0	0	0	0	0	0	0	0	0	0	0	0	0	R254
	RED	1	1	1	1	1	1	1	1	0	0	0	0	0	0	0	0	0	0	0	0	0	0	0	0	R255
GRAY SCALE OF GREEN	BLACK	0	0	0	0	0	0	0	0	0	0	0	0	0	0	0	0	0	0	0	0	0	0	0	0	G0
	DARK ↑	0	0	0	0	0	0	0	0	1	0	0	0	0	0	0	0	0	0	0	0	0	0	0	0	G1
		0	0	0	0	0	0	0	0	0	1	0	0	0	0	0	0	0	0	0	0	0	0	0	0	G2
		:	:	:	:	:	:			:	:	:	:	:	:			:	:	:	:	:	:			G3~ G252
	↓ LIGHT	:	:	:	:	:	:			:	:	:	:	:	:			:	:	:	:	:	:			
		0	0	0	0	0	0	0	0	1	0	1	1	1	1	1	1	0	0	0	0	0	0	0	0	G253
		0	0	0	0	0	0	0	0	0	1	1	1	1	1	1	1	0	0	0	0	0	0	0	0	G254
	GREEN	0	0	0	0	0	0	0	0	1	1	1	1	1	1	1	1	0	0	0	0	0	0	0	0	G255
GRAY SCALE OF BLUE	BLACK	0	0	0	0	0	0	0	0	0	0	0	0	0	0	0	0	0	0	0	0	0	0	0	0	B0
	DARK ↑	0	0	0	0	0	0	0	0	0	0	0	0	0	0	0	0	1	0	0	0	0	0	0	0	B1
		0	0	0	0	0	0	0	0	0	0	0	0	0	0	0	0	0	1	0	0	0	0	0	0	B2
		:	:	:	:	:	:			:	:	:	:	:	:			:	:	:	:	:	:			B3~ B252
	↓ LIGHT	:	:	:	:	:	:			:	:	:	:	:	:			:	:	:	:	:	:			
		0	0	0	0	0	0	0	0	0	0	0	0	0	0	0	0	1	0	1	1	1	1	1	1	B253
		0	0	0	0	0	0	0	0	0	0	0	0	0	0	0	0	0	1	1	1	1	1	1	1	B254
	BLUE	0	0	0	0	0	0	0	0	0	0	0	0	0	0	0	0	1	1	1	1	1	1	1	1	B255

Note) Definition of Gray :

Rn : Red Gray, Gn : Green Gray, Bn : Blue Gray (n = Gray level)

Input Signal : 0 = Low level voltage, 1 = High level voltage

5. Interface Timing

5.1 Timing Parameters (DE only mode)

SIGNAL	ITEM	SYMBOL	MIN.	TYP.	MAX.	Unit	NOTE
Clock	Frequency	$1/T_C$	130	148.5	155	MHz	-
Hsync		F_H	60	67.5	70	KHz	-
Vsync		F_V	48	60	62.5	Hz	-
Vertical Display Term	Active Display Period	T_{VD}	-	1080	-	Lines	-
	Vertical Total	T_V	1092	1125	1380	Lines	-
Horizontal Display Term	Active Display Period	T_{HD}	-	1920	-	Clocks	-
	Horizontal Total	T_H	2092	2200	2348	clocks	-

Note) This product is DE only mode. The input of Hsync & Vsync signal does not have an effect on normal operation.

(1) Test Point : TTL control signal and CLK at LVDS Tx input terminal in system

(2) Internal V_{DD} = 3.3V

(3) Spread spectrum

- Modulation rate (max) : ± 1.5 %
- Modulation Frequency : under 150 KHz

5.2 LVDS Input Data Characteristics

ITEM		SYMBOL	Min.	Typ.	Max.	UNIT	NOTE
Input Data Position	F_{IN}=85MHz	t_{RSRM}	-	-	400	ps	
		t_{RSLM}	-	-	400	ps	
Input common mode voltage		V_{CM}	0.2	1.2	2.0	V	-
Differential Input Voltage		$\|V_{ID}\|$	100	-	600	mV	-

Note) When the skew is measured the Spread Spectrum should be 0%

For eyes of General only

5.3 Timing diagrams of interface signal (DE only mode)

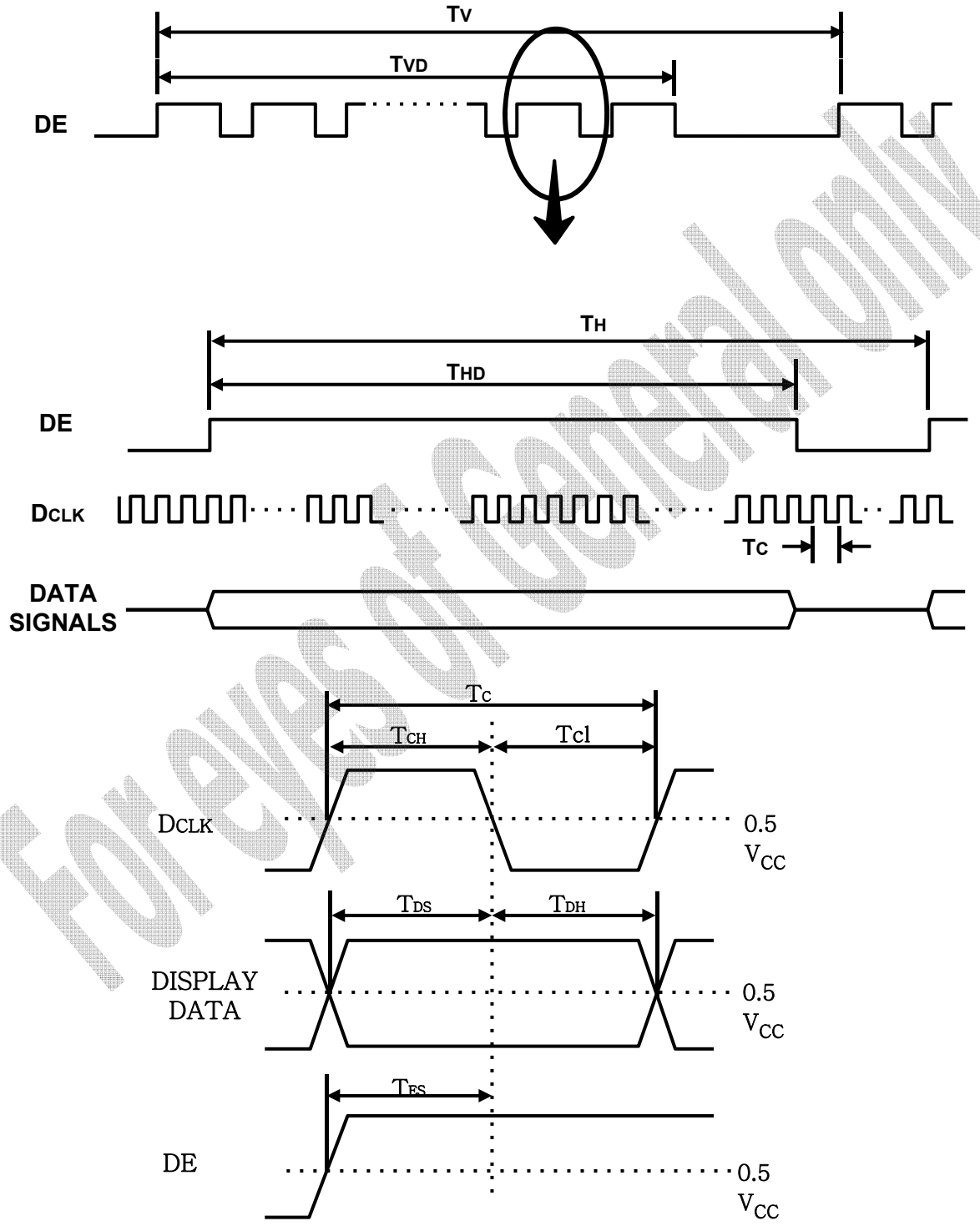

For eyes of General only

5.4 Power ON/OFF Sequence

To prevent a latch-up or DC operation of the LCD Module, the power on/off sequence should be as the diagram below.

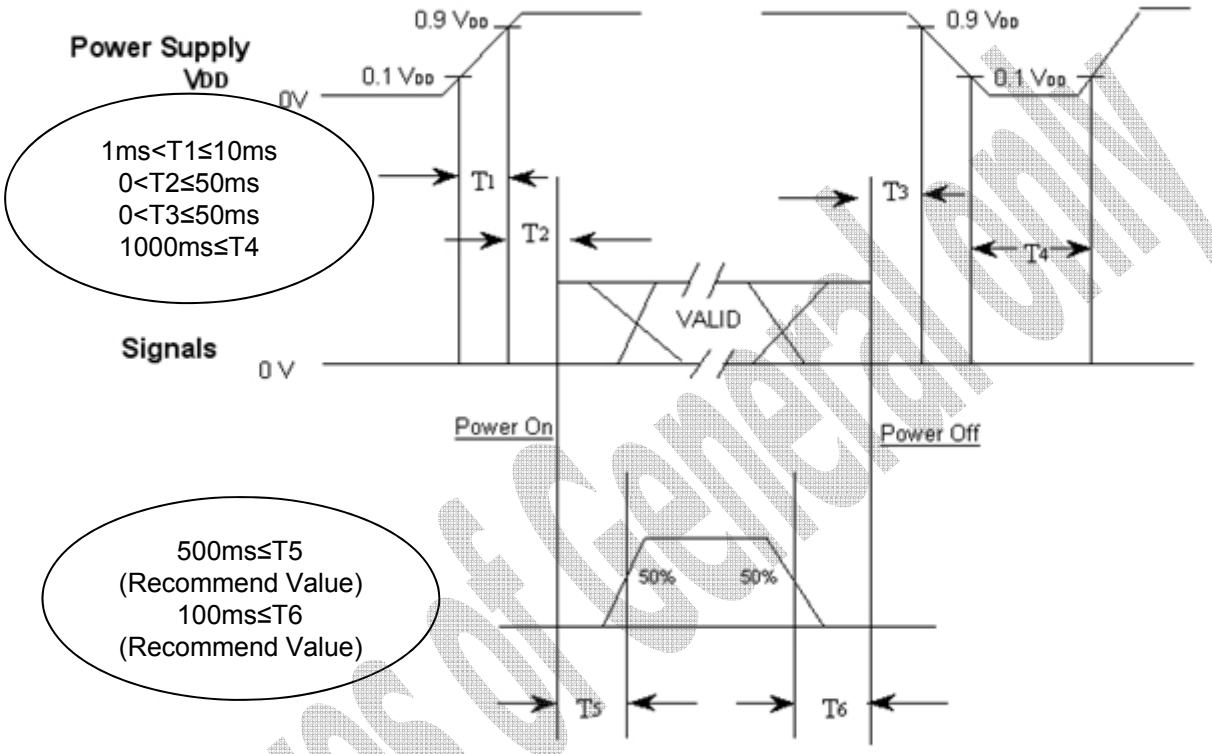

T1 : V_{DD} rising time from 10% to 90%
T2 : The time from V_{DD} to valid data at power ON.
T3 : The time from valid data off to V_{DD} off at power Off.
T4 : V_{DD} off time for Windows restart
T5 : The time from valid data to B/L enable at power ON.
T6 : The time from valid data off to B/L disable at power Off.

- The supply voltage of the external system for the Module input should be the same as the definition of V_{DD}.
- Apply the lamp voltage within the LCD operation range. When the back light turns on before the LCD operation or the LCD turns off before the back light turns off, the display may momentarily show abnormal screen.
- In case of V_{DD} = off level, please keep the level of input signals low or keep a high impedance.
- T4 should be measured after the Module has been fully discharged between power off and on period.
- Interface signal should not be kept at high impedance when the power is on.

Forms of Samsung

FILE NO.

NO	PART NAME	CODE NO	SPECIFICATION	Q'TY	WEIGHT		UNFOLDED DIM OR MATERIAL	REMARK
					FINISH	MATERIAL		
	OUTLINE DIMENSION(FRONT)		LTA460HM06 (60Hz)					

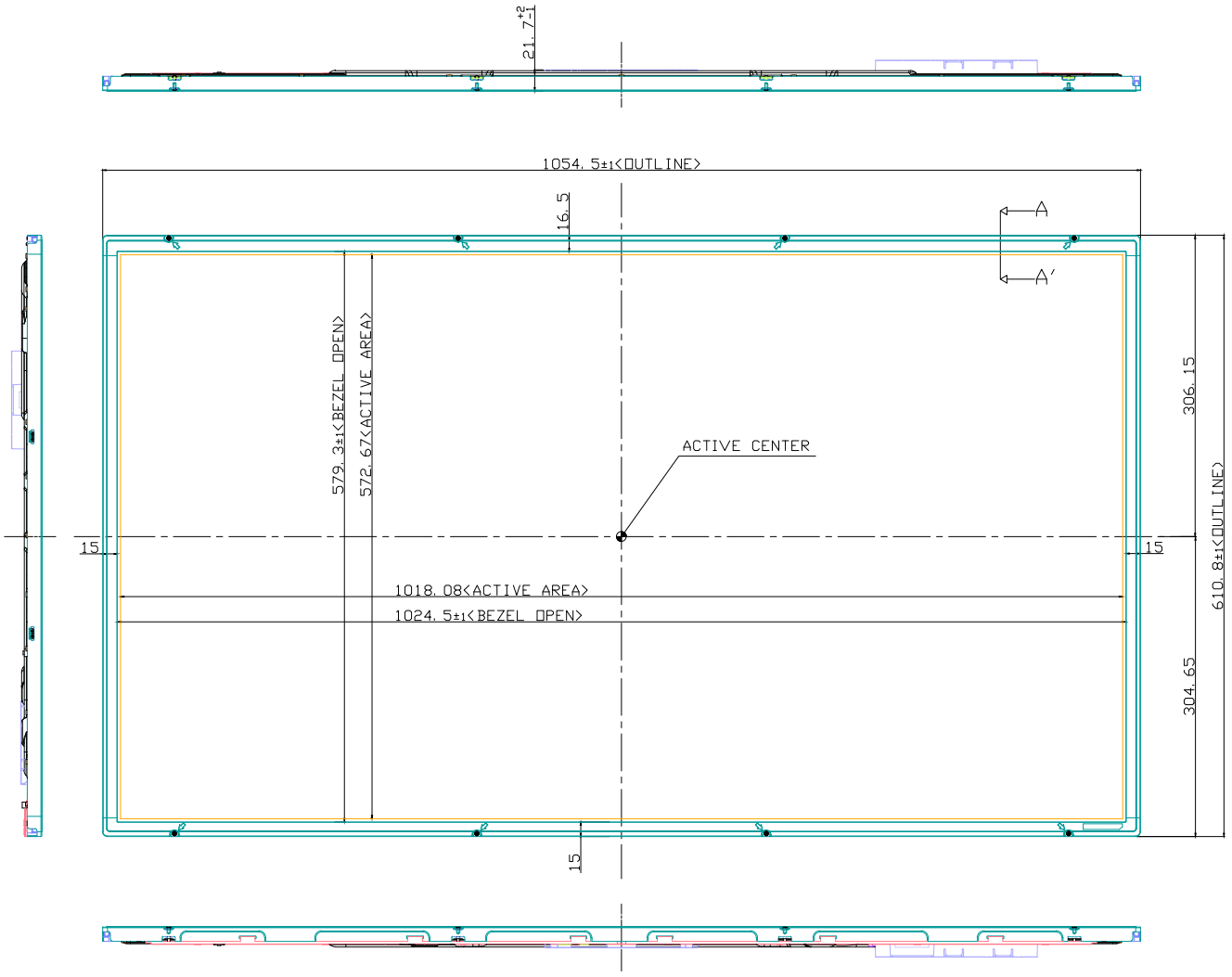

SECTION AA'

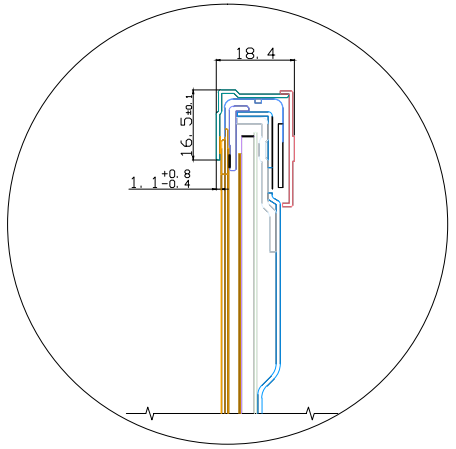

※ NOTE
1. BACKLIGHT : WLED
2. CONNECTOR SPECIFICATION
   - POWER CONNECTOR
     >. MAKER : YEONHO
     >. PART NO. : 20022WR-14B1
   - LVDS INPUT CONNECTOR(51PIN)
     >. MAKER : JAE/UUU
     >. PART NO. : FI-RE51S-HF
3. USERHOLE
   - TAP SIZE & TOLERANCE DESIGNED FOR GENERAL PURPOSE METRIC SCREW THREAD ACCORDING TO GENERAL GRADE OF "KS B 0211"
   - ALLOWD SCREW TORQUE
     >. M3 TAP : 8.0 kgf.cm MAX
     >. M4 TAP : 13.0 kgf.cm MAX
     >. M8 TAP : 25.0 kgf.cm MAX
   - REPEATED INSERTION WARRANTY : 5TIMES(SCREW)
4. WEIGHT : 9,500g(MAX)
5. BLACK MATRIX SPEC
   - |A - B| ≤ 2.0 ㎜
   - |C - D| ≤ 2.0 ㎜

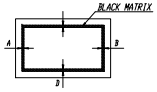

APPROVAL

GENERAL TOLERANCE			
STEP	LEVEL 1	LEVEL 2	LEVEL 3
0 < X ≤ 4	±0.05	±0.1	±0.2
4 < X ≤ 16	±0.08	±0.15	±0.3
16 < X ≤ 64	±0.12	±0.25	±0.5
64 < X ≤ 256	±0.25	±0.4	±0.8

REV	DATE	DESCRIPTION OF REVISION	REASON	CHG'D BY
UNIT	mm	DRA'N BY / DES'D BY / CHK'D BY / APP'D BY	MODEL NAME	LTA460HM06 (60Hz)
SCALE	N/S	S. Y. YUN / S. W. BAE	PART/SHEET NAME	OUTLINE DIMENSION(FRONT)
TOLERANCE	LEVEL 3	2011.02.09	SHEET	1/3
SAMSUNG ELECTRONICS		SPEC. NO	REV.	000
		CODE NO.		

FILE NO.

NO	PART NAME	CODE NO	SPECIFICATION	Q'TY	WEIGHT FINISH	WEIGHT MATERIAL	UNFOLDED DIM OF MATERIAL	REMARK
	OUTLINE DIMENSION(BACK)		LTA460HM06 (60Hz)					

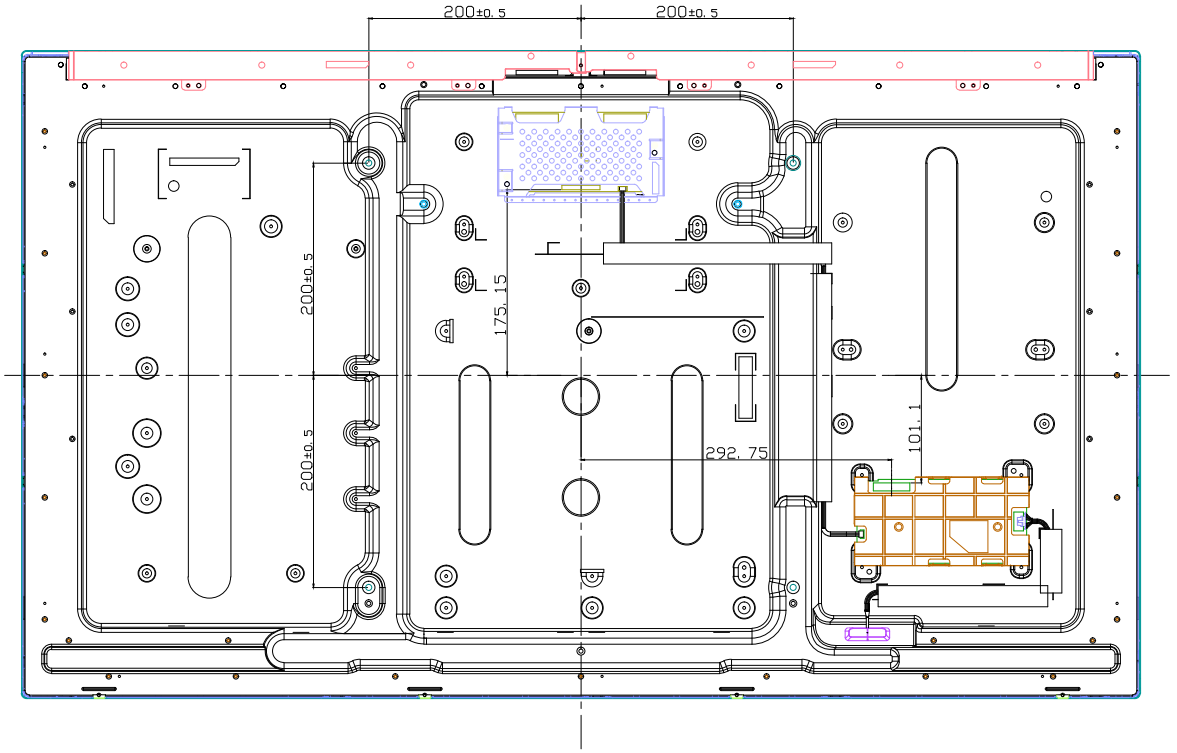

APPROVAL

GENERAL TOLERANCE			
STEP	LEVEL 1	LEVEL 2	LEVEL 3
0 < X ≤ 4	±0.05	±0.1	±0.2
4 < X ≤ 16	±0.08	±0.15	±0.3
16 < X ≤ 64	±0.12	±0.25	±0.5
64 < X ≤ 256	±0.25	±0.4	±0.8

REV	DATE	DESCRIPTION OF REVISION	REASON	CHG'D BY

UNIT	mm	DRA'N BY	DES'D BY	CHK'D BY	APP'D BY
SCALE	N/S	S. Y. YUN		S. W. BAE	
TOLERANCE LEVEL 3		2011.02.09			

SAMSUNG ELECTRONICS

SPEC. NO

MODEL NAME	LTA460HM06 (60Hz)
PART/SHEET NAME	OUTLINE DIMENSION(BACK) SHEET 2/3
CODE NO.	REV. 000

7. PACKING

7.1 CARTON (Internal Package)

(1) Packing Form

Corrugated fiberboard box and corrugated cardboard as shock absorber

(2) Packing Method

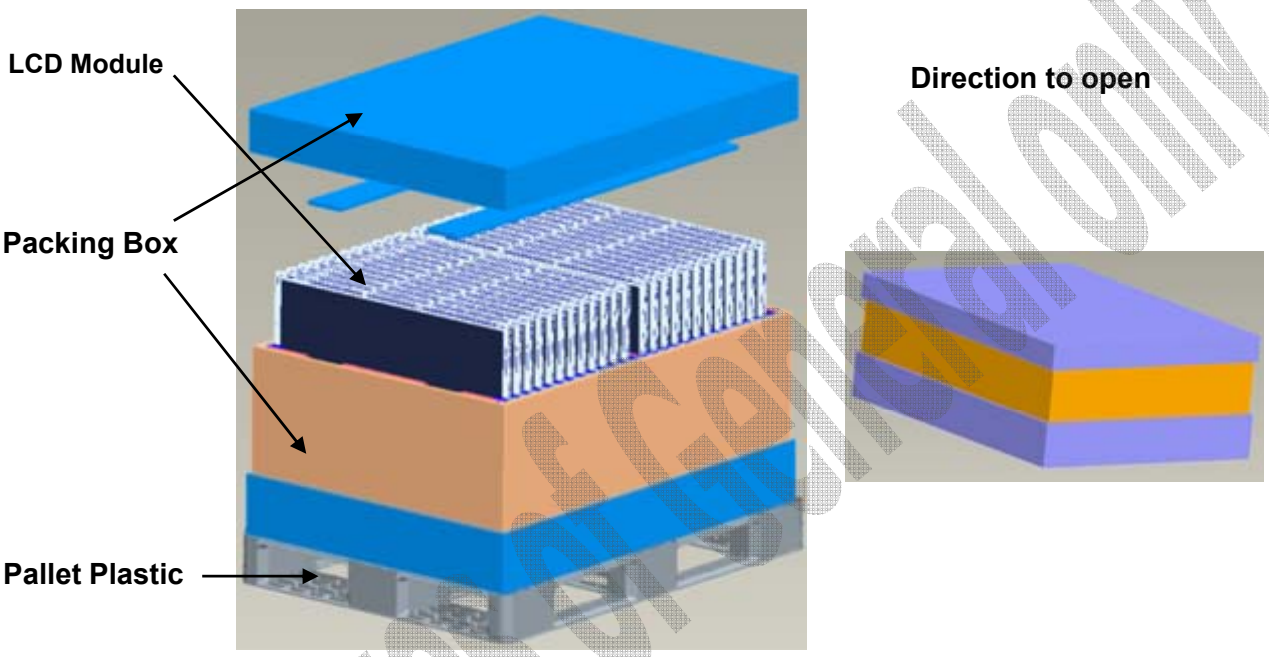

7.2 Packing Specification

Item	Specification	Remark
LCD Packing	22ea / (Paking Pallet Box)	1. 10.5 kg / LCD (1kg) 2. 12kg / Cushion- pallet (2ea) 3. 8kg / Packing pallet box (1ea) 4. Cushion pallet Material : paper 5. Packing pallet box material : DW4
Pallet	1Box / Pallet	1. Pallet weight = 8.8 kg
Packing Direction	Vertical	
Total Pallet Size	H x V x height	1270mm(H) x 1150mm(V) x 844mm(height)
Total Pallet Weight	259.8 kg	Pallet(8.8kg) + Module (168 kg) + Cushion (up + bottom =12kg) + Pallet-BOX(8kg)

For eyes of Samsung only

8. MARKING & OTHERS

A nameplate bearing followed by is affixed to a shipped product at the specified location on each product.

(1) Part number : LTA460HM06
(2) Revision: Three letters
(3) Lot number : X X X X XXX XX X

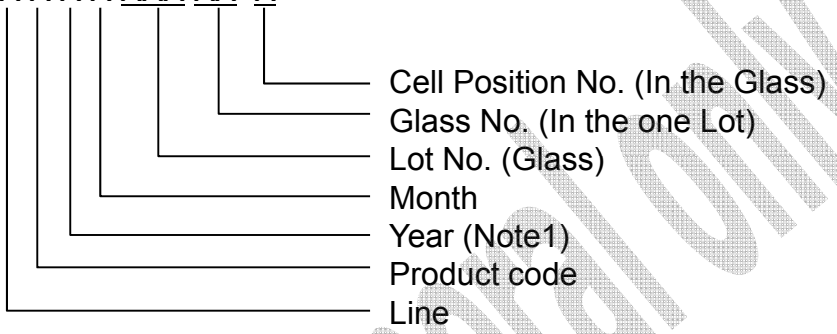

(4) Nameplate Indication

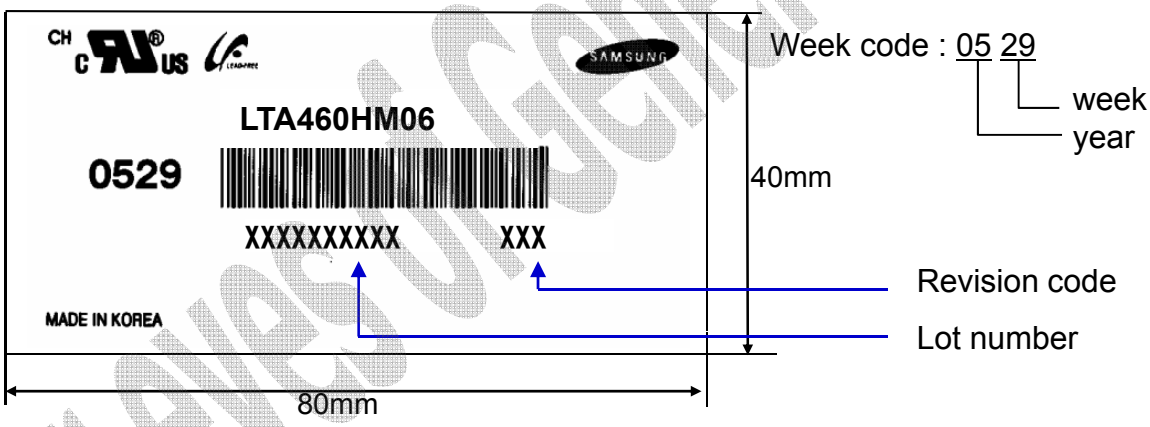

(5) Packing box attach

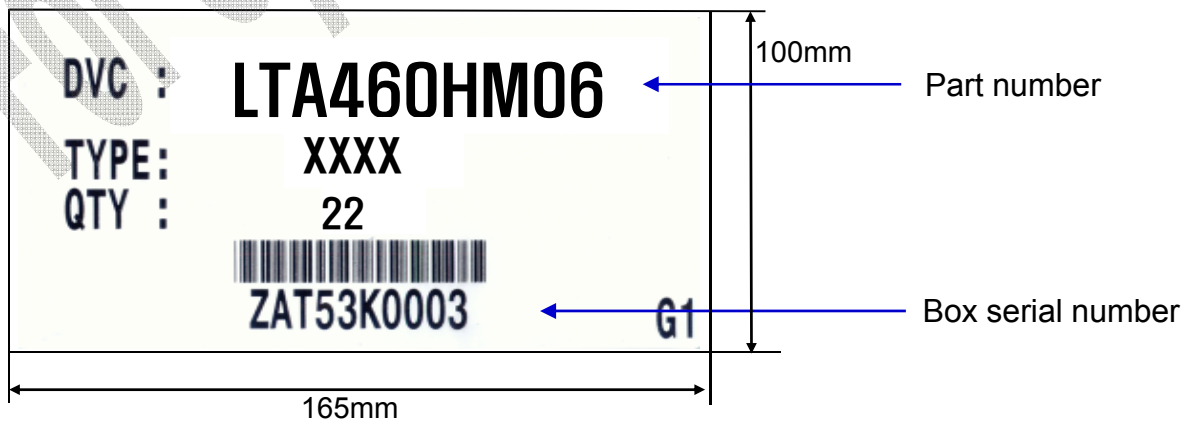

(6) Others

1. After service part
   Lamps cannot be replaced because of the narrow bezel structure.

For SAMSUNG Internal Only

9. General Precautions

9.1 Handling

(a) When the Module is assembled, it should be attached to the system firmly using all mounting holes. Be careful not to twist and bend the Module.

(b) Because the inverter use high voltage, it should be disconnected from power before it is assembled or disassembled.

(c) Refrain from strong mechanical shock and / or any force to the Module. In addition to damage, this may cause improper operation or damage to the Module and CCFL back light.

(d) Note that polarizers are very fragile and could be damage easily. Do not press or scratch the surface harder than a HB pencil lead.

(e) Wipe off water droplets or oil immediately. If you leave the droplets for a long time, staining or discoloration may occur.

(f) If the surface of the polarizer is dirty, clean it using absorbent cotton or soft cloth.

(g) Desirable cleaners are water, IPA (Isopropyl Alcohol) or Hexane. Do not use ketone type materials (ex. Acetone), Ethyl alcohol, Toluene, Ethyl acid or Methyl chloride. It might permanent damage to the polarizer due to chemical reaction.

(h) If the liquid crystal material leaks from the panel, it should be kept away from the eyes or mouth . In case of contact with hands, legs or clothes, it must be washed away with soap thoroughly.

(i) Protect the module from Electrostatic discharge. Otherwise the ASIC IC or Semiconductor would be damaged.

(j) Use finger-stalls with soft gloves in order to keep display clean during the incoming inspection and assembly process.

(k) Do not disassemble the Module.

(l) Do not disassemble shield case of inverter & LVDS board.

(m) Do not connect N.C pins. (Samsung internal use only)

(n) Protection film for polarizer on the Module should be slowly peeled off just before use so that the electrostatic charge can be minimized. Must put on antistatic glove while handle a module

(o) Pins of I/F connector should not be touched directly with bare hands.

For Buyer's Internal Only

9.2 Storage

(a) Do not leave the module in high temperature, and high humidity for a long time. It is highly recommended to store the module with temperature from 5 to 40 C and relative humidity of less than 70%.
(b) Do not store the TFT-LCD module in direct sunlight.
(c) The module shall be stored in a dark place. It is prohibited to apply sunlight or fluorescent light during the store.
(d) Storage condition of Packing

ITEM	UNIT	Min.	Max.
Storage Temperature	(℃)	5	40
Storage Humidity	(%rH)	35	75
Storage Life	12 months		
Storage Condition	-Prohibit direct sunlight -Ventilation in storehouse and control changing temperature is within limits of environment -Put it on pallet and store them with removing from wall. -Don't wet Out-BOX and avoid rain. -Without condensation. -Etc. Avoid harmful Condition		
Long-term Storage Process	-More than 3 months Storage or Low temp. Delivery/under 5℃storage →On the 20℃,50%rH Condition, more than 10hr release.		

9.3 Operation

(a) Do not connect or disconnect the Module in the "Power On" condition.

(b) Power supply should always be turned on/off by the "Power on/off sequence"

(c) Module has high frequency circuits. Sufficient suppression to the electromagnetic interference should be done by system manufacturers. Grounding and shielding methods may be important to minimize the interference.

(d) The cable between the back light connector and its inverter power supply should be connected directly with a minimized length. A longer cable between the back light and the inverter may cause lower luminance of lamp(CCFT) and may require higher startup voltage(Vs).

For eyes on Samsung only

9.4 Operation Condition Guide

(a) The LCD product should be operated under normal conditions.
Normal condition is defined as below;
- Temperature : 20±15℃
- Humidity : 55±20%
- Display pattern : continually changing pattern (Not stationary)

(b) If the product will be used in extreme conditions such as high temperature, humidity, display patterns or operation time etc.., It is strongly recommended to contact SEC for Application engineering advice. Otherwise, its reliability and function may not be guaranteed. Extreme conditions are commonly found at Airports, Transit Stations, Banks, Stock market, and Controlling systems.

9.5 Others

(a) Ultra-violet ray filter is necessary for outdoor operation.

(b) Avoid condensation of water. It may result in improper operation or disconnection of electrode.

(c) Do not exceed the absolute maximum rating value. (supply voltage variation, input voltage variation, variation in part contents and environmental temperature, and so on)
Otherwise the Module may be damaged.

(d) If the Module keeps displaying the same pattern for a long period of time, the image may be "sticked" to the screen.
To avoid image sticking, it is recommended to use a screen saver.

(e) This Module has its circuitry PCB's on the rear side and should be handled carefully in order not to be stressed.

(f) Please contact SEC in advance when you display the same pattern for a long time.

For Files of General Only