SAMSUNG ELECTRONICS

Approval

LEAD-FREE

TO :

DATE : June. 25. 2010

SAMSUNG TFT-LCD

MODEL NO : LTN156AT02-

NOTE : Extension code [-]
→ LTN156AT02-
Surface type [Glare, True life]

The information described in this SPEC is preliminary and can be changed without prior notice.

Application engineering part, Mobile Division
Samsung Electronics Co., Ltd.

Samsung Secret

오학송06303588응용기술1파트(LCD)1292122139 20100625164722

031261277451760

Approval

CONTENTS

Revision History ----------(3)

General Description ----------(4)

1. Absolute Maximum Ratings ----------(5)
   1.1 Absolute Ratings of environment
   1.2 Electrical Absolute Ratings

2. Optical Characteristics ----------(7)

3. Electrical Characteristics ----------(10)
   3.1 TFT LCD Module
   3.2 Backlight Unit
   3.3 LED Driver

4. Block Diagram ----------(13)
   4.1 TFT LCD Module

5. Input Terminal Pin Assignment ----------(14)
   5.1 Input Signal & Power
   5.2 LVDS Interface
   5.3 Timing Diagrams of LVDS For Transmitting
   5.4 Input Signals, Basic Display Colors and Gray Scale of Each Color.
   5.5 Pixel format

6. Interface Timing ----------(19)
   6.1 Timing Parameters
   6.2 Timing Diagrams of interface Signal
   6.3 Power ON/OFF Sequence

7. Outline Dimension ----------(21)

8. Packing ----------(22)

9. Markings & Others ----------(23)

10. General Precautions ----------(25)

11. EDID ----------(28)

Samsung Secret

오학송06303588응용기술1파트(LCD)1292122139 20100625164722

031261277451760

REVISION HISTORY

Approval

Date	Revision No.	Page	Summary
June. 25. 2010	A00	All	LTN156AT02- model spec was issued first.

Samsung Secret

오학송06303588응용기술1파트(LCD)1292122139 20100625164722

031261277451760

GENERAL DESCRIPTION

DESCRIPTION

LTN156AT02- is a color active matrix TFT (Thin Film Transistor) liquid crystal display (LCD) that uses amorphous silicon TFT as switching devices. This model is composed of a TFT LCD panel, a driver circuit and a backlight system. The resolution of a 15.6" contains 1366 x 768 pixels and can display up to 262,144 colors. 6 O'clock direction is the Optimum viewing angle.

FEATURES

- Thin and light weight
- High contrast ratio, high aperture structure
- 1366 x 768 pixels resolution (16:9)
- Fast Response Time
- Low power consumption
- LED BLU Structure
- DE (Data enable) only mode
- 3.3V LVDS Interface
- On board EDID chip
- Pb-free product

APPLICATIONS

- Notebook PC
- If the usage of this product is not for PC application, but for others, please contact SEC

GENERAL INFORMATION

Item	Specification	Unit	Note
Display area	344.232 (H) x 193.536 (V) (15.6”diagonal)	mm	
Driver element	a-Si TFT active matrix		
Display colors	262,144		
Number of pixel	1366 x 768	pixel	16 : 9
Pixel arrangement	RGB vertical stripe		
Pixel pitch	0.252 (H) x 0.252 (V) (TYP.)	mm	
Display Mode	Normally white		
Surface treatment	Haze 0, Hardness 3H		Glare

오학송06303588응용기술1파트(LCD)1292122139 20100625164722

031261277451760

Mechanical Information

Item		Min.	Typ.	Max.	Unit	Note
Module size	Horizontal (H)	358.8	359.3	359.8	mm	
	Vertical (V)	209.0	209.5	210	mm	
	Depth (D)	-	-	5.5	mm	(1)
Weight		-	-	450	g	

Note (1) Measurement condition of outline dimension
. Equipment : Vernier Calipers
. Push Force : 500g ·f (minimum)

1. ABSOLUTE MAXIMUM RATINGS

1.1 ENVIRONMENTAL ABSOLUTE RATINGS

Item	Symbol	Min.	Max.	Unit	Note
Storage temperate	TSTG	-20	60	°C	(1)
Operating temperate (Temperature of glass surface)	TOPR	0	50	°C	(1)
Shock (non-operating)	Snop	-	240	G	(2),(4)
Vibration (non-operating)	Vnop	-	2.41	G	(3),(4)

Note (1) Temperature and relative humidity range are shown in the figure below.
95 % RH Max. (40 °C ≥ Ta)
Maximum wet - bulb temperature at 39 °C or less. (Ta > 40 °C) No condensation

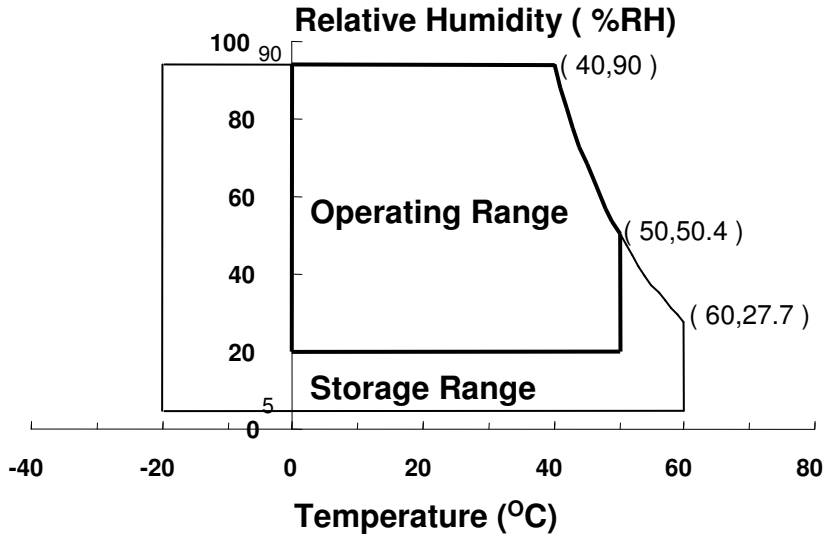

(2) 2ms, half sine wave, one time for ±X, ±Y, ± Z.
(3) 5 - 500 Hz, random vibration, 30min for X, Y, Z.
(4) At testing Vibration and Shock, the fixture in holding the Module to be tested have to be hard and rigid enough so that the Module would not be twisted or bent by the fixture.

Samsung Secret

오학송06303588응용기술1파트(LCD)1292122139 20100625164722
031261277451760

1.2 ELECTRICAL ABSOLUTE RATINGS

(1) TFT LCD MODULE

V_{DD} =3.3V, V_{SS} = GND = 0V

Item	Symbol	Min.	Max.	Unit	Note
Power Supply Voltage	V_{DD}	V_{DD} – 0.3	V_{DD} + 0.3	V	(1)
Logic Input Voltage	V_{DD}	V_{DD} – 0.3	V_{DD} + 0.3	V	(1)

Note (1) Within Ta (25 ± 2 °C)

오학송06303588응용기술1파트(LCD)1292122139 20100625164722

031261277451760

2. OPTICAL CHARACTERISTICS

The following items are measured under stable conditions. The optical characteristics should be measured in a dark room or equivalent state with the methods shown in Note (5). Measuring equipment : TOPCON SR-3

* Ta = 25 ± 2 °C, V_{DD}=3.3V, fv= 60Hz, f_{DCLK} = 72.33 MHz, I_L = 20 mA

Item		Symbol	Condition	Min.	Typ.	Max	Unit	Note
Contrast Ratio (5 Points)		CR	Normal Viewing Angle $\phi = 0$ $\theta = 0$	500	600	-	-	(1), (2), (5)
Response Time at Ta (Rising + Falling)		T_{RT}		-	25	35	msec	(1), (3)
Average Luminance of White (5 Points)		$Y_{L,AVE}$		200	220	-	cd/m^2	I_L=19mA (1), (4)
Color Chromaticity (CIE)	Red	R_X		0.590	0.620	0.650	-	
		R_Y		0.310	0.340	0.370		
	Green	G_X		0.300	0.330	0.360		
		G_Y		0.540	0.570	0.600		
	Blue	B_X		0.120	0.150	0.180		
		B_Y		0.030	0.060	0.090		
	White	W_X		0.283	0.313	0.343		
		W_Y		0.299	0.329	0.359		
Viewing Angle	Hor.	θ_L	CR ≥ 10	40	-	-	Degrees	(1), (5) SR-3
		θ_R		40	-	-		
	Ver.	ϕ_H		15	-	-		
		ϕ_L		30	-	-		
Color Gamut				-	60	-	%	
13 Points White Variation		δ_L		-	-	1.7	-	(6)

Samsung Secret

오학송06303588응용기술1파트(LCD)1292122139 20100625164722

031261277451760

Note 1) Definition of Viewing Angle : Viewing angle range(10 ≤ C/R)

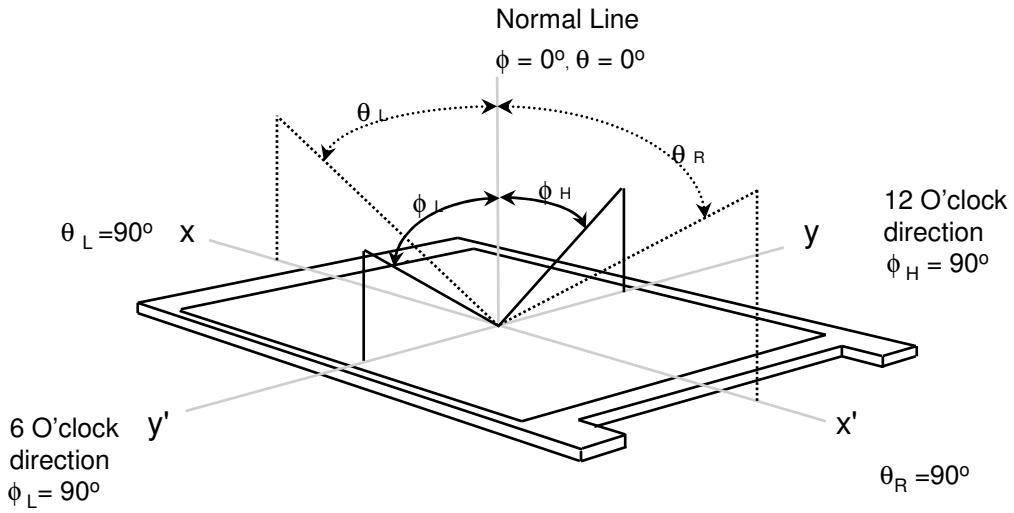

Note 2) Definition of Contrast Ratio (CR) : Ratio of gray max (Gmax) ,gray min (Gmin) at 5 points (33, 55, 77, 37, 73)

$$CR = \frac{CR(33) + CR(55) + CR(77) + CR(37) + CR(73)}{5}$$

Points : 33, 55, 77, 37, 73 at the figure of Note (6).

Note 3) Definition of Response time :

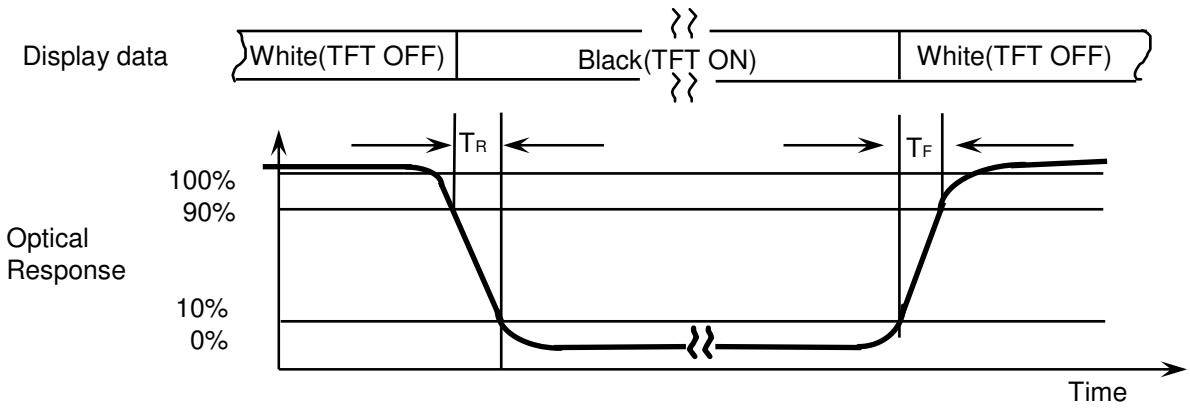

Note 4) Definition of Average Luminance of White : measure the luminance of white at 5 points.

Average Luminance of White ($Y_{L,AVE}$)

$$Y_{L,AVE} = \frac{Y_{L33} + Y_{L55} + Y_{L77} + Y_{L37} + Y_{L73}}{5}$$

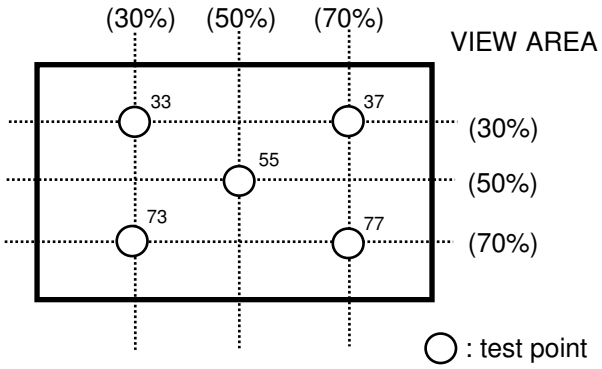

Samsung Secret

오학송06303588응용기술1파트(LCD)1292122139 20100625164722

031261277451760

Note 5) After stabilizing and leaving the panel alone at a given temperature for 30 min , the measurement should be executed. Measurement should be executed in a stable, windless,and dark room.
30 min after lighting the backlight. This should be measured in the center of screen.
LED current : 20 mA
Environment condition : Ta = 25 ± 2 °C

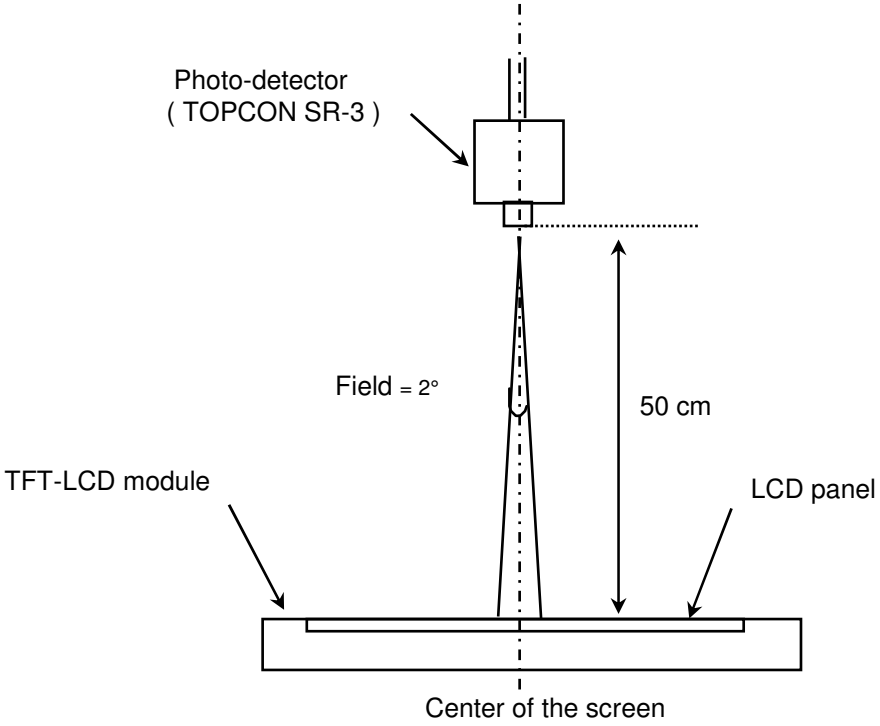

[Optical characteristics measurement setup]

Note 6) Definition of 13 points white variation (δ_L), [11 ~ 99]

$$\delta_L = \frac{\text{Maximum luminance of 13 points}}{\text{Minimum luminance of 13 points}}$$

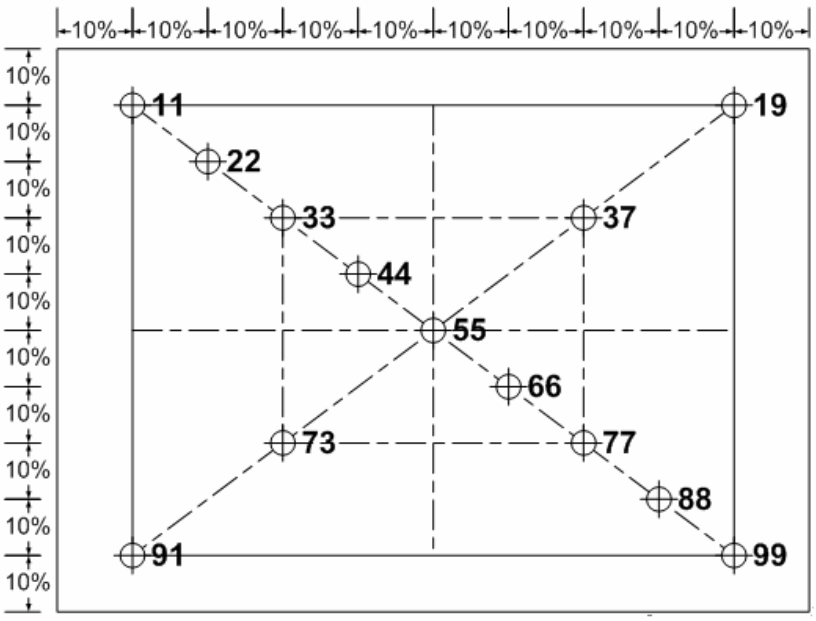

○ : test point

Samsung Secret

오학송06303588응용기술1파트(LCD)1292122139 20100625164722
031261277451760

3. ELECTRICAL CHARACTERISTICS

3.1 TFT LCD MODULE

Ta= 25 ± 2°C

Item		Symbol	Min.	Typ.	Max.	Unit	Note
Voltage of Power Supply		V_{DD}	3.0	3.3	3.6	V	
Differential Input Voltage for LVDS Receiver Threshold	High	V_{IH}	-	-	+100	mV	V_{CM} = +1.2V
	Low	V_{IL}	-100	-	-	mV	
Vsync Frequency		fv	-	60	-	Hz	
Hsync Frequency		f_H	-	47.40	-	KHz	
Main Frequency		f_{DCLK}	-	72.33	-	MHz	
Rush Current		I_{RUSH}	-	-	1.5	A	(4)
Current of Power Supply	White	I_{DD}	-	360	-	mA	(2),(3)*a
	Mosaic		-	420	-	mA	(2),(3)*b
	V. Stripe		-	530	600	mA	(2),(3)*c

Note (1) Display data pins and timing signal pins should be connected.(GND = 0V)

(2) f_V = 60Hz, f_{DCLK} = 72.33 MHZ, V_{DD} = 3.3V , DC Current.

(3) Power dissipation pattern

*a) White Pattern

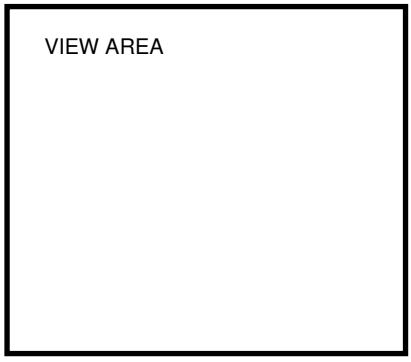

*b) Mosaic Pattern

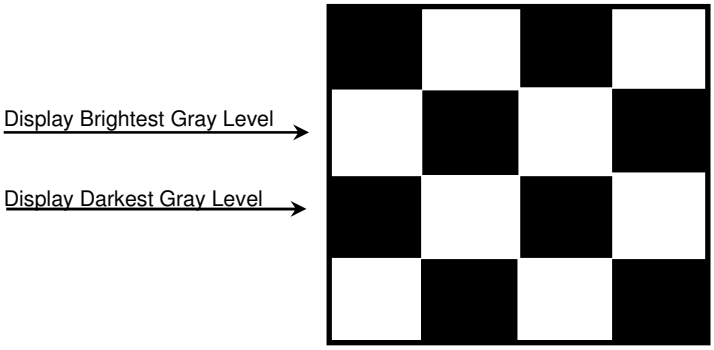

Samsung Secret

오학송06303588응용기술1파트(LCD)1292122139 20100625164722

031261277451760

*c) 1dot Vertical stripe pattern

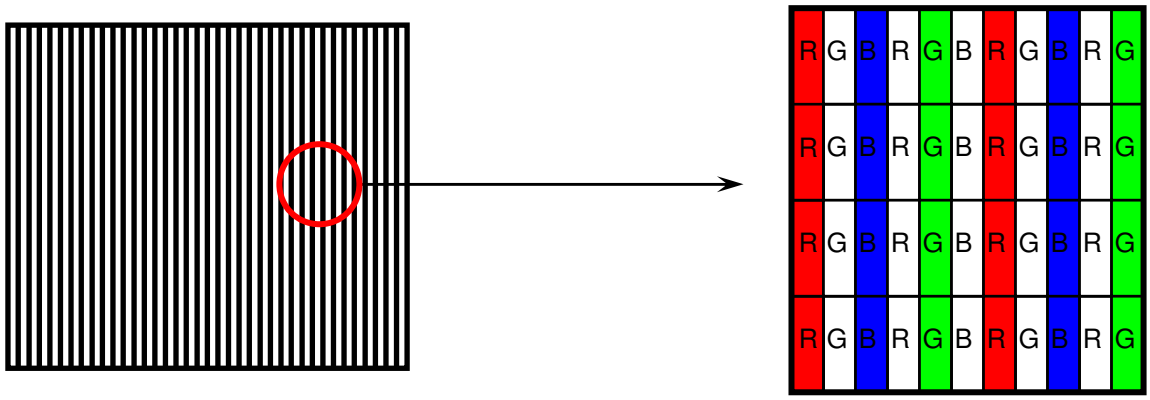

4) Rush current measurement condition

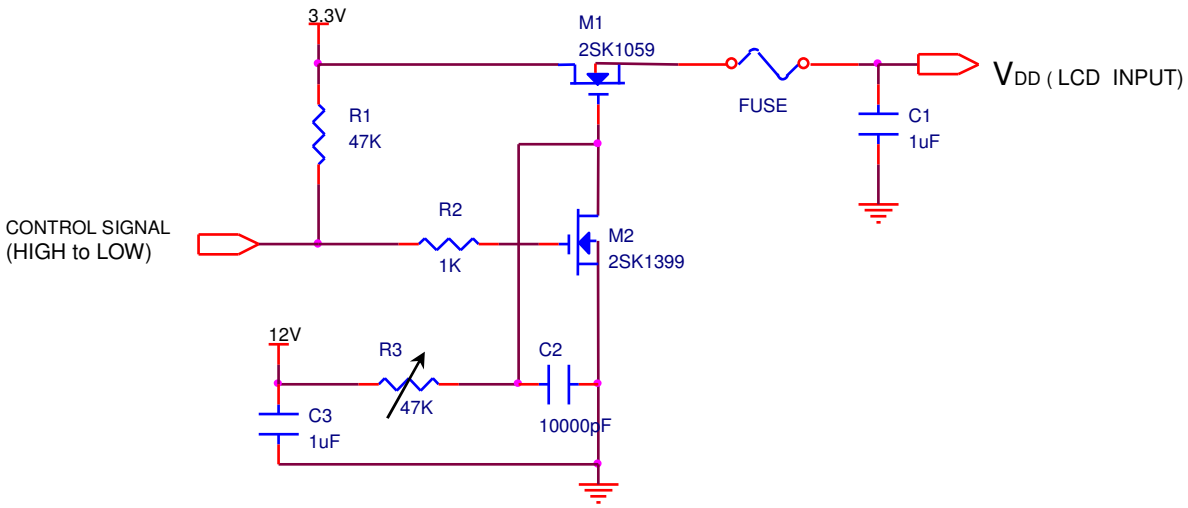

VDD rising time is 470us

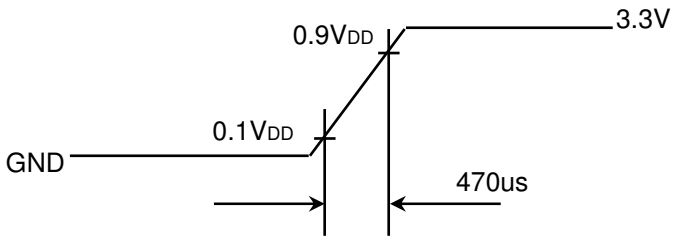

오학송06303588응용기술1파트(LCD)1292122139 20100625164722

031261277451760

3.2 BACK-LIGHT UNIT

Ta= 25 ± 2 °C

Item	Symbol	Min.	Typ.	Max.	Unit	Note
LED Forward Current	IF	-	20	-	mA	
LED Forward Voltage	VF	3.0	-	3.4	V	
LED Array Voltage	VP	24	-	27.2	V	VF X 8 LEDs
Power Consumption	P	2.88	-	3.26	W	IF X VF X 48 LEDs (w/o Converter)

3.3 LED Driver

- LED Driver Manufacturer : ST Micro

Ta= 25 ± 2 °C

Item	Symbol	Min.	Typ.	Max.	Unit	Note
Input Voltage	V_{in}	4.7	-	28	V	
Input Current	I	-	2A RMS 5A Peak	-	mA	Max.MOSFET curent in PM6600
Input Power	P_{in}	-	-	-	W	
Operating Frequency	F_o	200KHz	660KHz	1MHz	MHz	600KHz Possible
Output PWM Frequency	F_{PWM}	-	-	-	kHz	No output PWM
Burst Ratio	D	1	-	100	%	PWM freq : 200Hz~20KHz
External PWM Dimming Control Frequency (BLIM)	F_{BLIM}	200Hz	-	20KHz	kHz	Vin=8~21V, BLIM=PWM 0V~3.3V
Output Power	Pout	-	-	2.3	W	BLIM=100%
Efficiency	η	88	-	94	%	(Generally, Efficiency can be defined depends on Duty cycle , Vin and Dimming Freq.)

Note - Test Equipment : Fluke 45

오학송06303588응용기술1파트(LCD)1292122139 20100625164722

031261277451760

4. BLOCK DIAGRAM

4.1 TFT LCD Module

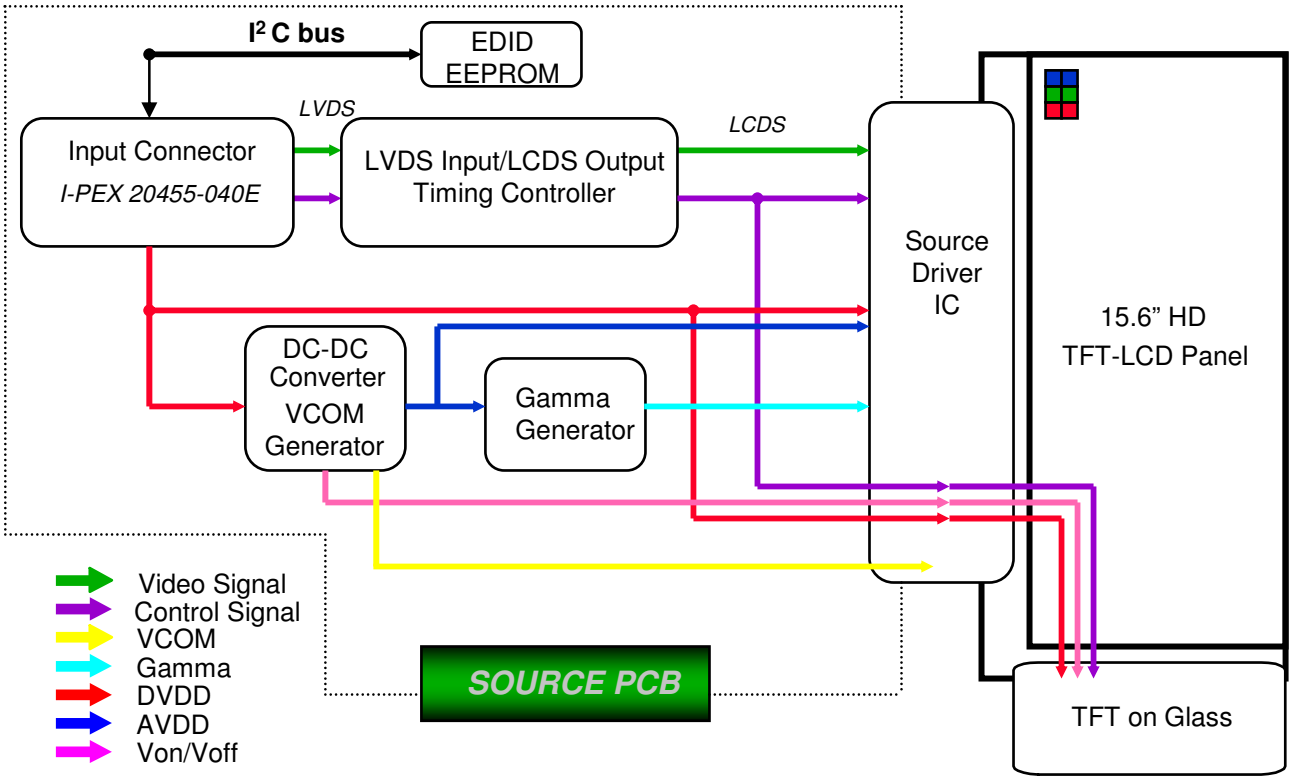

4.2 LED connection and placement

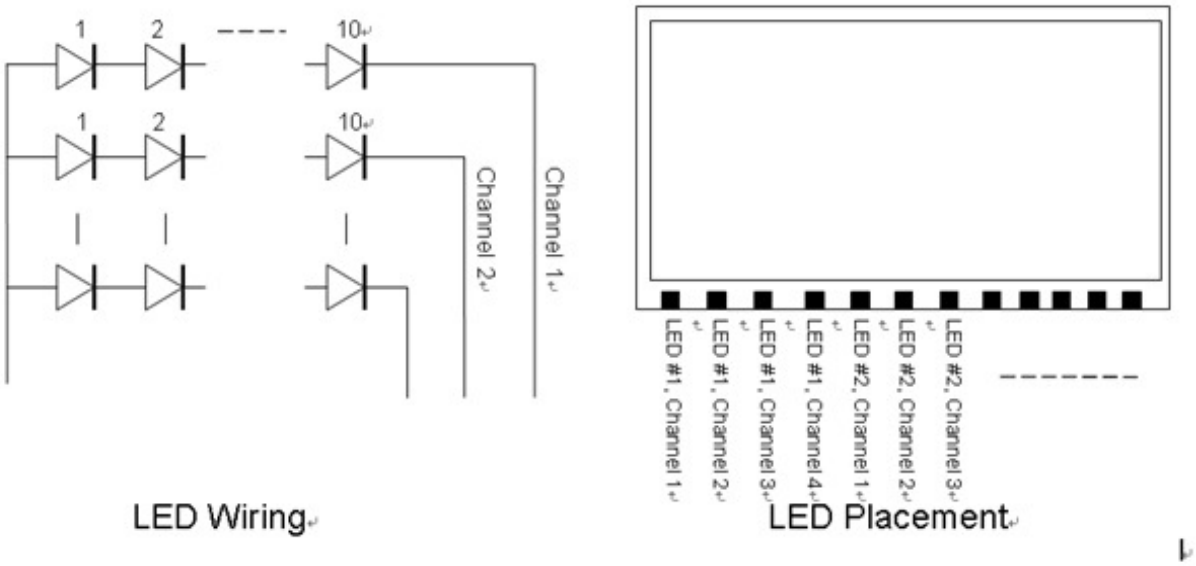

LED Wiring

LED Placement

오학송06303588응용기술1파트(LCD)1292122139 20100625164722

031261277451760

5. INPUT TERMINAL PIN ASSIGNMENT

5.1. Input Signal & Power (LVDS, Connector : I-PEX 20455-040E)

PIN #	Symbol	Description
1	DIAG_LOOP	Diag pin for Dell testing. Pin 1 & 34 must be connected
2	VDD	Power Supply, 3.3 V (typical)
3	VDD	Power Supply, 3.3 V (typical)
4	V EEDID	DDC 3.3V power
5	TEST	Panel Self Test
6	Clk EEDID	DDC Clock
7	DATA EEDID	DDC Data
8	Odd_Rin0-	- LVDS differential data input (R0-R5, G0) (odd pixels)
9	Odd_Rin0+	+ LVDS differential data input (R0-R5, G0) (odd pixels)
10	VSS	Ground – Shield
11	Odd_Rin1-	- LVDS differential data input (G1-G5, B0-B1) (odd pixels)
12	Odd_Rin1+	+ LVDS differential data input (G1-G5, B0-B1) (odd pixels)
13	VSS	Ground – Shield
14	Odd_Rin2-	- LVDS differential data input (B2-B5, HS, VS, DE) (odd pixels)
15	Odd_Rin2+	+ LVDS differential data input (B2-B5, HS, VS, DE) (odd pixels)
16	VSS	Ground – Shield
17	Odd_ClkIN-	- LVDS differential clock input (odd pixels)
18	Odd_ClkIN+	+ LVDS differential clock input (odd pixels)
19	NC	No connection
20	NC	No connection
21	NC	No connection
22	NC	No connection
23	NC	No connection
24	NC	No connection
25	NC	No connection

오학송06303588응용기술1파트(LCD)1292122139 20100625164722

031261277451760

5. INPUT TERMINAL PIN ASSIGNMENT

5.1. Input Signal & Power (LVDS, Connector : I-PEX 20455-040E)

PIN #	Symbol	Description
26	NC	No connection
27	NC	No connection
28	NC	No connection
29	NC	No connection
30	NC	No connection
31	VSSLED	Ground – LED
32	VSSLED	Ground – LED
33	VSSLED	Ground – LED
34	DIAG_LOOP	Diag pin for Dell testing. Pin 1 & 34 must be connected
35	PWM	System PWM Signal Input (+3.3V Swing)
36	LED_EN	LED enable pin (+3.3V Input)
37	NC	NC
38	VDDLED	7.5V – 21V LED power
39	VDDLED	7.5V – 21V LED power
40	VDDLED	7.5V – 21V LED power

오학송06303588응용기술1파트(LCD)1292122139 20100625164722

031261277451760

5.2 LVDS Interface : Transmitter DS90CF363 or Compatible

Pin No.	Name	RGB Signal	Pin No.	Name	RGB Signal
51	TxIN0	R0	14	TxIN14	G5
52	TxIN1	R1	15	TxIN15	B0
54	TxIN2	R2	19	TxIN18	B1
55	TxIN3	R3	20	TxIN19	B2
56	TxIN4	R4	22	TxIN20	B3
3	TxIN6	R5	23	TxIN21	B4
4	TxIN7	G0	24	TxIN22	B5
6	TxIN8	G1	27	TxIN24	Hsync
7	TxIN9	G2	28	TxIN25	Vsync
11	TxIN12	G3	30	TxIN26	DE
12	TxIN13	G4	31	TxCLKIN	Clock

LVDS INTERFACE

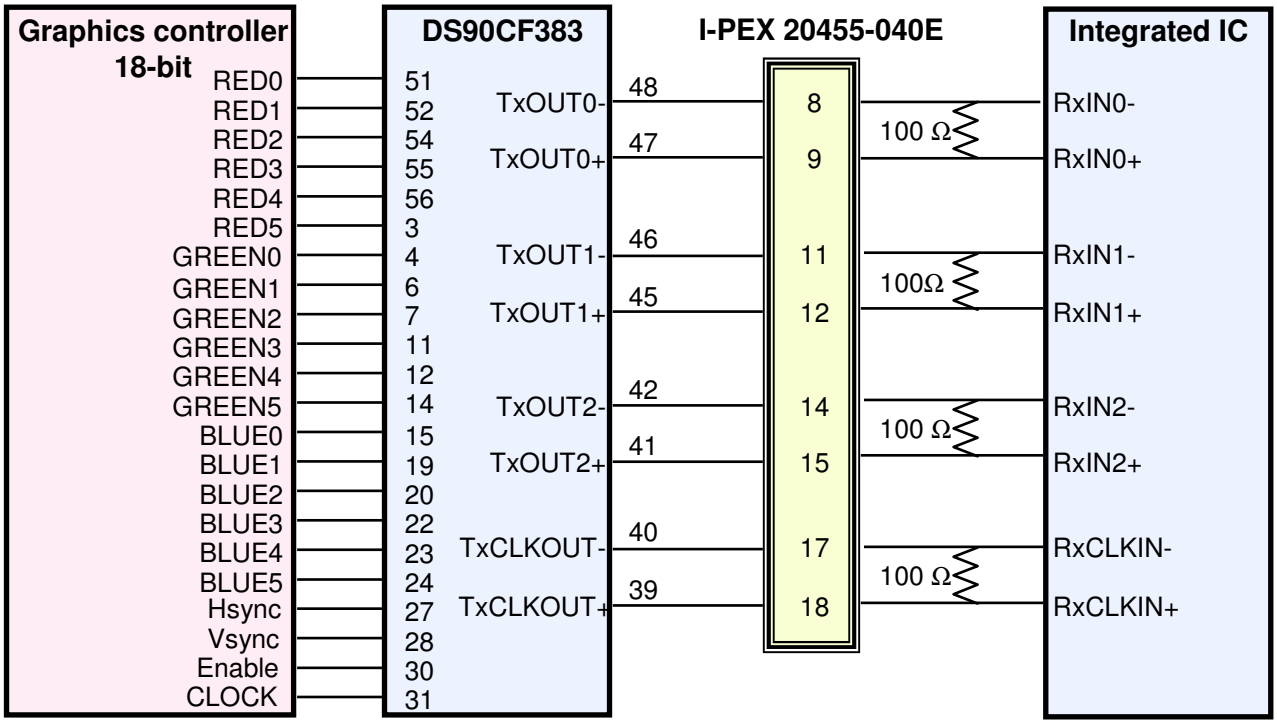

Note : The LCD Module uses a 100ohm resistor between positive and negative lines of each receiver input.

Samsung Secret

오학송06303588응용기술1파트(LCD)1292122139 20100625164722

031261277451760

5.3 Timing Diagrams of LVDS For Transmission

LVDS Receiver : Integrated T-CON

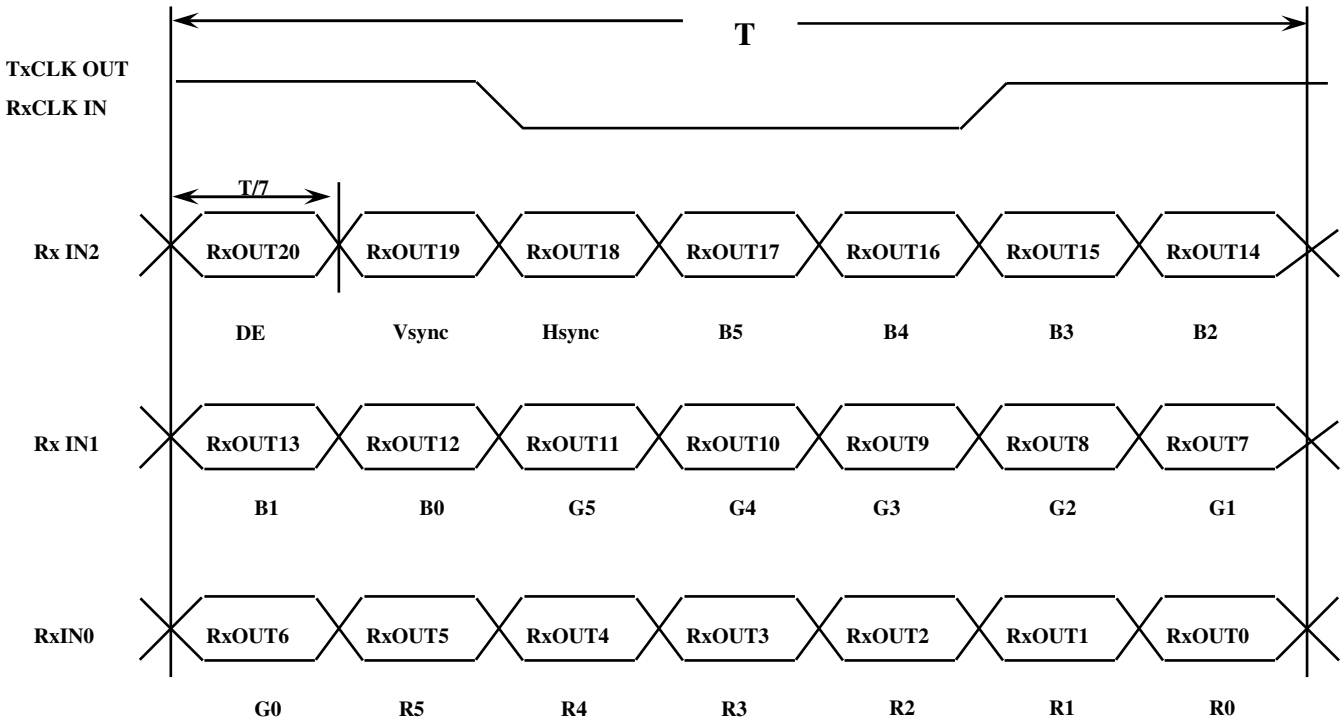

Samsung Secret

오학송06303588응용기술1파트(LCD)1292122139 20100625164722

031261277451760

5.4 Input Signals, Basic Display Colors and Gray Scale of Each Color

Color	Display	Data Signal																		Gray Scale Level
		Red						Green						Blue						
		R0	R1	R2	R3	R4	R5	G0	G1	G2	G3	G4	G5	B0	B1	B2	B3	45	B5	
Basic Colors	Black	0	0	0	0	0	0	0	0	0	0	0	0	0	0	0	0	0	0	-
	Blue	0	0	0	0	0	0	0	0	0	0	0	0	1	1	1	1	1	1	-
	Green	0	0	0	0	0	0	1	1	1	1	1	1	0	0	0	0	0	0	-
	Cyan	0	0	0	0	0	0	1	1	1	1	1	1	1	1	1	1	1	1	-
	Red	1	1	1	1	1	1	0	0	0	0	0	0	0	0	0	0	0	0	-
	Magenta	1	1	1	1	1	1	0	0	0	0	0	0	1	1	1	1	1	1	-
	Yellow	1	1	1	1	1	1	1	1	1	1	1	1	0	0	0	0	0	0	-
	White	1	1	1	1	1	1	1	1	1	1	1	1	1	1	1	1	1	1	-
Gray Scale Of Red	Black	0	0	0	0	0	0	0	0	0	0	0	0	0	0	0	0	0	0	R0
	Dark	1	0	0	0	0	0	0	0	0	0	0	0	0	0	0	0	0	0	R1
	↑	0	1	0	0	0	0	0	0	0	0	0	0	0	0	0	0	0	0	R2
	:	:	:	:	:	:	:	:	:	:	:	:	:	:	:	:	:	:	:	R3~R60
	:	:	:	:	:	:	:	:	:	:	:	:	:	:	:	:	:	:	:	
	↓	1	0	1	1	1	1	0	0	0	0	0	0	0	0	0	0	0	0	R61
	Light	0	1	1	1	1	1	0	0	0	0	0	0	0	0	0	0	0	0	R62
	Red	1	1	1	1	1	1	0	0	0	0	0	0	0	0	0	0	0	0	R63
Gray Scale Of Green	Black	0	0	0	0	0	0	0	0	0	0	0	0	0	0	0	0	0	0	G0
	Dark	0	0	0	0	0	0	1	0	0	0	0	0	0	0	0	0	0	0	G1
	↑	0	0	0	0	0	0	0	1	0	0	0	0	0	0	0	0	0	0	G2
	:	:	:	:	:	:	:	:	:	:	:	:	:	:	:	:	:	:	:	G3~G60
	:	:	:	:	:	:	:	:	:	:	:	:	:	:	:	:	:	:	:	
	↓	0	0	0	0	0	0	1	0	1	1	1	1	0	0	0	0	0	0	G61
	Light	0	0	0	0	0	0	0	1	1	1	1	1	0	0	0	0	0	0	G62
	Green	0	0	0	0	0	0	1	1	1	1	1	1	0	0	0	0	0	0	G63
Gray Scale Of Blue	Black	0	0	0	0	0	0	0	0	0	0	0	0	0	0	0	0	0	0	B0
	Dark	0	0	0	0	0	0	0	0	0	0	0	0	1	0	0	0	0	0	B1
	↑	0	0	0	0	0	0	0	0	0	0	0	0	0	1	0	0	0	0	B2
	:	:	:	:	:	:	:	:	:	:	:	:	:	:	:	:	:	:	:	B3~B60
	:	:	:	:	:	:	:	:	:	:	:	:	:	:	:	:	:	:	:	
	↓	0	0	0	0	0	0	0	0	0	0	0	0	1	0	1	1	1	1	B61
	Light	0	0	0	0	0	0	0	0	0	0	0	0	0	1	1	1	1	1	B62
	Blue	0	0	0	0	0	0	0	0	0	0	0	0	1	1	1	1	1	1	B63

Note 1) Definition of gray :
Rn: Red gray, Gn: Green gray, Bn: Blue gray (n=gray level)
Note 2)Input signal: 0 =Low level voltage, 1=High level voltage

Samsung Secret

오학송06303588응용기술1파트(LCD)1292122139 20100625164722

031261277451760

5.5 Pixel Format in the display

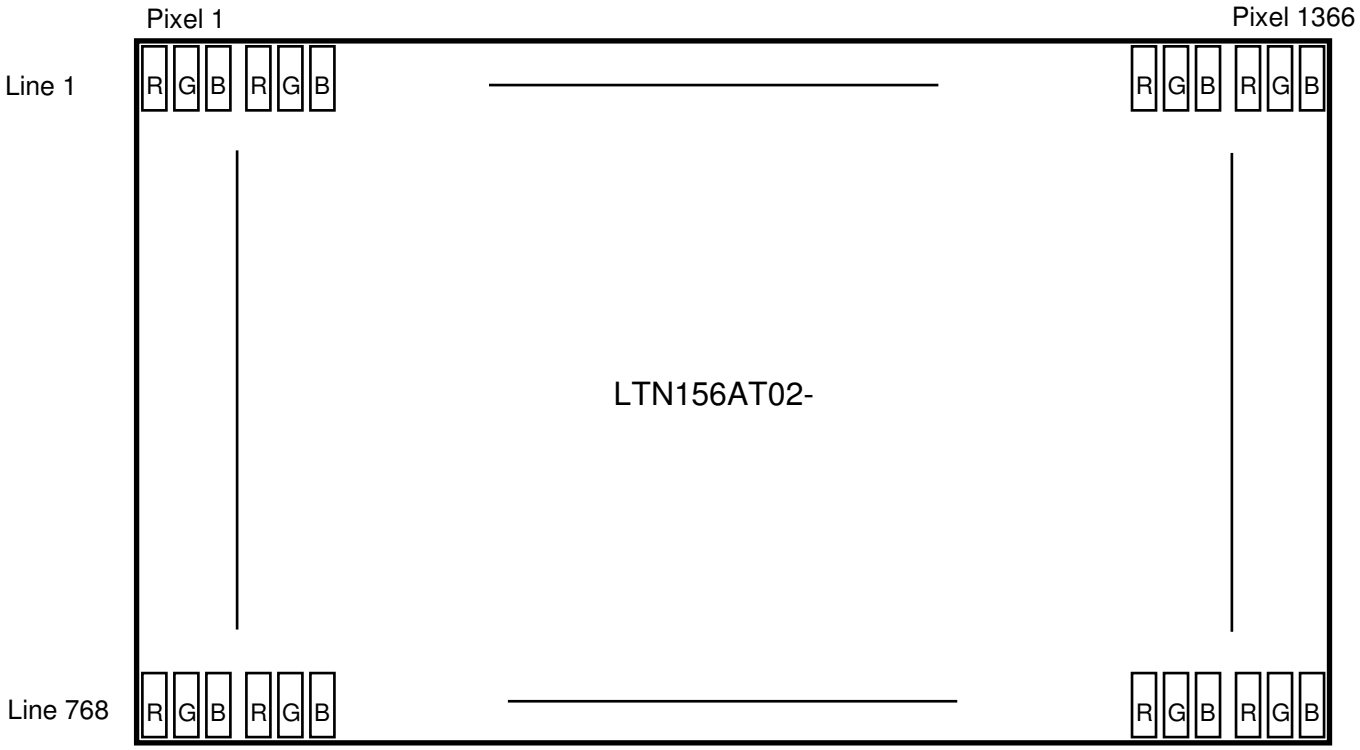

오학송06303588응용기술1파트(LCD)1292122139 20100625164722

031261277451760

6. INTERFACE TIMING

6.1 Timing Parameters

Signal	Item	Symbol	Min.	Typ.	Max.	Unit	Note
Frame Frequency	Cycle	TV	-	790	-	Lines	-
Vertical Active Display Term	Display Period	TVD	-	768	-	Lines	-
One Line Scanning Time	Cycle	TH	-	1526	-	Clocks	-
Horizontal Active Display Term	Display Period	THD	-	1366	-	Clocks	-

6.2 Timing diagrams of interface signal

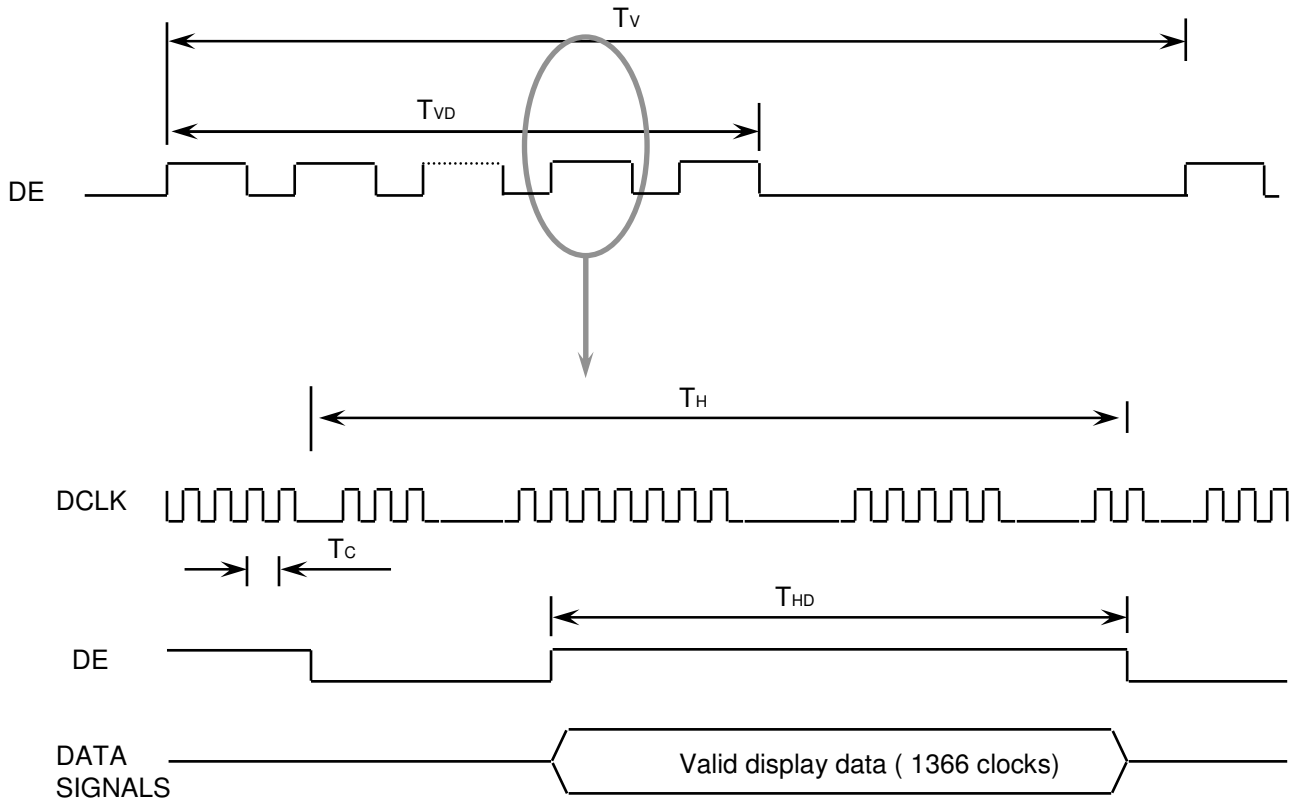

오학송06303588응용기술1파트(LCD)1292122139 20100625164722

031261277451760

6.3 Power ON/OFF Sequence

: To prevent a latch-up or DC operation of the LCD module, the power on/off sequence should be as the diagram below.

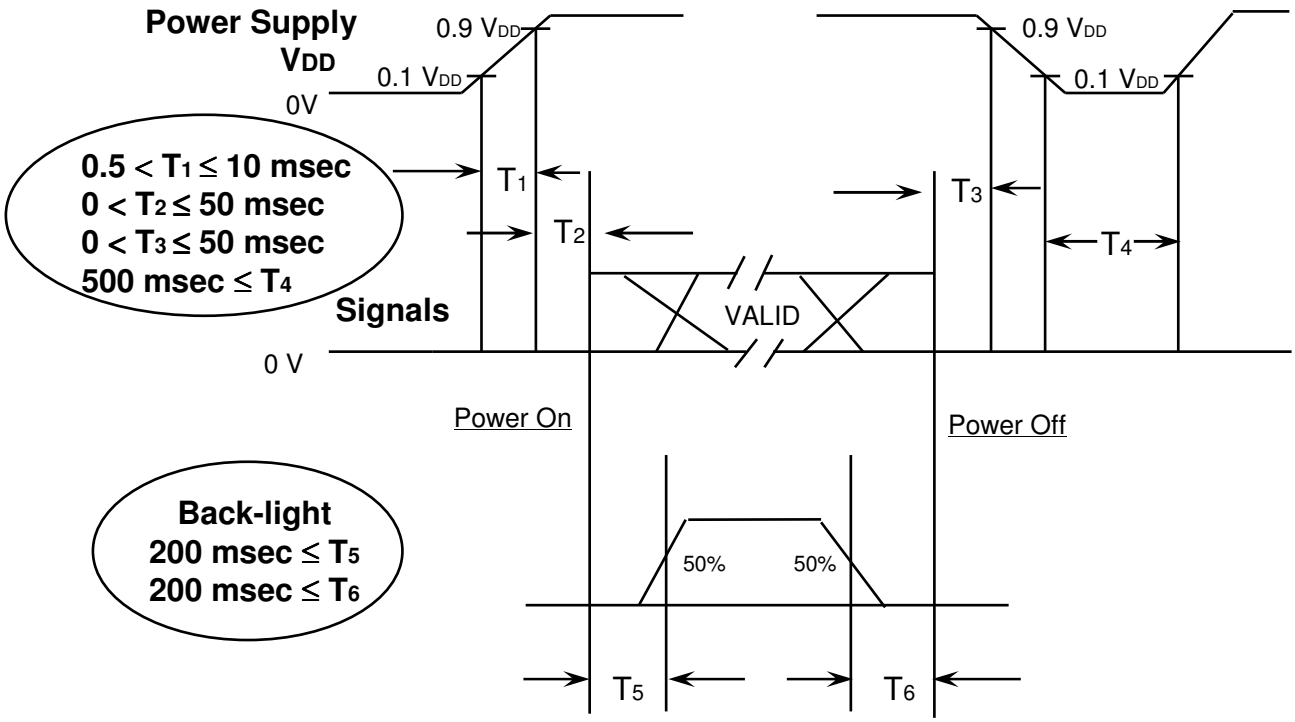

Power ON/OFF Sequence

T1 : Vdd rising time from 10% to 90%
T2 : The time from Vdd to valid data at power ON.
T3 : The time from valid data off to Vdd off at power Off.
T4 : Vdd off time for Windows restart
T5 : The time from valid data to B/L enable at power ON.
T6 : The time from valid data off to B/L disable at power Off.

NOTE.

(1) The supply voltage of the external system for the module input should be the same as the definition of VDD.

(2) Apply the lamp voltage within the LCD operation range. When the back-light turns on before the LCD operation or the LCD turns off before the back-light turns off, the display may momentarily become white.

(3) In case of VDD = off level, please keep the level of input signals on the low or keep a high impedance.

(4) T4 should be measured after the module has been fully discharged between power off and on period.

(5) Interface signal shall not be kept at high impedance when the power is on.

Samsung Secret

오학송06303588응용기술1파트(LCD)1292122139 20100625164722

031261277451760

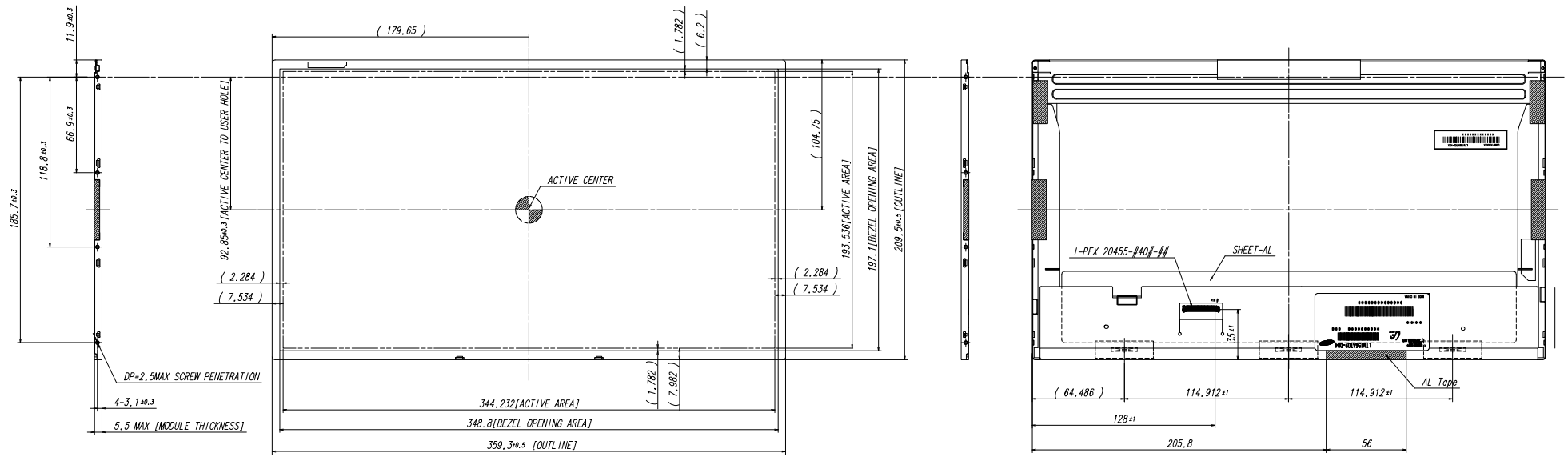

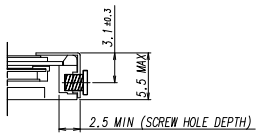

<USER HOLE SCREW HOLE DEPTH>

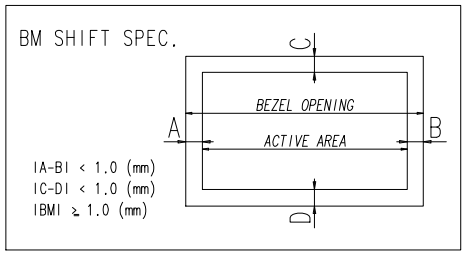

* NOTE

1. SIGNAL INTERFACE CONNECTOR TO BE SPECIFIED AS BELOW.
   -. MAKER : I-PEX OR COMPATIBLE
   -. INPUT CONNECTOR : I-PEX 20455-#40#-## OR EQUIVALENT
2. LED CONNECTOR FOR BACKLIGHT TO BE SPECIFIED AS BELOW.
   -. MAKER : UJU Electronics
   -. PART NO : 51441-1041
3. CALIFERS MEASURING FORCE : 750 ± 250 gfcm
4. MAXIMUM SCREW TORQUE : MAX 2.5 Kgf-cm(5TIMES)
5. WEIGHT : 520 g MAX
6. IN ORDER TO AVOID IC DAMAGE, IT IS NOT ALLOW THAT OVERLAPPING OF CABLES OR ANTENNAS, CAMERA, WLAN, WWAN, OVER THESE COF LOCATIONS.

REV	DATE	DESCRIPTION OF REVISION				REASON	CHG'D BY
UNIT	mm	DRA'N BY	DES'D BY	CHK'D BY	APP'D BY	MODEL NAME	LTN156AT02-D04
SCALE	1/1		H.H.KIM			PART/SHEET NAME	OUTLINE DIMENSION
GENERAL TOLERANCE ± 0.5			2009.05.13				
SAMSUNG ELECTRONICS				SPEC. NO		CODE NO.	-
							SHEET 1/1
							VER. 000

REVISION

김현향02068340개발1그룹(LCD)12923053 20090826143647

007051251264807

8. PACKING

1. CARTON(Internal Package)

(1) Packing Form
Corrugated Cardboard box and Corrupad form as shock absorber

(2) Packing Method

CUSHION BOTTOM

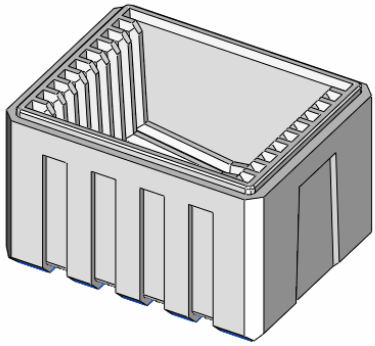

PANEL : 2EA/SLIT

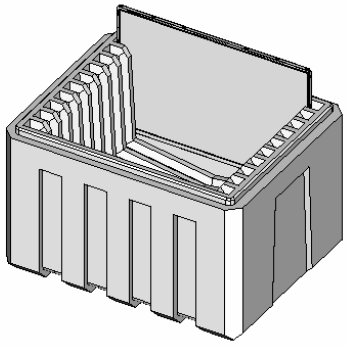

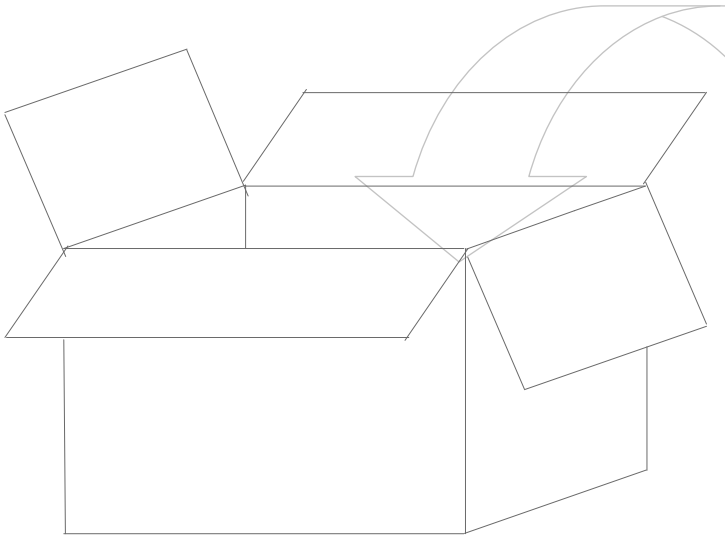

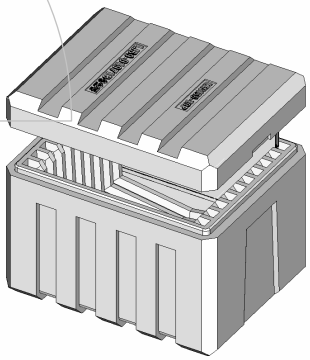

CUSHION TOP, BOTTOM

Note (1) Total : Approx. 12400g

(2) Acceptance number of piling : 20 sets

(3) Carton size : 344(W) X 432(D) X 329(H)

오학송06303588응용기술1파트(LCD)1292122139 20100625164722

031261277451760

No	Part name	Quantity
1	Static electric protective sack	10
2	Packing case (Inner box) included shock absorber	1 set
3	Pictorial marking	2 pcs
4	Carton	1 set

9. MARKINGS & OTHERS

A nameplate bearing followed by is affixed to a shipped product at the specified location on each product.

(1) Parts number : LTNXXXXXXX-XXX

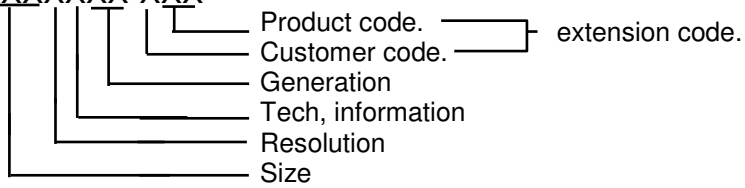

(2) Revision : Three letters

(3) Lot number : X Y 7 A XXX XX X

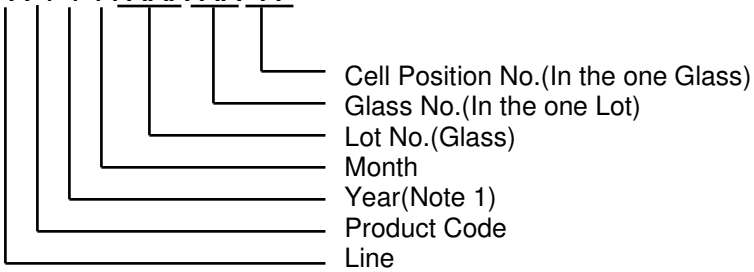

NOTE 1). This code indicating year is omitted in the products of KIHEUNG site.

(5) Nameplate Indication(Following example is only for reference)

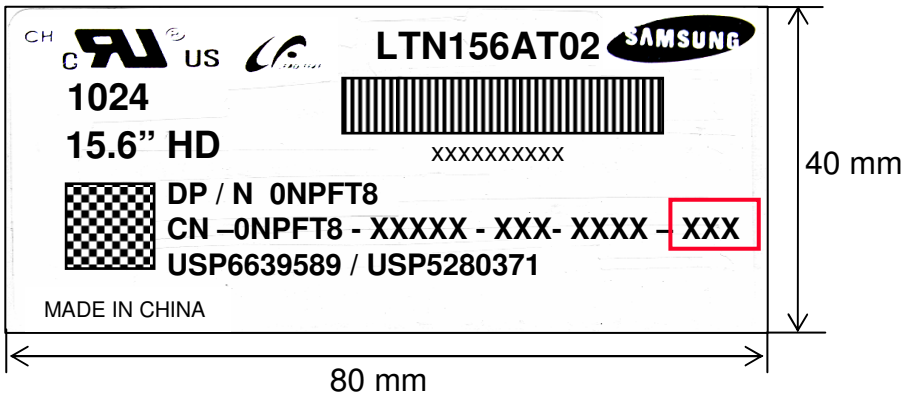

Parts name : LTN156AT02
Lot number : xxxxxxxxxx
Inspected work week : 1024 Number (2010 year 24st week)
DP/N : Part No ("**0NPFT8**" is for LTN156AT02)
XXX : Product Revision Code

Samsung Secret

오학송06303588응용기술1파트(LCD)1292122139 20100625164722

031261277451760

This HIGH VOLTAGE CAUTION is carved in mold frame

	HIGH VOLTAGE CAUTION RISK OF ELECTRIC SHOCK DISCONNECT THE ELECTRIC POWER BEFORE SERVICE	THIS COVER CONTAINS FLUORESCENT LAMP. PLEASE FOLLOW LOCAL ORDINANCES OR REGULATIONS FOR ITS DISPOSAL

10mm High voltage caution

70mm

※ Panel revision code scheme (Refer to the Red box on the label)

Build Name(s)	Revision Code(s)
SST (WS)	X00, X01, X02, … X09
PT (ES)	X10, X11, X12, … X19
ST (CS)	X20, X21, X23, … X29
XB (MP)	A00, A01, A02, … A99

(6) Packing small box attach (Following example is only for reference)

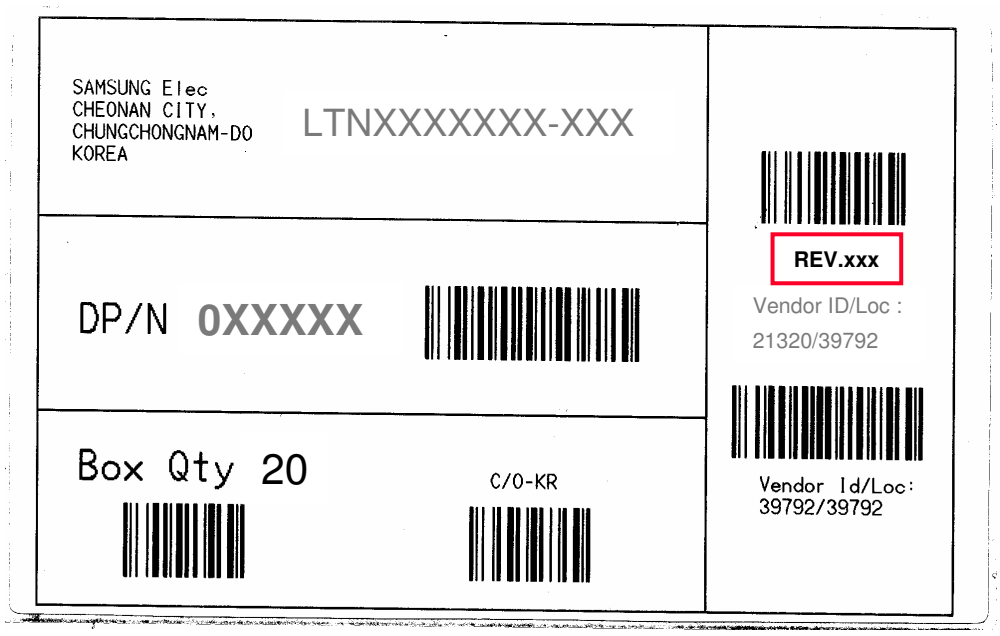

(7) Packing box Marking : Samsung TFT-LCD Brand Name

wise view™

오학송06303588응용기술1파트(LCD)1292122139 20100625164722

031261277451760

10. GENERAL PRECAUTIONS

Approval

1. Handling

(a) When the module is assembled, It should be attached to the system firmly using every mounting holes. Be careful not to twist and bend the modules.

(b) Refrain from strong mechanical shock and / or any force to the module. In addition to damage, this may cause improper operation or damage to the module.

(c) Note that polarizers are very fragile and could be easily damaged. Do not press or scratch the surface harder than a HB pencil lead.

(d) Wipe off water droplets or oil immediately. If you leave the droplets for a long time, Staining and discoloration may occur.

(e) If the surface of the polarizer is dirty, clean it using some absorbent cotton or soft cloth.

(f) The desirable cleaners are water, IPA (Isoprophyl Alcohol) or Hexane.
Do not use Ketone type materials(ex. Acetone), Ethyl alcohol, Toluene, Ethyl acid or Methyl chloride. It might permanent damage to the polarizer due to chemical reaction.

(g) If the liquid crystal material leaks from the panel, it should be kept away from the eyes or mouth . In case of contact with hands, legs or clothes, it must be washed away thoroughly with soap.

(h) Protect the module from static , it may cause damage to the C-MOS Gate Array IC.

(i) Use fingerstalls with soft gloves in order to keep display clean during the incoming inspection and assembly process.

(j) Do not disassemble the module.

(k) Do not pull or fold the lamp wire.

(l) Do not adjust the variable resistor which is located on the back side.

(m) Protection film for polarizer on the module shall be slowly peeled off just before use so that the electrostatic charge can be minimized.

(n) Pins of I/F connector shall not be touched directly with bare hands.

오학송06303588응용기술1파트(LCD)1292122139 20100625164722

031261277451760

2. STORAGE

(a) Do not leave the module in high temperature, and high humidity for a long time. It is highly recommended to store the module with temperature from 0 to 35 °C and relative humidity of less than 70%.

(b) Do not store the TFT-LCD module in direct sunlight.

(c) The module shall be stored in a dark place. It is prohibited to apply sunlight or fluorescent light during the store.

3. OPERATION

(a) Do not connect,disconnect the module in the " Power On" condition.

(b) Power supply should always be turned on/off by following item 6.3 " Power on/off sequence ".

(c) Module has high frequency circuits. Sufficient suppression to the electromagnetic interference shall be done by system manufacturers. Grounding and shielding methods may be important to minimize the interference.

(d) The standard limited warranty is only applicable when the module is used for general notebook applications. If used for purposes other than as specified, SEC is not to be held reliable for the defective operations. It is strongly recommended to contact SEC to find out fitness for a particular purpose.

4. OTHERS

(a) Ultra-violet ray filter is necessary for outdoor operation.

(b) Avoid condensation of water. It may result in improper operation or disconnection of electrode.

(c) Do not exceed the absolute maximum rating value. (the supply voltage variation, input voltage variation, variation in part contents and environmental temperature, so on) Otherwise the module may be damaged.

(d) If the module displays the same pattern continuously for a long period of time,it can be the situation when the image "sticks" to the screen.

(e) This module has its circuitry PCB's on the rear side and should be handled carefully in order not to be stressed.

오학송06303588응용기술1파트(LCD)1292122139 20100625164722

031261277451760