SAMSUNG

SAMSUNG DISPLAY

LEAD-FREE

Product Specification

CUSTOMER	
DATE OF ISSUE	

MODEL NO.	LTN156HL06
EXTENSION CODE	

Approved by	
Prepared by	

Table of Contents

REVISION HISTORY

Date.	Rev. No.	Page	Revision Description
13/10/30	V0.0		Initial Release
14/01/14	V0.1	5 Page	MECHANICAL INFORMATION (Panel Size)
		14 Page	TFT LCD MODULE (Main Frequency (Min) @60Hz)
		19 Page	INTERFACE TIMING (Scanning time in one line (Min))
14/01/21	V0.2	5 Page	MECHANICAL INFORMATION (Module Size : Depth(D))

1. GENERAL DESCRIPTION

DESCRIPTION

The LTN156HL06-C01 active matrix TFT (Thin Film Transistor) liquid crystal display (LCD) that uses amorphous silicon TFTs as switching components. This model is composed of a TFT LCD panel, a driver circuit, and a backlight unit. This 15.6" model has a resolution of 1920 x 1080 pixels and can display up to 16,194,277 colors.

FEATURES

High contrast ratio
FHD (1920 x 1080 pixels) resolution
Low power consumption
Fast Response
LED back light with an embedded LED driver
DE (Data enable) only mode
3.3V eDP Interface
Onboard EDID chip

APPLICATIONS

Notebook PC
If the intent to use this product is for other purpose, please contact Samsung Display.

GENERAL INFORMATION

Item	Specification	Unit	Note
Display area	344.16 (H) x 193.59 (V) (15.6"diagonal)	mm	
Driver Element	a-Si TFT active matrix		
Display colors	16,194,277 (6bit FRC)		
Number of pixel	1920 * 1080 (FHD)	Pixel	16:9
Pixel Arrangement	RGB vertical stripe		
Pixel pitch	0.17925 (H) x 0.17925 (V) (TYP.)	mm	
Display Mode	Normally black, PLS mode		
Thickness of glass	0.3	mm	
Surface treatment	Hardness 2H		Glare
Environmental safe regulation	Pb Free, Halogen Free		
Power Consumption	Total 5.5W(Max) Logic 1.60(Max) BLU 3.90W(Max)		Mosaic PTN

MECHANICAL INFORMATION

Item		Min.	Typ.	Max.	Unit	Note
Panel Size	Thickness	0.275	0.300	0.325	mm	glass
		0.83	0.89	0.95	mm	bonding with Pol.
Module Size	Horizontal (H)	359.0	359.5	360.0	mm	
	Vertical (V)	223.3	223.8	224.3	mm	with flange & PCB
		206.0	206.5	207.0	mm	w/o flange & PCB
	Depth (D)	2.75	3.05	3.20	mm	(1) 1,2,3,4 Part
		-	-	3.20	mm	(1) 5,6,7,8,9 Part
면보정	△T	-1.1	-	0.1	mm	(2)
Weight		300	325	350	g	

NOTE (1) Measuring method for thickness

Force to be applied for measurement (1,2,3,4 Part) : The 200gf when using the height gauge.

Force to be applied for measurement (5,6,7,8,9 Part) : The 30gf when using the height gauge.

※Caution : 5,6,7,8,9 Part should be measured with force toward to front (POL) Side.

Force to be applied for measurement (COF Part) : The 50gf when using the height gauge.

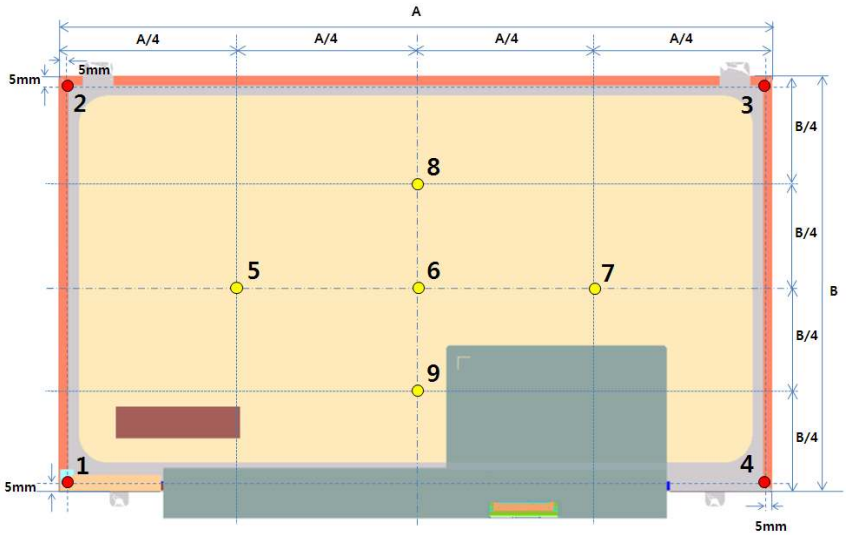

This picture is reference for measurement. Appearance may be different according to each model type.

NOTE (2) Measuring points for 면보정(평탄도)

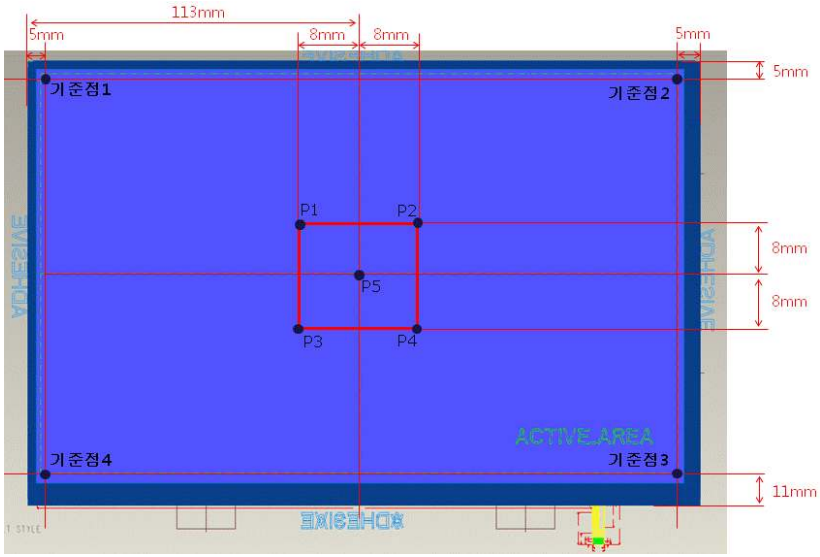

2. ABSOLUTE MAXIMUM RATINGS

2.1 ENVIRONMENTAL ABSOLUTE RATINGS

Item	Symbol	Min.	Max.	Unit	Note
Storage temperate	TSTG	-20	60	°C	(1)
Operating temperature (Temperature of glass surface)	TOPR	0	50	°C	(1)
Shock (non-operating)	Snop	-	240	G	(2), (4)
Vibration (non-operating)	Vnop	-	2.41	G	(3), (4)

Note (1) The range of temperature and relative humidity is shown in the graph below 90% RH Max. .
(39℃ ≥ Ta) If the temperature is higher than 40 ℃, the maximum temperature of wet–bulb shall be less than 39℃. No condensation

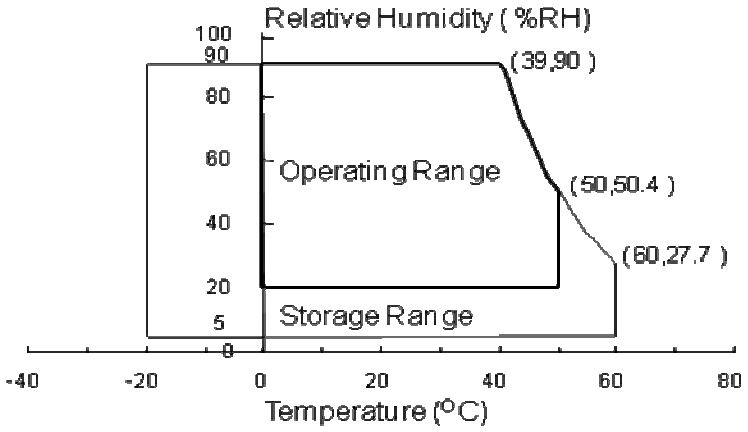

(2) Vibrate ±X, ±Y, and ± Z axis in the shape of the half sine wave one time for 2ms.
(3) Vibrate the X, Y, and Z randomly within a 5 - 500 Hz range for 30min.
(4) When testing a vibration and a shock, the fixture, which holds the module to be tested, shall be hard and rigid in order for the module not to be twisted or bent by the fixture.

2.2 ELECTRICAL ABSOLUTE RATINGS

(1) TFT LCD MODULE

V_{LCD_VCC} = 3.3V, V_{SS} = GND = 0V

Item	Symbol	Min.	Max.	Unit	Note
Power Supply Voltage	V_{LCD_VCC}	V_{SS} - 0.3	4.0	V	(1), (2)
eDP Input Voltage	V_{eDP}	V_{SS} - 0.3	2.0		

Note (1) Within Ta (25 ± 2 °C)
(2) Permanent damage to the device may occur if exceed maximum values.

(2) BACKLIGHT UNIT

VSS = GND = 0V

Item	Symbol	Min.	Max.	Unit	Note
BLU Supply Voltage	V_{BL_PWR}	V_{SS} - 0.3	28	V	(1), (2)
BLU Supply Current	I_{BL_PWR}	-	1	A	(1), (2) Vin=12V Duty 100%

Note (1) Within Ta (25 ± 2 °C)
(2) Permanent damage to the device may occur if exceed maximum values

2.3 THE OTHERS

(1) STATIC ELECTRICITY PRESSURE RESISTANCE

Item	Test Conditions	Remark
CONTACT DISCHARGE	150pF, 330Ω, ± 8kV, 200points, 1 time/point	Operating
AIR DISCHARGE	150pF, 330Ω, ± 15kV, 200points, 1 time/point	Operating

3. OPTICAL CHARACTERISTICS

The following items are measured under the stable conditions.* The optical characteristics should be measured in the dark room or the equivalent environment by the methods shown in the Note (5).
Measuring equipment: TOPCON SR-3 or CA-210(310)
The optical measuring equipment must be correlated with the equipment of customer.

표준계측기 : 삼성전자 무선사업부 신뢰성시험그룹 CS-2000

Ta = 25 ± 2 °C, V_{LCD_VCC}=3.3V, f_V = 60Hz, f_{DCLK} = 71.39MHz, I_F = 100% duty

Item		Symbol	Condition	Min.	Typ.	Max.	Unit	Note
Contrast Ratio		CR	Normal Viewing Angle ϕ = 0 θ = 0	500	800	1300	-	(1),(2),(5) CA-210
Response time (Rising + Falling)		T_{RT}		-	30	35	msec	(1),(3)
Average Luminance of White (5 Points)		$Y_{L,AVE}$		240	300	360	cd/m^2	IF=100% Duty (1),(4) CA-210
Cross Modulation		DSHA		-	1.0	2.0	%	(7)
White Color Temperature		CCT		6300	6800	7500	K	(1) CA-210
Gamma		γ		1.9	2.2	2.5	-	(8) CA-210
Gradation Linearity		△u'v'		0	0.01	0.02	-	(1)(9) CA-210
White uv		△uv		-0.0025 (-5MPCD)	0.005 (10MPCD)	0.0125 (25MPCD)	-	(10) CA-210
Color Shift		-		-	-	0.015	-	
Color Chromaticity (CIE)	Red	R_X		-0.03	0.640	+0.03		(1)
		R_Y			0.330			
	Green	G_X			0.300			
		G_Y			0.600			
	Blue	B_X			0.150			
		B_Y			0.060			
	White	W_X			0.313			
		W_Y			0.329			
Viewing Angle	Hor.	θ_L	CR ≥ 10 At center	80	85	-	Degrees	(1),(5)
		θ_H		80	85	-		
	Ver.	ϕ_H		80	85	-		
		ϕ_L		80	85	-		
Color Gamut		CG		65.8	70.8	75.8	%	NTSC
White Uniformity (13P)		δ_L		70	80	-	%	(6) CA-210

Note (1) The definition of viewing angle: The range of viewing angle (10 ≤ C/R)

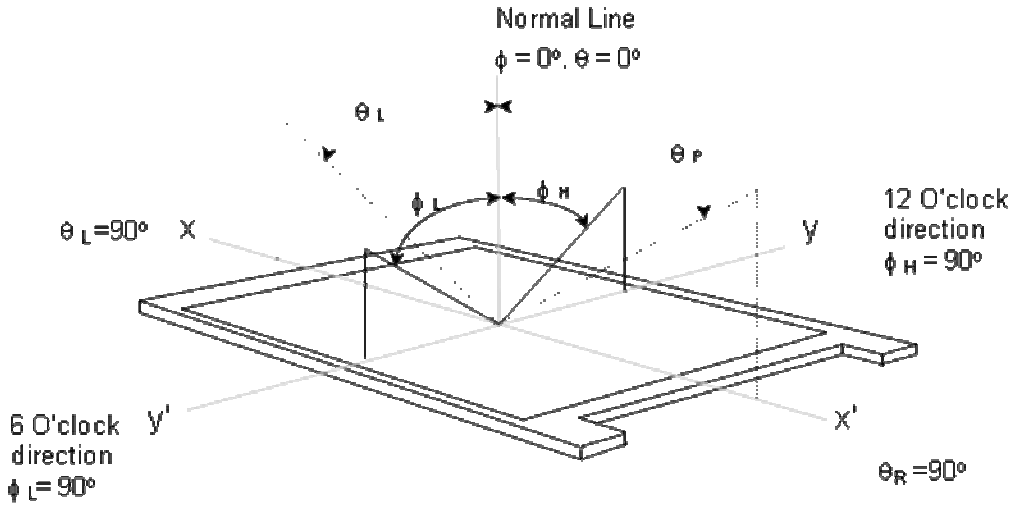

Note (2) The definition of contrast ratio (CR): The ratio of max. gray and min gray at 5 points (4, 5, 7, 9, and 10)

$$CR = \frac{CR(4) + CR(5) + CR(7) + CR(9) + CR(10)}{5}$$

Points = 4 , 5 , 7 , 9 , 10 at the figure of Note(6).

Note (3) The definition of Response time: Subtotal of the time, during which the transmission changes from 10% to 90% when the TFT turns on and off.

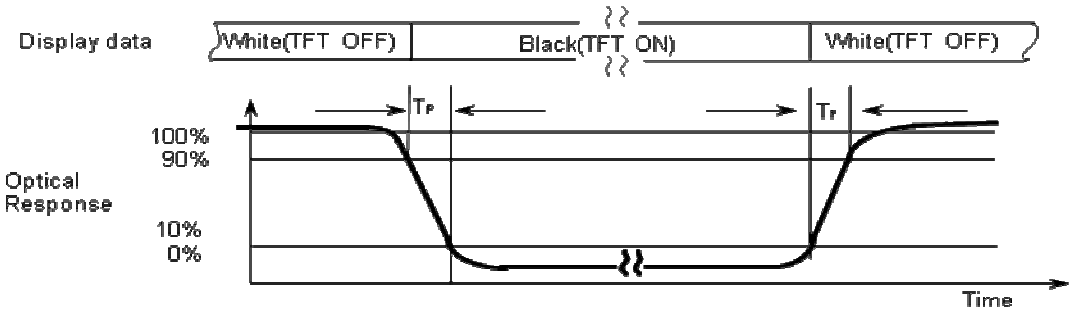

Note (4) The definition of average luminance of white: Measure the luminance of white at 5 points.

$$Y_{L.AVE} = \frac{Y_{L4} + Y_{L5} + Y_{L7} + Y_{L9} + Y_{L10}}{5}$$

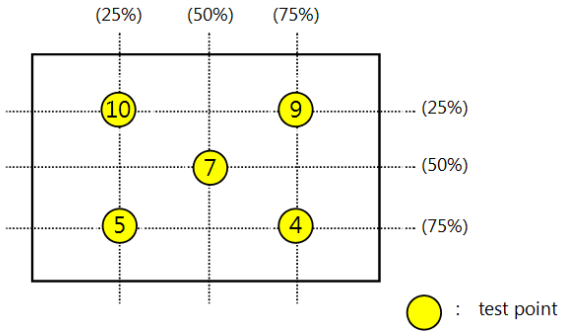

Note (5) Measure the panel, which is left for 30 min. at the normal temp. after leaving it for 30 min with turning the back light on at the rating. The measurement should be executed under the condition including the ambient temp., 25℃±2℃, the dark room, windless (removed the direct wind), and no vibration.

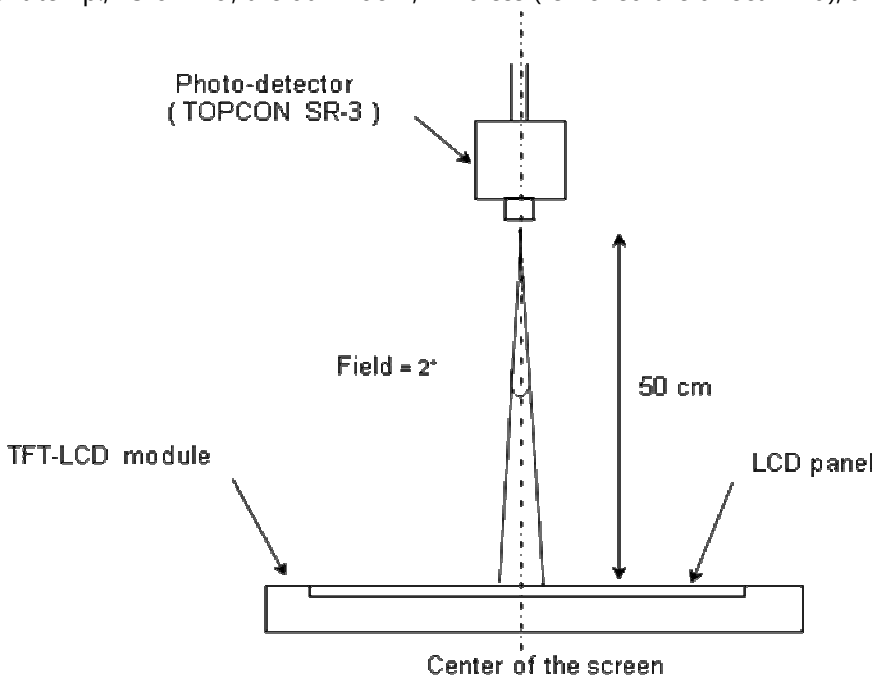

[Optical characteristics measurement setup]

Note (6) The definition of white variation at 13 points (δ L)

$$\delta L = \frac{\text{Maximum luminance of 13 points}}{\text{Minimum luminance of 13 points}}$$

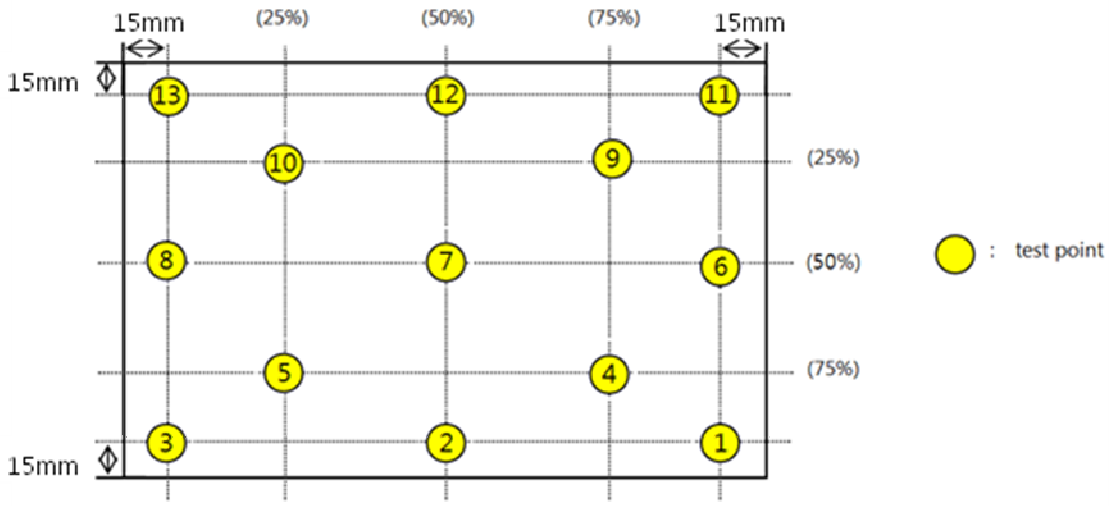

Note (7) The definition of crosstalk (Cross modulation)

: The phenomenon, which the contrast ratio is decreased by the interference of signal between pixels

Crosstalk Calculation Method

$$\textbf{Crosstalk Modulation Ratio}(D_{SHA}) = \frac{|Y_A - Y_B|}{Y_A} \times 100\ (\%)$$

Where

Y_A, Y_B = Measured under the 2° viewing angle (Measured area: ψ12 ㎜)

The rectangle area, which excludes the black-colored rectangle includes the range, which is from 1 gray to 63 gray.

1) The method of measurement for horizontal-crosstalk

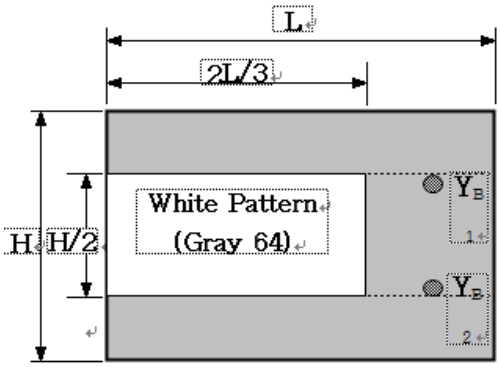

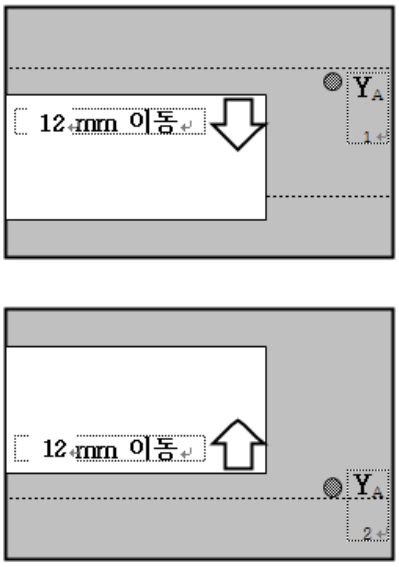

2) The method of measurement for vertical-crosstalk

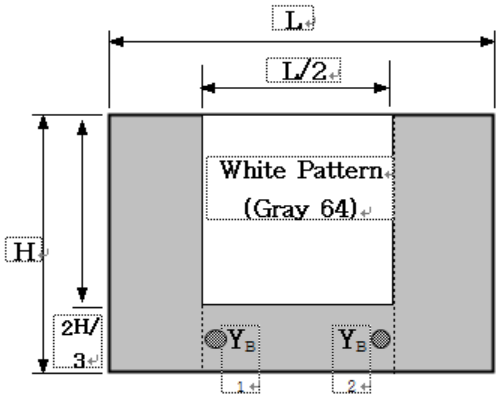

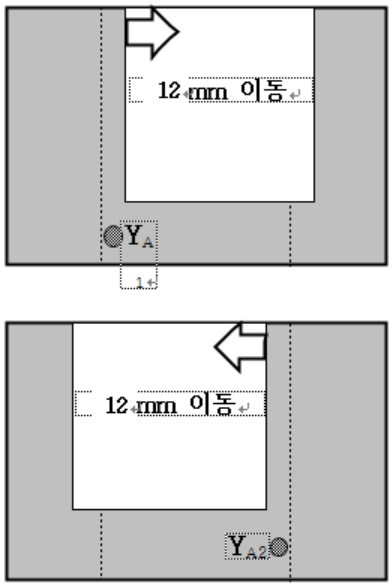

Note (8) The definition of Gamma (γ) :

$$T = T_{max} \times (Gray\ n / Gray\ max)^{\gamma}$$ (n=0~63Gray , Measure center of the screen.)

Note (9) The definition of Gradation Linearity △u'v' :

$$\Delta u'v' = \sqrt{(u'max - u'min)^2 + (v'max - v'min)^2}$$

Measured u', v' color coordination at the following gray scale level
(255 gray scale level: 252, 224, 192, 164, 132, 104, 72, 48)

Note (10) The definition of △uv : Color Difference from Blackbody Locus (Measure center of the screen.)

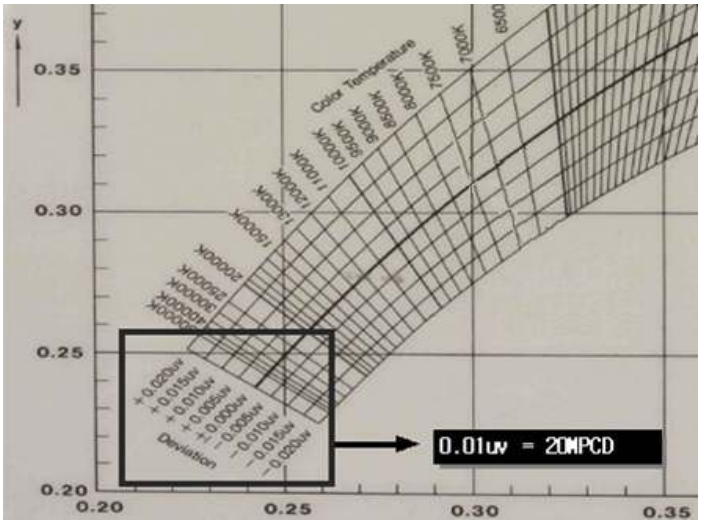

4. BLOCK DIAGRAM

4.1 TFT LCD MODULE

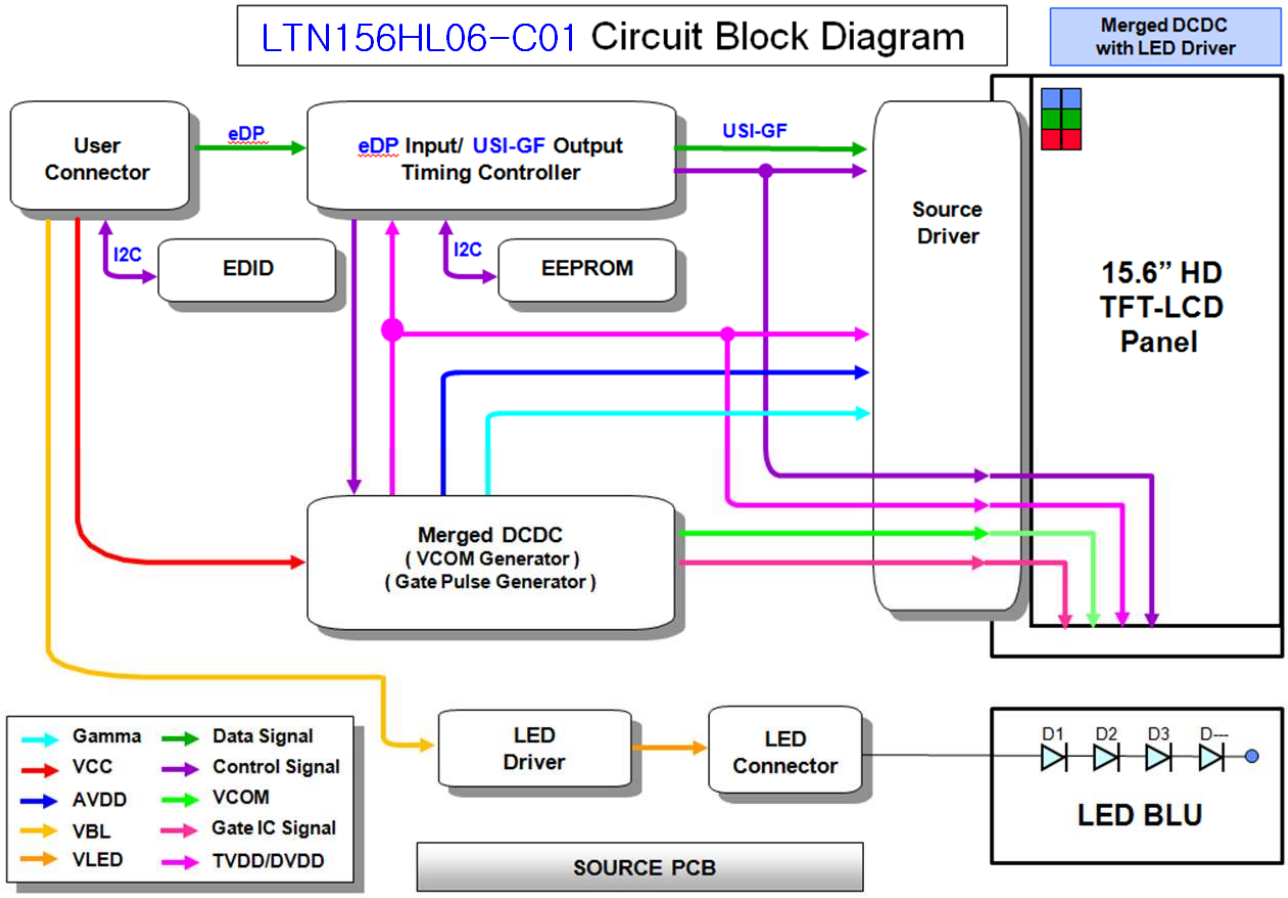

4.2 THE STRUCTURE OF LED PLACEMENT

(5 channels x 10ea = 50ea)

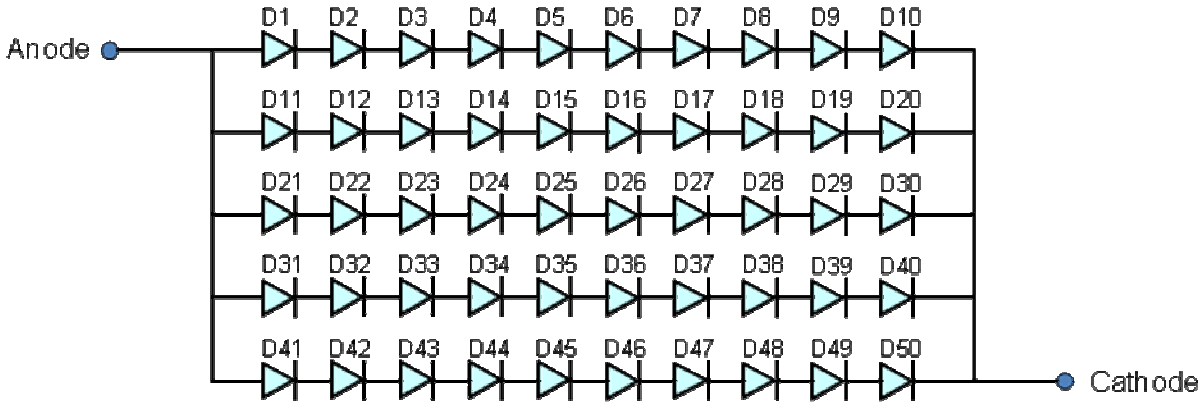

5. ELECTRICAL CHARACTERISTICS

5.1 TFT LCD MODULE

Ta = 25 ± 2 °C

Item		Symbol	Min.	Typ.	Max.	Unit	Note
Power Supply Voltage		V_{LCD_VCC}	3.0	3.3	3.6	V	
T-CON TTL Input Voltage	High	V_{IH}	0.7 V_{LCD_VCC}	-	-	V	(1)
	Low	V_{IL}	-	-	0.3 V_{LCD_VCC}	V	
Vsync	60Hz	f_V	-	60	-	Hz	
	50Hz	f_V	-	50	-	Hz	(3)
	40Hz	f_V	-	40	-	Hz	
Hsync	60Hz	f_H	66.84	68.64	70.44	kHz	
Main Frequency	60Hz	f_{DCLK}	68.85	71.39	76.78	MHz	
	50Hz	f_{DCLK}	-	59.49	-	MHz	(3)
	40Hz	f_{DCLK}	-	47.59	-	MHz	
Rush Current		I_{RUSH}	-	-	1.5	A	(5)
Input Current	White	I_{LCD_VCC}	350	565	590	mA	(2), (4)
	Mosaic	I_{LCD_VCC}	-	440	484	mA	
	Black	I_{LCD_VCC}	-	330	380	mA	
	V.Stripe	I_{LCD_VCC}	-	490	520	mA	
	Red	I_{LCD_VCC}	-	400	440	mA	(2),(4)
	Green	I_{LCD_VCC}	-	400	440	mA	
	Blue	I_{LCD_VCC}	-	400	440	mA	
	1Dot	I_{LCD_VCC}	-	650	690	mA	(2), (4)
Logic Input Power Consumption		P_{LCD_VCC}	-	1.45	1.60		(4)*(b)
EDID Input Voltage		V_{EDID}	3.0	3.3	3.6	V	
EDID Input Current		I_{EDID}	-	-	5	mA	
Skew		PS	-400	-	400	ps	(2)

Note (1) The data pins for display and signal pins for timing should be connected. (GND= 0V)

(2) f_V = 60Hz, f_{DCLK} = 71.39MHZ, V_{LCD_VCC} = 3.3V, DC Current.

(3) In the case of 40Hz & 50Hz for sDRRS, FOS,
Flicker & Brightness are not guaranteed, because their level might be different from 60Hz operation.

Note (4) The dissipation pattern for power

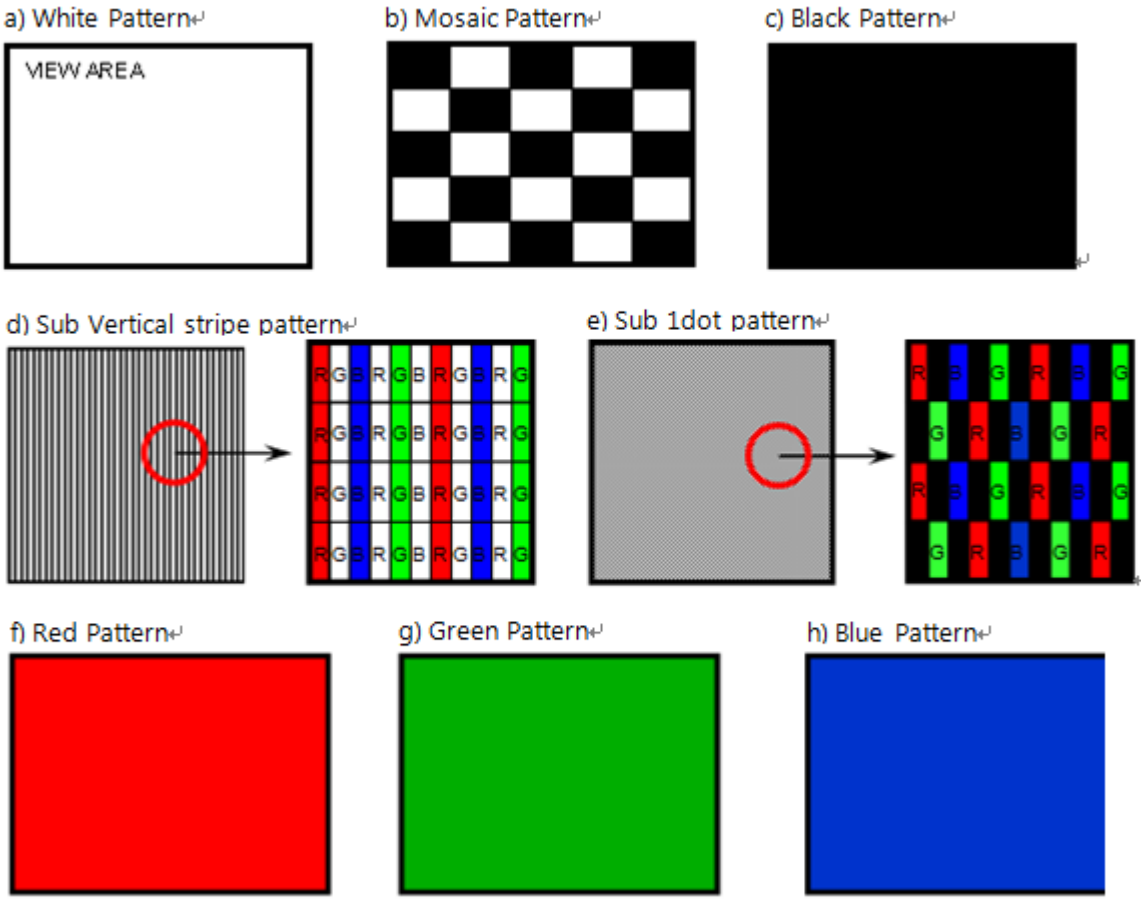

Note (5) The condition for measurement for rush current

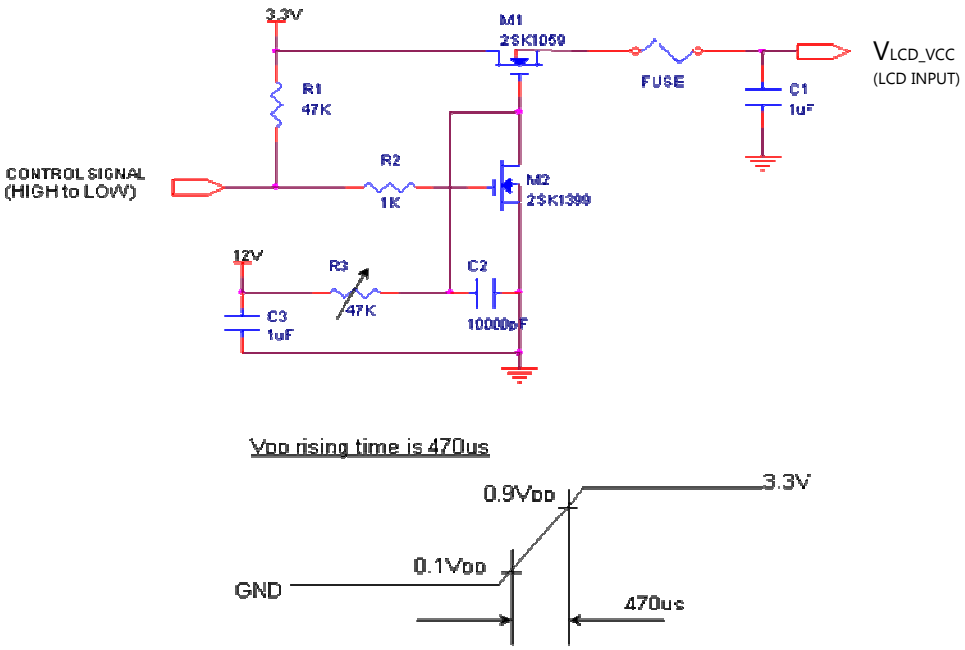

5.2 BACK LIGHT UNIT

Ta = 25 ± 2 °C

Item	Symbol	Min.	Typ.	Max.	Unit	Note
LED Forward Current	IF	-	21.1	-	mA	
LED Forward Voltage	VF	2.7	2.8	2.9	V	IF = 20mA
LED Array Voltage	VP	-	28	-	V	
LED Power Consumption	P	-	3.59	3.9	W	
LED Life time	Hr	15,000	-	-	Hours	(1)
LED Counts	Q	-	50	-	EA	

Note (1) The life time (Hr) of LEDs can be defined as the time during which it continues to operate under the condition, which the Ta is 25 ± 2 °C and IF= 21.1 mA rms until the one of the following events occurs when the brightness becomes 50% or lower than the original.

5.3 LED DRIVER

The manufacturer of LED driver: Richtek RT8561D

Ta= 25 ± 2 °C

Item		Symbol	Min.	Typ.	Max.	Unit	Note
Input Voltage		V_{BL_PWR}	6	12	21	V	
Input Current		I_{BL_PWR}	280	299	325	mA	Vin=12V Duty 100%
PWM duty Ratio		$D_{BL\_PWM\_DIM}$	1	-	100	%	
External PWM Frequency		$F_{BL\_PWM\_DIM}$	0.2	1	2	kHz	APS ON
			0.12	1	2	kHz	APS OFF
PWM Resolution		$R_{BL\_PWM\_DIM}$	0.8	-	-	%	APS ON
			0.3			%	APS OFF
In-Rush Current		$I_{RUSH\_BL\_PWR}$	-	-	1.5	A	(1)
EN Control Level	High	V_{BL_ENABLE}	1.5	-	5.0	V	
	Low		0.0	-	1.0	V	
PWM Control Level	High	$V_{BL\_PWM\_DIM}$	1.3	-	5.0	V	
	Low		0.0	-	1.0	V	
VBL_PWR @ LED Driver On		V_{BL_PWR}	5	-	20	V	
VBL_PWR @ LED Driver Off		V_{BL_PWR}	0	-	1.5	V	
Operating frequency		FO	0.8	1.0	1.2	kHz	
Efficiency		η	-	87	-	%	

Note (1) Rush current measurement condition

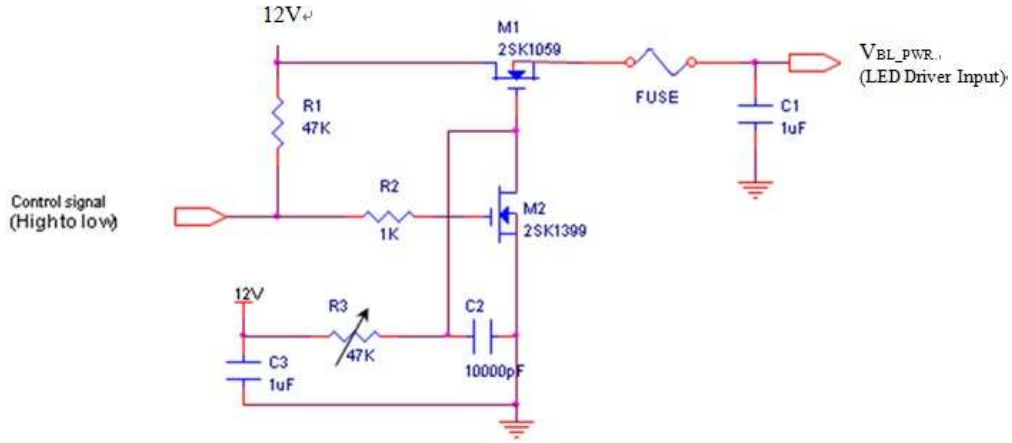

The VBL_PWR rising time is 470us.

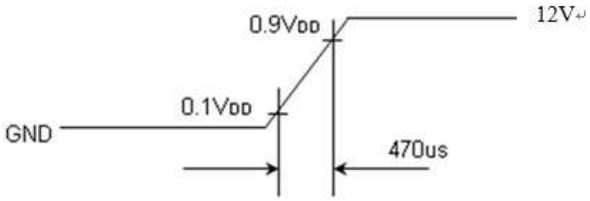

5.4 eDP INTERFACE

5.4.1 HDP Characteristics

Item	Symbol	Min.	Typ.	Max.	Unit	Note
HPD voltage	V_{OH_HPD}	2.25	-	3.63	V	
HPD_IRQ pulse width	T_{HPD_IRQ}	0.5	-	1	V	IOH=0mA VDD33=2.25~3.63V

5.4.3 AUX Characteristics

Item	Symbol	Min.	Typ.	Max.	Unit	Note
AUX unit interval	UI_{AUX}	0.4	0.5	0.6	us	
Number of pre-charge pulse	$N_{precharge}$	10	-	16	times	
AUX CH bus park time	$T_{AUX\text{-}BUS\text{-}PARK}$	10	-	-	Ns	
Max cycle-to-cycle output jitter within a single transaction	$T_{AUX\text{-}TX\text{-}JITTER}$	-	-	0.04	UI	
Max allowable cycle-to-cycle input jitter within a single transaction	$T_{AUX\text{-}RX\text{-}JITTER}$	-	-	0.05	UI	
AUX peak-to-peak output differential voltage	$V_{AUX\text{-}TX\text{-}DIFFp\text{-}p}$	0.39	-	1.38	V	(1)
AUX peak-to-peak input differential voltage	$V_{AUX\text{-}RX\text{-}DIFFp\text{-}p}$	0.32	-	1.38	V	(1)
AUX CH termination DC resistance	$R_{AUX\text{-}TERM}$	-	100	-	Ohm	
AUX DC common mode voltage	$V_{AUX\text{-}DC\text{-}CM}$	0	-	2	V	
AUX turn around common mode voltage	$V_{AUX\text{-}TURN\text{-}CM}$	-	-	0.4	V	(2)
AUX short circuit current limit	$I_{AUX\text{-}SHORT}$	-	-	90	mA	(3)

Note(1) $V_{AUX\text{-}DIFFp\text{-}p} = 2 \times |V_{DP\_AUX\_P} - V_{DP\_AUX\_N}|$
Note(2) Stable state common mode voltage shifts between transmit and receive mode
Note(3) Total drive current of the transmitter when it is shorted to its ground.

5.4.3 Main Link Characteristics

Item	Symbol	Min.	Typ.	Max.	Unit	Note
Unit interval for HBR (2.7Gbps/lane)	UIHBR	-	370	-		
Unit interval for RBR (1.62Gbps/lane)	UIRBR	-	617	-	Ps	(1)
RX DC Common mode voltage	VRX-DC-CM	0	-	2	Ps	(1)
RX short circuit current limit	IRX-SHORT	-	-	50	V	

Note (1) Frequency high limit = +300ppm, Frequency low limit = -5300ppm. Modulation frequency range of 30kHz to 33kHz is supported.

5.5 INTERFACE TIMING

5.5.1 TIMING PARAMETERS

Signal	Item	Symbol	Min.	Typ.	Max.	Unit	Note
Frame Frequency	Cycle	T_V	1114	1144	1174	Lines	
Vertical active in the display term	Display Period	T_{VD}	-	1080	-	Lines	
Scanning time in one line	Cycle	T_H	1030	1040	1090	Clocks	
Horizontal active in the display term	Display Period	T_{HD}	-	960	-	Clocks	

5.5.2 TIMING DIAGRAMS OF INTERFACE SIGNAL

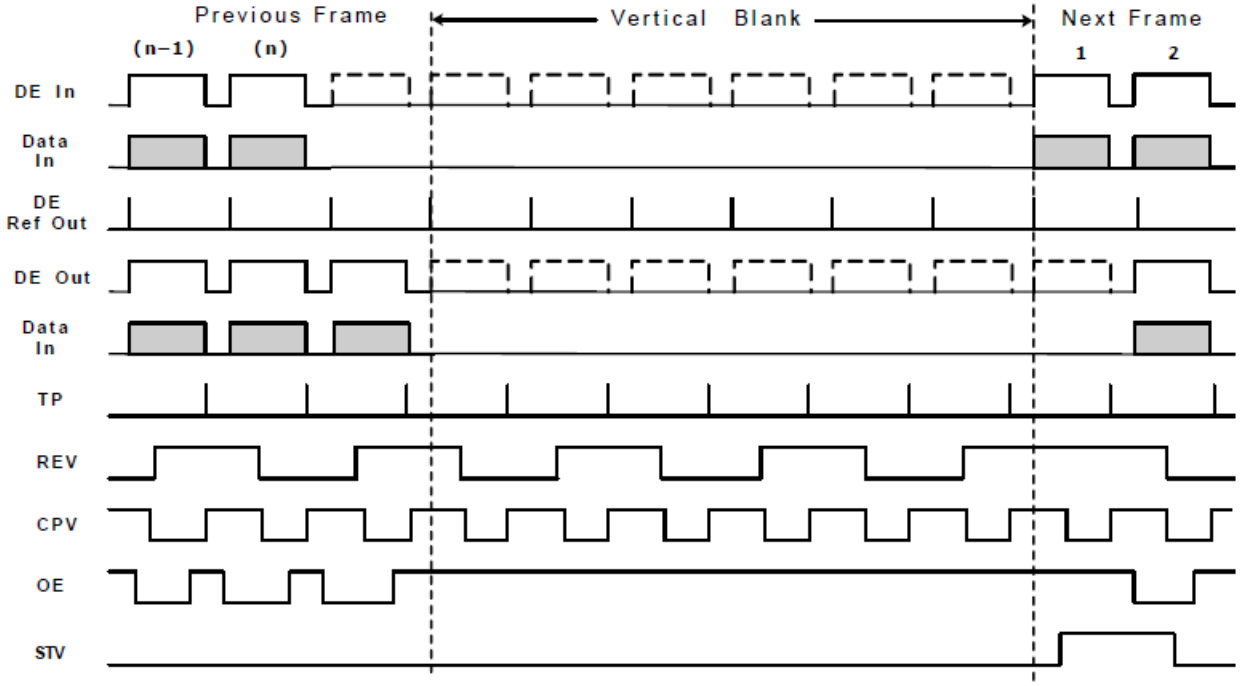

5.6 POWER ON/OFF SEQUENCE

To prevent the product from being latched up or the DC in the LCD module from starting an operation, the order to turn the power on and off should be changed to the order as shown in the diagram below.

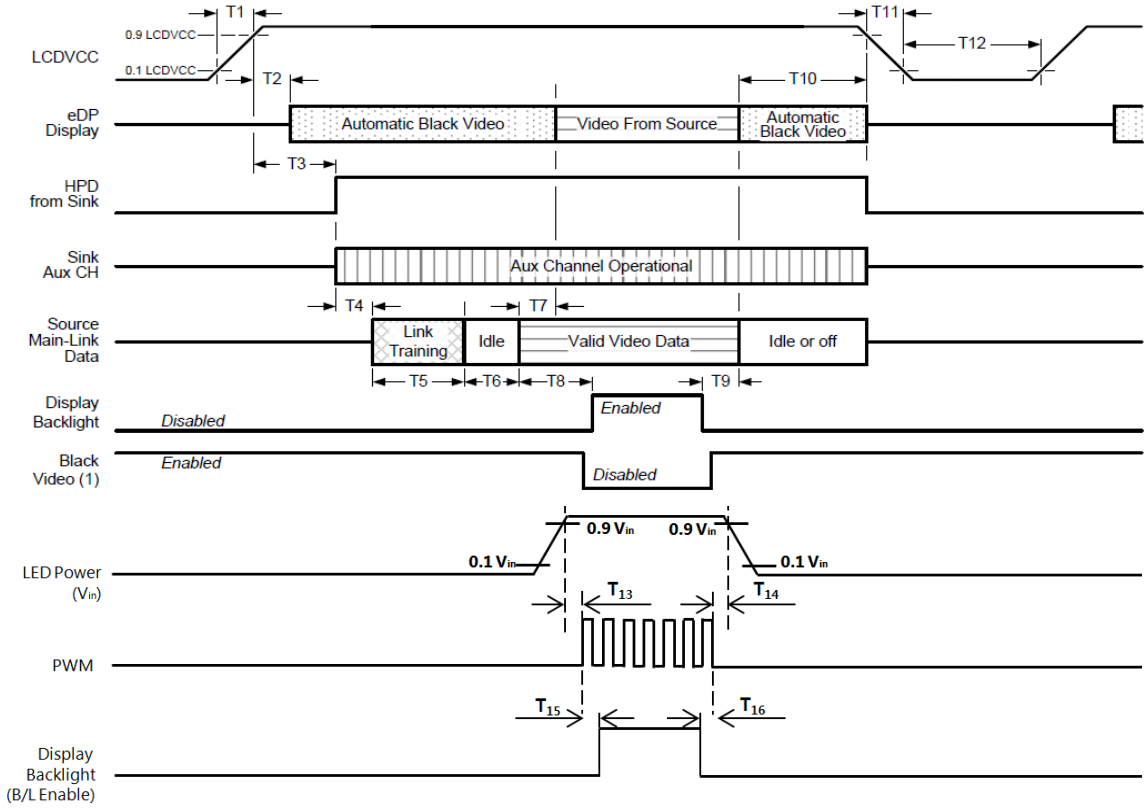

Timing (ms)	Remarks	Note
$0.5 < T_1 \leq 10$	Power rail rise time, 10% to 90%	
$0 < T_2 \leq 200$	Delay from LCDVCC to automatic Black Video generation	(1)(2)
$0 < T_3 \leq 200$	Delay from LCDVCC to HPD high	(3)
$0 \leq T_4$	Delay from HPD high to link training initialization	
$0 \leq T_5$	Link training duration	
$0 \leq T_6$	Link idle	
$0 < T_7 \leq 50$	Delay from valid video data from Source to video on display	
$0 < T_8$	Delay from valid video data from Source to backlight enable	
$0 < T_9$	Delay from backlight disable to end of valid video data	(1)(2)
$0 < T_{10} \leq 500$	Delay from end of valid video data from Source to power off	
$0 < T_{11} \leq 20$	Power rail fall time, 90% to 10%	
$150 < T_{12}$	Power off time	
$0 < T_{13}$	Interval from LED driver Vin rising time 90% to PWM ON	
$0 < T_{14}$	Interval from PWM Off to LED driver Vin falling time 90%	
$0 \leq T_{15}$	Interval from PWM ON to B/L Enable ON	
$0 \leq T_{16}$	Interval from B/L Enable Off to PWM Off	

The backlight may be flashed if the interface signal remains floated when the above-mentioned signal becomes invalid.

Note (1) The Sink must include the ability to automatically generate Black Video autonomously. The Sink must automatically enable Black Video under the following conditions:
Upon LCDVCC power-on (within T2 max)
When the "NoVideoStream_Flag" (VB-ID Bit 3) is received from the Source (at the end of T9)
When no Main Link data, or invalid video data, is received from the Source. Black Video must be displayed within 50ms (max) from the start of either condition. Video data can be deemed invalid based on MSA and timing information, for example.

(2) The Sink may implement the ability to disable the automatic Black Video function, as described in Note 1, above, for system development and debugging purposes.

(3) The Sink must support AUX Channel polling by the Source immediately following LCDVCC power-on without causing damage to the Sink device (the Source can re-try if the Sink is not ready). The Sink must be able to respond to an AUX Channel transaction with the time specified within T3 max.

5.7 INPUT TERMINAL PIN ASSIGNMENT

5.7.1 INPUT SIGNAL & POWER

(eDP, Connector: 20455-030E-02R, I-PEX or the equipment with the equivalent capability)

Pin	Symbol	Function
1	NC	APS on/off or No connection(optional)
2	H_GND	High Speed Ground
3	Lane1_N	Complement Signal Link Lane 1
4	Lane1_P	True Signal Link Lane 1
5	H_GND	High Speed Ground
6	Lane0_N	Complement Signal Link Lane 0
7	Lane0_P	True Signal Link Lane 0
8	H_GND	High Speed Ground
9	AUX_CH_P	True Signal Auxiliary Channel
10	AUX_CH_N	Complement Signal Auxiliary Channel
11	H_GND	High Speed Ground
12	LCD_VCC	LCD logic and driver power
13	LCD_VCC	LCD logic and driver power
14	BIST_EN	BIST on/off or No connection(optional)
15	LCD_GND	LCD logic and driver ground
16	LCD_GND	LCD logic and driver ground
17	HPD	Hot Plug Detect
18	BL_GND	Backlight Ground
19	BL_GND	Backlight Ground
20	BL_GND	Backlight Ground
21	BL_GND	Backlight Ground
22	BL_ENABLE	Backlight on/off
23	BL_PWM_DIM	System PWM signal input for dimming
24	NC	No connection
25	NC	No connection
26	BL_PWR	Backlight power
27	BL_PWR	Backlight power
28	BL_PWR	Backlight power
29	BL_PWR	Backlight power
30	CLR_EN	CLR on/off or No connection(optional)

6. PIXEL FORMAT

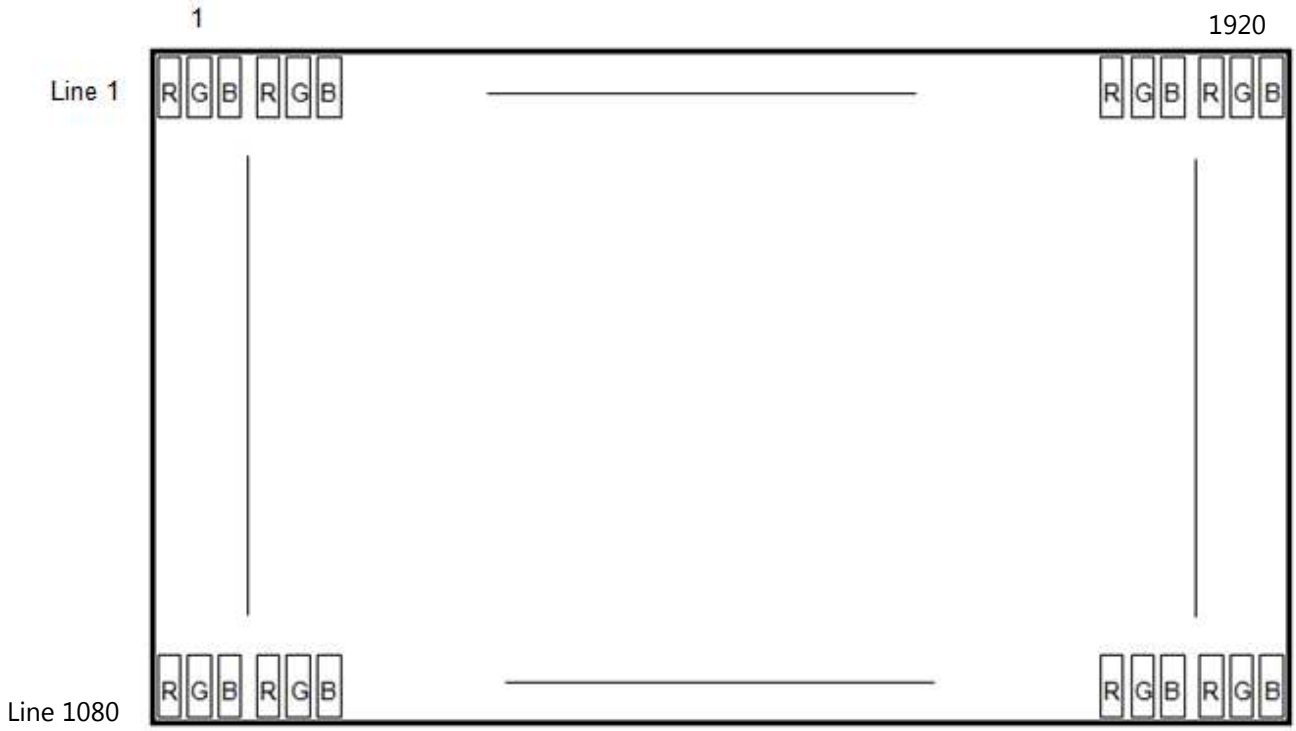

7. OUTLINE DIMENSION

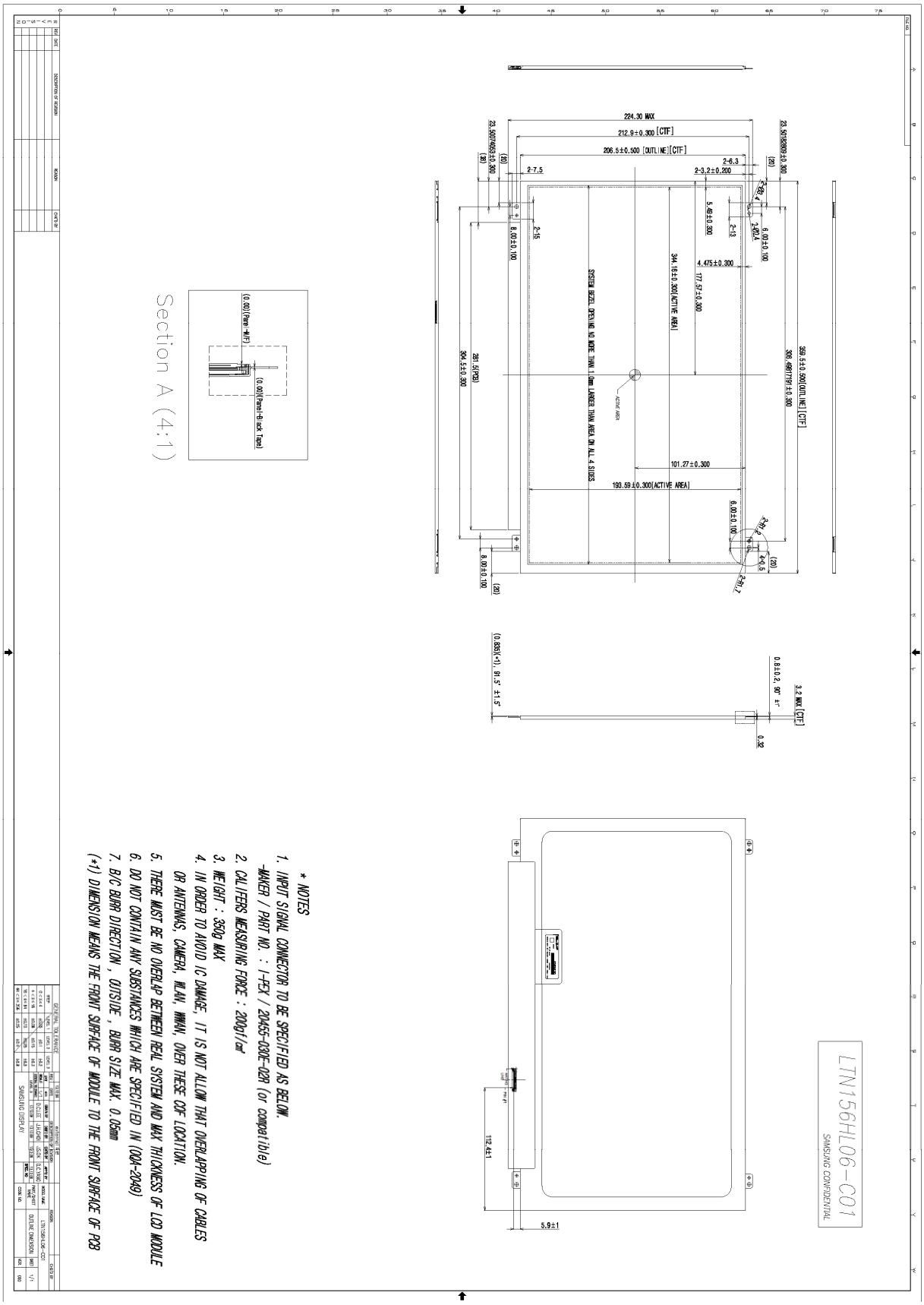

8. MARKING

A nameplate is affixed to the specified location on each product.

(1)Parts number : LTN156HL06
(2)Revision code : 3 letters
(3)Lot number : X X X X XXX XX X C01

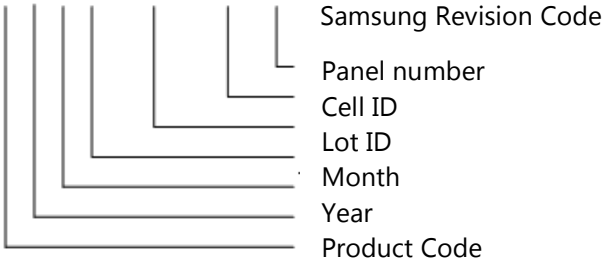

9. GENERAL PRECAUTIONS

9.1 STORAGE

We highly recommend to comply with the criteria in the table below.

ITEM	Unit	Min.	Max.
Storage Temperature	(℃)	5	40
Storage Humidity	(%rH)	35	75
Storage Life	12 months		
Storage Condition	- The storage room should be equipped with a good ventilation facility, which has a temperature controlling system. - Products should be placed on the pallet, which is away from the wall not on the floor. - Prevent products from being exposed to the direct sunlight, moisture, and water; Be cautious not to pile the products up. - Avoid storing products in the environment, which other hazardous material is placed. - If products are delivered or kept in the storage facility more than 3 months, we recommend you to leave products under the condition including a 20℃ temperature and a humidity of 50% for 24 hours. - If you store semi-manufactured products for more than 3 months, bake the products under the condition including the 50℃ temp. and the 10% humidity for 24hrs after being used.		

10. APPENDIX

Only Internal

[OPTICAL CHARACTERISTICS]

The following items are measured under the stable conditions.* The optical characteristics should be measured in the dark room or the equivalent environment by the methods shown in the Note (5).
Measuring equipment: TOPCON SR-3

Ta = 25 ± 2 °C, V_{LCD_VCC} =3.3V, fv= 60Hz, f_{DCLK} = 71.39MHz, IF = 100% duty

Item	Symbol	Condition	Min.	Typ.	Max.	Unit	Note
Flicker	F		-	3.2	5.2		(8)

Note (8) The definition of flicker: The phenomenon, which the pixel on the screen of LCD panel blinks.
1) Calculate the figure with observing the standard for the measurement for the flicker.
2) Measurement point

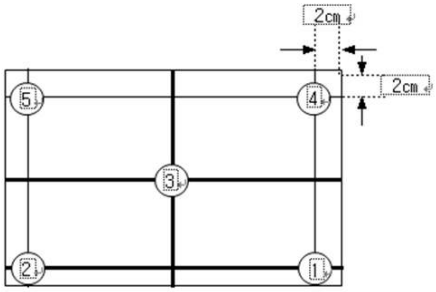

3) Pattern to measure the flicker: Inverting driving of DOT

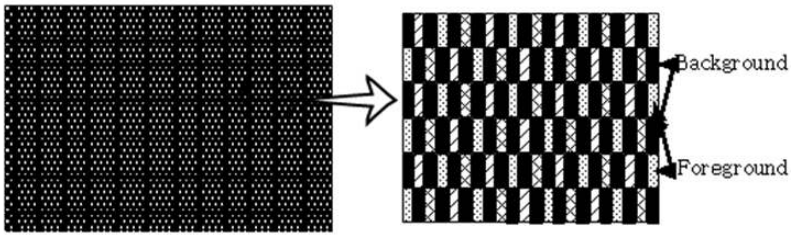

[LED DRIVER]

The manufacturer of LED driver: Richtek RT8561D Ta= 25 ± 2 °C

Item	Symbol	Min.	Typ.	Max.	Unit	Note
OVP driving Voltage	V_{OVP}	-	-	38.8	V	

[ELECTRICAL CHARACTERISTICS]

TFT LCD MODULE

Ta = 25 ± 2 °C

Item		Symbol	Min.	Typ.	Max.	Unit	Note
Power Supply Voltage Ripple	Active Period	$V_{LCD\_VCC\_RIPPLE}$	-	-	0.05 * V_{LCD_VCC}	V	(1)

Note (1) f_V = 60Hz, f_{DCLK} = 71.39MHZ V_{LCD_VCC} = 3.3V, Sub Dot Pattern