ALR267FGX

6.26 cm (2.5 inch) 862 X 240 dots

* This specification is tentative and subject to change without notice. Please contact us when you use this module on your production.

Overview

This low power consumption 2.5 inch low temperature poly-silicon TFT-LCD module is suitable for monitors of digital still camera.

Features

- Diagonal 6.26 cm (2.5 inch) display size.
- 862 x 240=206,880 dots.
- Transflective type (Optimized for transmission)
  When it is transmissive, it is similar to previous transmissive type.
  A high level of visibility in outdoor.
- RGB delta color arrangement.
- Preferred viewing angle ; 6 o'clock (FPC is bottom).
- Polarizer ; AR coat and Film.
- Low power consumption by common inversion drive built-in negative power supply generator and gate level shifter.
- Up/down and right/left inverse function.
- Built-in level shifter circuit.
- V240 lines high-fineness, Viewing ratio 100%
- Narrow frame design, thin backlight.
- Recommended IC ; LC15009 / LC15016(Built-in DC/DC, Non-adjustment system, Full digital)
- Operating temperature (panel surface) ; -10 to +60ºC.
- Storage temperature ; -20 to +70ºC.
- BL is Harnessless type (Option ; built-in harness).

Specifications

Item	Specifications	Unit	Remarks
Dot count (H)x(V)	862 x 240	dot	
Active area dimensions (H)x(V)	50.025 x 37.56	mm	
Display size (diagonal)	6.26 (2.46 inch)	cm	
Dot pitch (H)x(V)	0.058 x 0.1565	mm	
Color arrangement	RGB Delta	-	
Module external dimensions (W)x(H)x(D)	TYP. 57.16 x 48.05 x 3.036	mm	Note1
FPC length	TYP.19.97	mm	
Weight	About 17.7	g	

*Note1 : Excluding flexible cable and projections but including polarizer thickness for depth.
(Please refer to the package dimensions on the last page.)

Absolute Maximum Ratings at VSS = 0V

Item	Symbol	Ratings	Unit
H driver power supply voltage	HVDD	-1.0 to +10	V
V driver power supply voltage	VVDD	-1.0 to +10	V
V driver negative power supply voltage	VBB	-10.0 to +1.0	V
Common electrode voltage	COM	-1.0 to +10	V
Storage capacity voltage	SC	-1.0 to +10	V
Scan direction control signal voltage	CSH,CSV	-1.0 to +10	V
H driver/Drain storage circuit input signal voltage	STH,CKH1,CKH2,DSG	-1.0 to +10	V
V driver input signal voltage	STV,CKV,ENB	-1.0 to +10	V
Video signal/Drain storage data signal input voltage	G, R, B, DSD	-1.0 to +8.0	V

Item	Symbol	Ratings	Unit
Operating temperature (panel surface)	Topr	-10 to +60*1	deg.
Storage temperature	Tstg	-20 to +70*1	deg.
Backlight input current	I f	25*2	mA

*1 Do not produce dew and make the wet bulb temperature in the condition of 39ºC or below.
*2 Ta=25ºC

Operating Conditions VSS=0V

Item	Symbol	MIN	TYP	MAX	Unit
Power supply voltage	HVDD	8.2	8.5	8.8	V
	VVDD	8.2	8.5	8.8	V
VBB output voltage	VBB	-4.5	(-4.0)	-3.5	V

Negative Power Supply Generater

To stabilize VBB output voltage, VBB should be tied VSS through a zener diode with smoothing capacitor as the following diagram.

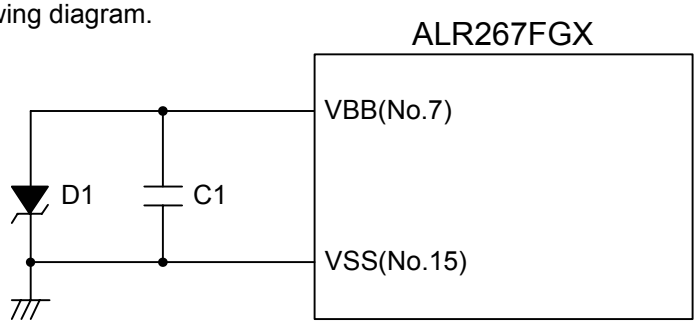

	Capacitance [μF]	Rating voltage	Capacitance tolerance
C1	0.47	16VDC and more	+80% and less, -20% and more

D1	RD5.1S-B2 or RD5.1UM-B2 (NEC makes) or the corresponding products

Input Signal

Item		Symbol	MIN	TYP	MAX	Unit
H driver/Drain storage circuit input signal voltage	Low	VHIL	-0.3	0.0	0.3	V
	High	VHIH	2.5	3.0	4.0	V
V driver input signal voltage	Low	VVIL	-0.3	0.0	0.3	V
	High	VVIH	2.5	3.0	4.0	V
H scan control signal voltage	Low	VHSIL	VSS	-	VSS+0.2	V
	High	VHSIH	HVDD-0.2	-	HVDD	V
V scan control signal voltage	Low	VVSIL	VSS	-	VSS+0.2	V
	High	VVSIH	VVDD-0.2	-	VVDD	V
Video signal center voltage	digital I/F	VVC	2.55	2.75	2.95	V
Video signal voltage (digital I/F)	Black(H)	Vblack(H)	(4.30)	4.50	4.70	V
	Black(L)	Vblack(L)	0.80	1.00	(1.20)	V
	White-Black	Vsig w-b	-	-	2.70	V
Common electrode signal center voltage	digital I/F	VCOM c	(VVC−0.25) −0.1	VVC-0.25	(VVC−0.25) +0.1	V
Common electrode voltage amplitude	digital I/F	VCOM p-p		3.5	3.6	V
Storage capacity center voltage		VSC c	-	VCOM c	-	V
Storage capacity voltage amplitude		VSC p-p	-	VCOM p-p	-	V
Drain storage data signal voltage		VDSD	VVC-0.2	VVC	VVC+0.2	V

White LED backlight input current/voltage conditions

Item	MIN	TYP	MAX	Unit
Forward current	19.5	20.0	20.5	mA
D.C. voltage (Constant current : 20mA)	12.0	14.0	16.0	V

Power consumption

Item	Symbol	Condition	MIN	TYP	MAX	Unit
Panel power consumption (NTSC)	PWR		-	39.1	51.0	mW
Backlight power consumption		Constant current 20mA	-	280	-	mW

Optical Specifications (Ta=25ºC, θ= 0°, SANYO standard measurement system)

<Reflective mode>

Item	Symbol	Measurement	MIN	TYP	MAX	Unit
Contrast ratio	CR	I	-	10	-	-
Reflectance	R	I	-	1.0	-	%

<Transmissive mode> (Used Backlight: White LED)

Item	Symbol	Measurement	MIN	TYP	MAX	Unit
Contrast ratio	CR	II	70	100	-	-
Luminance	L	II	180	230	-	cd/m^2

Measuring system 1

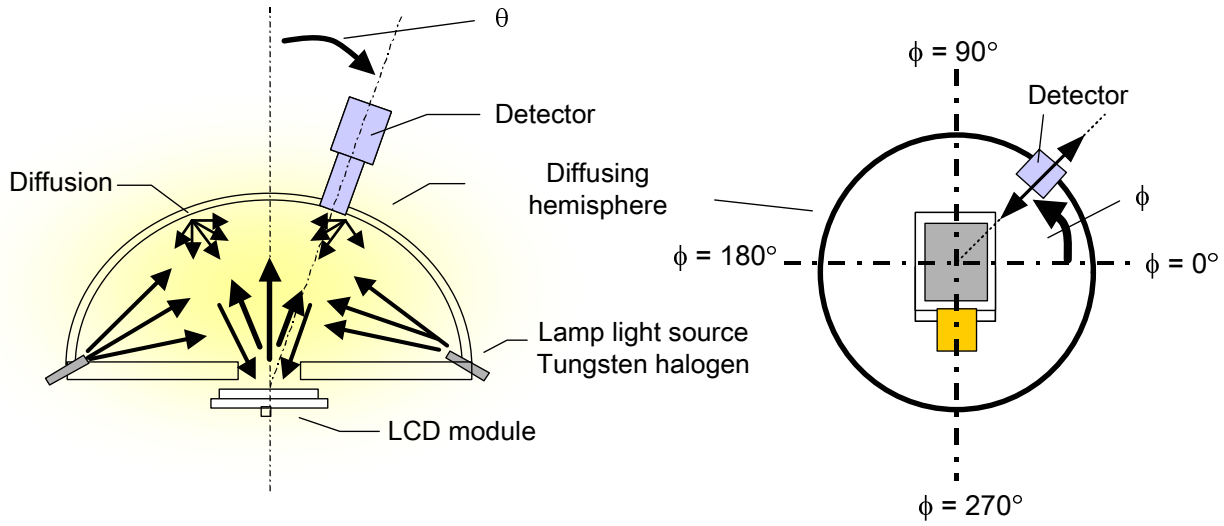

Standard: Diffusion white board

Measuring system 2

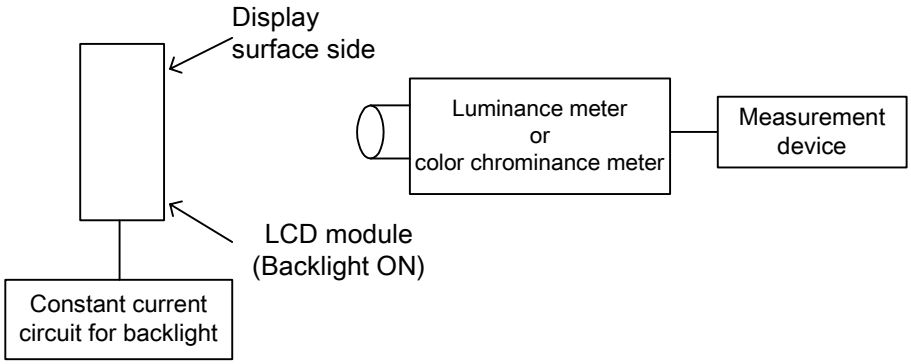

Pin Function

No.	Symbol	Function
1	COM	Common electrode voltage
2	CKV	V driver clock
3	STV	V driver start signal
4	VVDD	Power supply for V driver
5	ENB	Enable signal
6	CSV	Up/down scan control signal (H:Normal scan, L:Reverse scan)
7	VBB	V driver setting negative power supply
8	SC	Storage capacity voltage
9	DSD	Drain storage data signal
10	DSG	Drain storage gate signal
11	B	Video signal (B)
12	R	Video signal (R)
13	G	Video signal (G)
14	CSH	Right/left scan control signal (H:Normal scan, L:Reverse scan)
15	VSS	VSS for V and H driver
16	STH	H driver start signal
17	HVDD	Power supply for H driver
18	CKH1	H driver clock1
19	CKH2	H driver clock2

Backlight Pin Function

No.	Symbol	Function
1	Anode	INPUT (+)
2	Cathode	GND (-)

System Configuration

- digital YCrCb

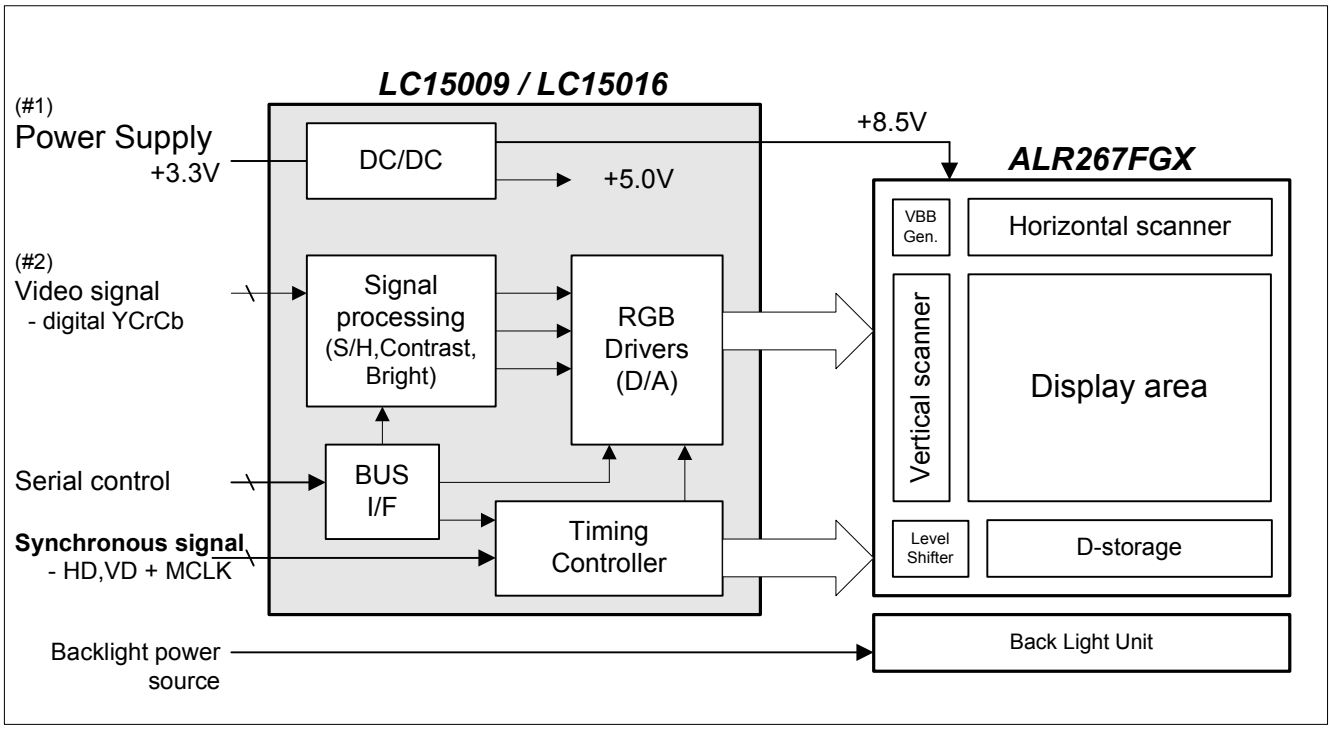

Full digital, Non-adjustment system

(#1) Single power supply drive (built-in DC/DC)

(#2) ITU-R601 27MHz YCrCb=4:2:2 input

Package Dimension