LCD MODULE SPECIFICATION
FOR CUSTOMER'S APPROVAL

CUSTOMER :

MODULE TYPE : CLX-8102S-C3X

APPROVED BY:(FOR CUSTOMER USE ONLY)

APPROVED BY	CHECKED BY	PREPARED BY	CPT FILE NO.	DATE ISSUED
		Densitron Technologies PLC LCD		

Densitron Technologies PLC Copyright

1. GENERAL SPECIFICATIONS

Item	Contents
Display Contents[pixels]	640(W)x480(H)
Dimensional Outline[mm]	252.5(W)x178.0(H)x10.0 max(D)
Display mode	Transmissive Type (Viewing Direction 12 o'clock)
Surface Treatment	Anti-glare with hard coat on LCD surface
Circuits	X-Driver,Y-Driver
Interface	Data(UD_0~UD_7,LD_0~LD_7),SCP,FP,LP

2. ABSOLUTE MAXIMUM RATINGS

Item	Symbol	Absolute Maximum Ratings		Unit
		min	max	
Supply Voltage	V_{DD}	0	6	V
	V_{EE}	0	35	
FL Driving Voltage(1)	V_{FL}	0	1,500	Vrms
Input Voltage (Data,SCP,LP,FP)	V_{IN}	-0.3	V_{DD}+0.3	V
Storage Temperature(2)	Tstg	-20	60	℃
Operation Temperature(2)	Top	0	50	℃
Humidity(2)	-	10	90	%RH

Note(1): One minute max.

Note(2): Wet bulb temperature should be 29℃ max., and no condensation of water is allowed.

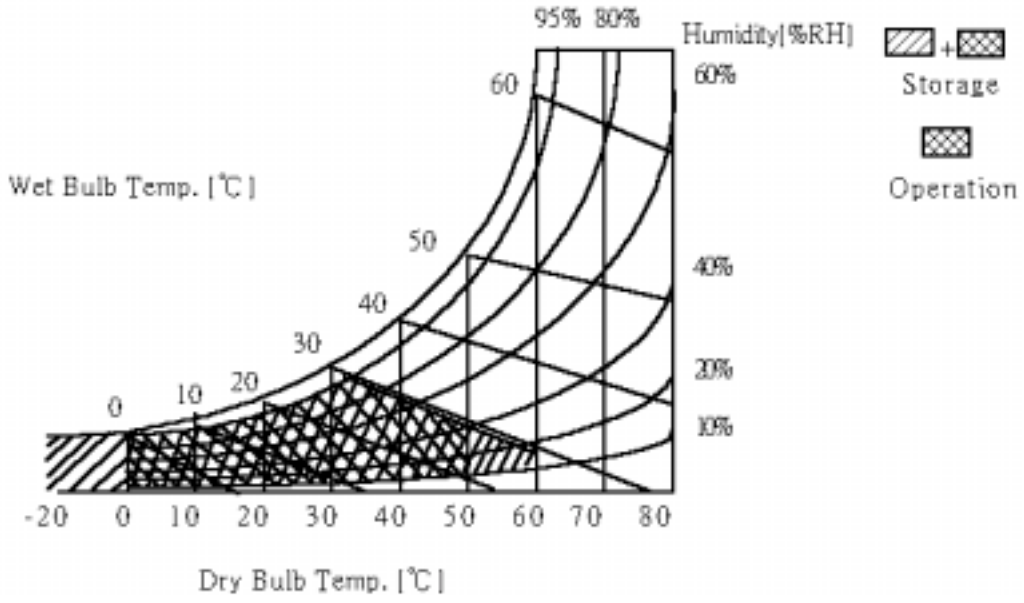

Densitron Technologies PLC Copyright

3. ELECTRICAL SPECIFICATION (Condition : Ta=25℃)

Item	Symbol	Conditions	Specifications			Unit
			min	typ	max	
Supply Voltage	V_{DD}	-	4.75	5.0	5.25	V
	V_{EE}	-	24.5	25.5	26.5	
FL Driving Voltage	V_{FL}	-	450	475	500	Vrms
FL Input Current(3)	I_{FL}	-	3.0	5.0	6.0	mArms
FL Starting Voltage(4)	V_{FLS}	Ta=0℃	1000	-	-	Vrms
Input Voltage (Data,SCP,LP,FP)	V_{IH}	V_{DD}=5V	$0.8V_{DD}$	-	-	V
	V_{IL}		-	-	$0.2V_{DD}$	
Current consumption (Typical case)	I_{DD}	ALL ON	-	11.5	24.0	mA
	I_{EE}		-	5.0	8.5	
Current consumption (Maximum case 1)	I_{DD}	H Stripe	-	12.0	25.0	mA
	I_{EE}		-	18.0	27.0	
Current consumption (Maximum case 2)	I_{DD}	RED	-	36.5	74.0	mA
	I_{EE}		-	9.5	19.5	
Power consumption	-	V_{DD}=5V V_{EE}=25.5V I_{FL}=5mArms	-	2.6	3.5	W

Note(3):Life time of backlight will change according to the FL input current.
Note(4):FL Starting Voltage should be 1400 Vo-p min..

Power Supply for Contrast Control

Contrast control power supply V_{EE} shall be variable for contrast, viewing angle control and temperature compensation. Recommended V_{EE}(typical value) is as follows at each temperature.

temperature(℃)	V_{EE}(V) (typ)
0	28.5
25	25.5
50	23.5

Densitron Technologies PLC Copyright

4. MECHANICAL SPECIFICATIONS

Item	Specifications	Unit	Note
Display Contents	640(W)×480(H)	-	Ref .page 7
Pixel Pitch	0.30(W)×0.30(H)	mm	Ref .page 7
Pixel Size	0.29(W)×0.29(H)	mm	Ref .page 7
Dimensional Outline	252.5(W)×178.0(V)×10.0 max(D)	mm	Ref .page 5
Viewing Area	196.0(W)×147.0(H)	mm	Ref .page 5
Active Area	191.99(W)×143.98(H)	mm	Ref .page 5
Weight	510(typ.)	g	-

5. OPTICAL SPECIFICATION(5)

(Ta=25℃. V_{DD}=5.0V,V_{EE}:At the voltage for K_{MAX} between 24.5V and 26.5V.)

Item	Symbol	Conditions	Specifications			Unit
			min	typ	max	
Viewing Angle(6)	θ_U	φ=0°, K≧2.0	15	-	-	deg.
	θ_H	φ=180°, K≧2.0	30	-	-	
Contrast Ratio(7) **(at Black & White pattern)**	Kmax	φ=0°, θ=0°	10	18	-	-
Response time(8)	t_{ON}	φ=0°, θ=0°	-	200	350	ms
	t_{Off}		-	100	200	
Luminance(9)(10) (at White pattern)	L	φ=0°, θ=0° I_{FL} = 5.0 mArms	40	60	-	cd/m^2
Luminance Uniformity(11) (at White pattern)	-	φ=0°, θ=0° I_{FL} = 5.0 mArms	65	-	-	%

Densitron Technologies PLC Copyright

Note(5):Definition of φ, θ_H and θ_U

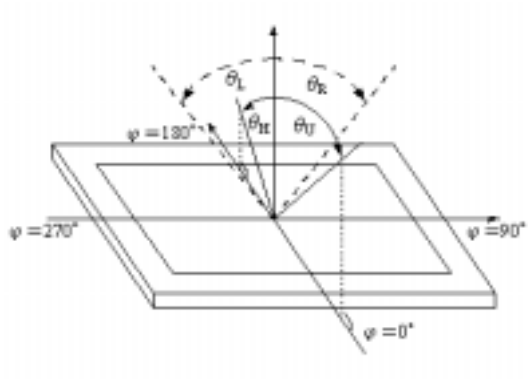

Note(6):Definition of Viewing Angle
Contrast ratio larger than 2.0 can be obtained by adjusting the V_{EE} value.

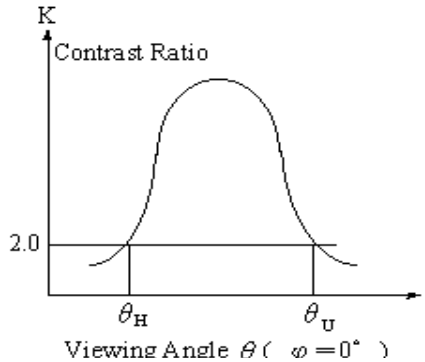

Note(7):Definition of Contrast Ratio

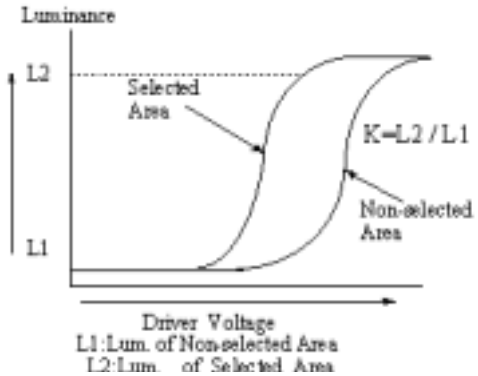

Note(8):Definition of Turn ON time and Turn OFF time.

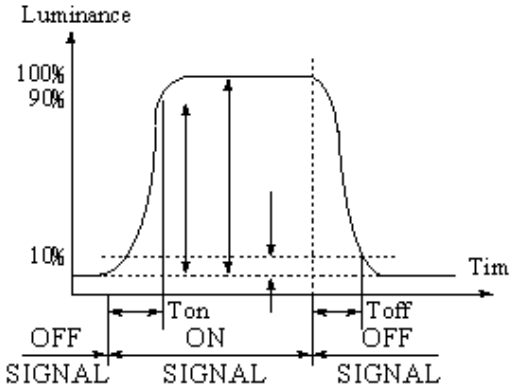

Note(9):Luminance of the LCD surface is measured in the dark room.
And luminance is measured after 20 minutes for FL turn on. and adjusted to best contrast.

Note(10):FL inverter:CXA-M10L (TDK CORP.)

Note(11):Luminance(L)is measured at 9 points as follows, and luminance uniformity is defined by Lmin/Lmax

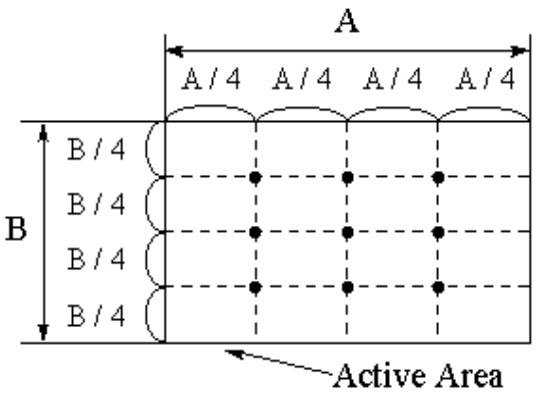

Densitron Technologies PLC Copyright

6.1 OUTLINE DIMENSIONS

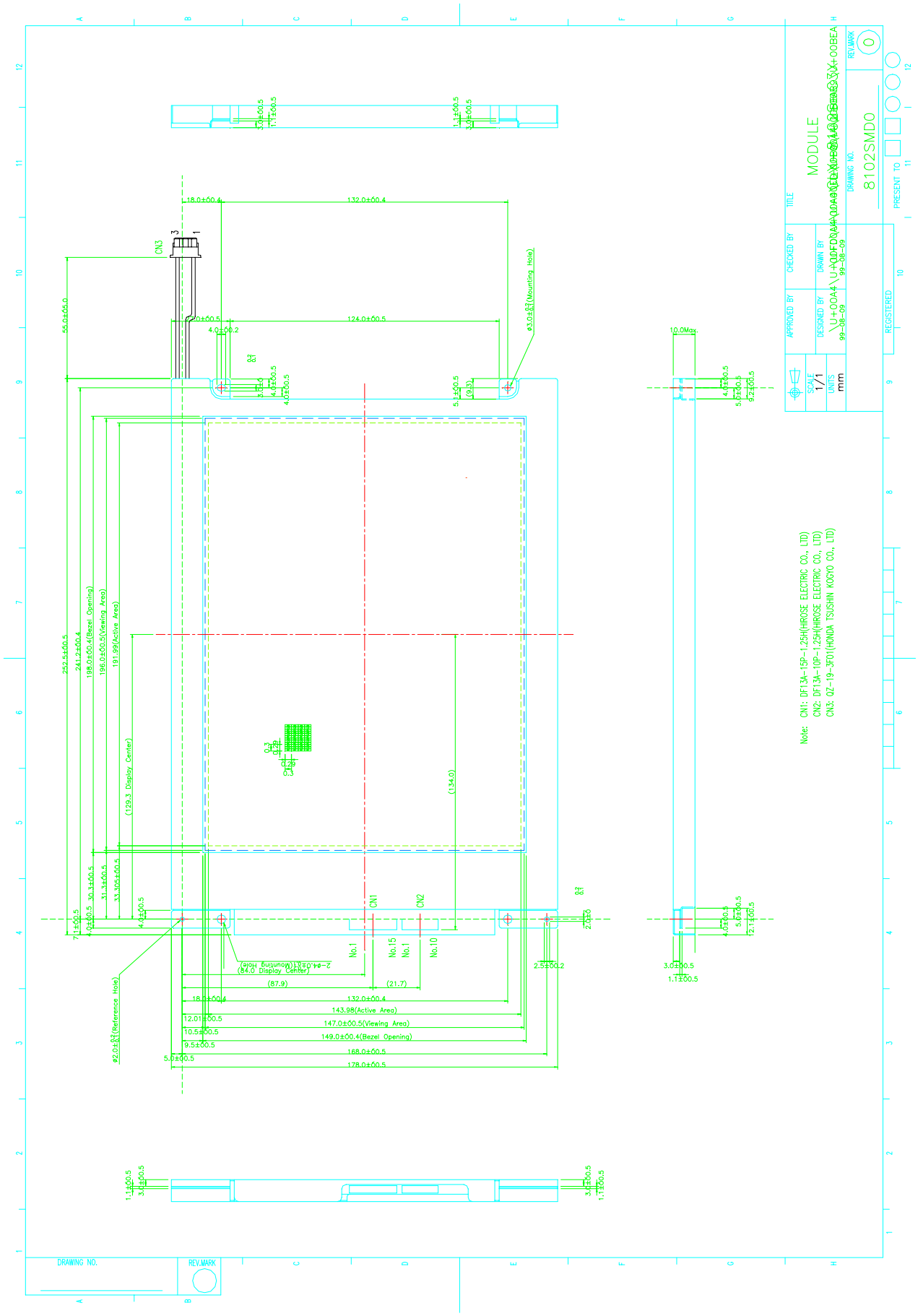

Densitron Technologies PLC Copyright

6.2 DISPLAY SIZE

Unit:mm

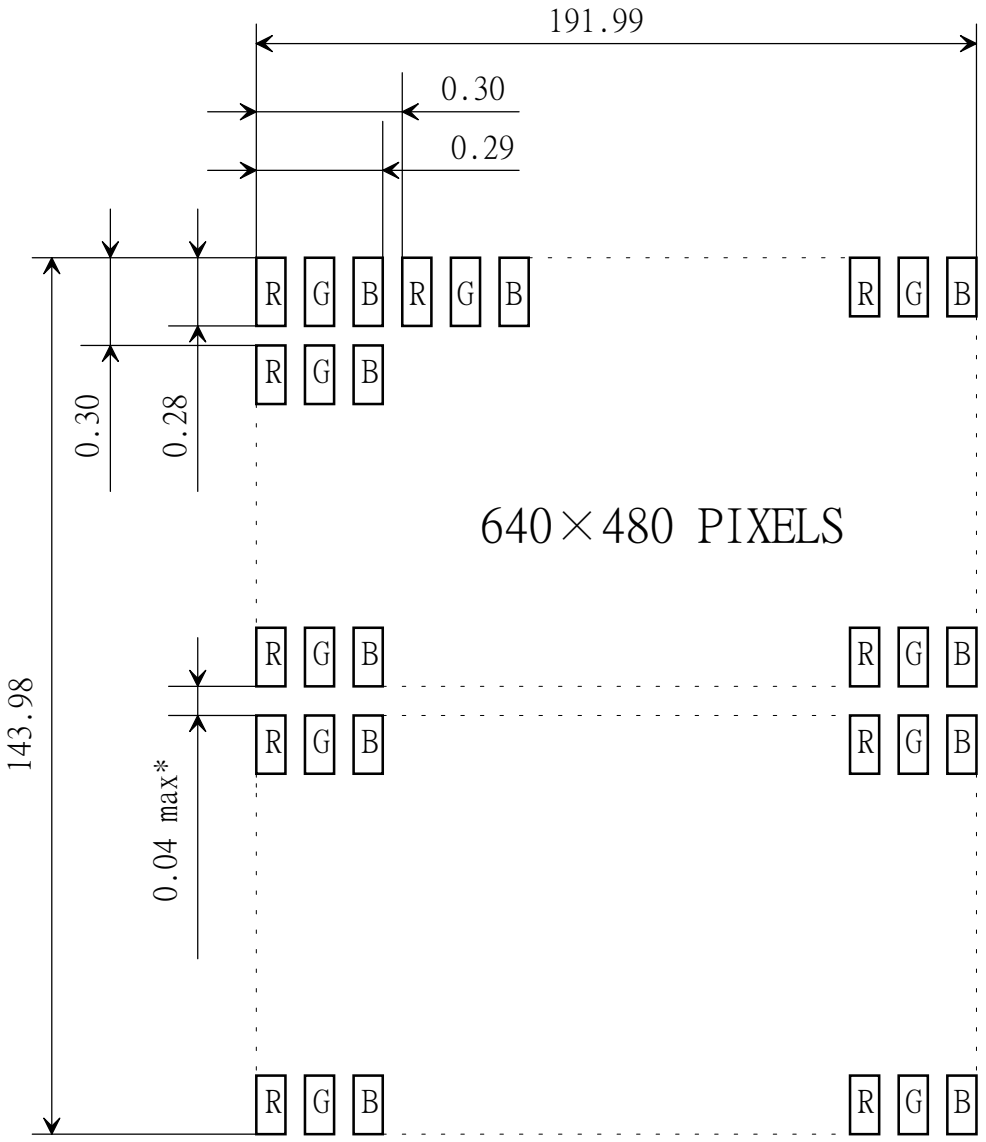

* : Separate line (Between 240th and 241th line)

Densitron Technologies PLC Copyright

7. INTERFACES

7.1 Interface Pin Assignment

Connector 1(Hirose Electric Co. Ltd. DF13A-15P-1.25H)

Pin No.	Signal	Function
1	FP	Frame Pulse
2	LP	Latch Pulse in one line
3	SCP	Shift Clock Pulse for X-Drivers
4	DISP	Sequence Signal of Power Supply("L":OFF)
5	V_{DD}	Power Supply for Logic(+5V)
6	GND	Ground (0 V)
7	VEE	Power Supply for Contrast Control
8	UD0	Data Input for Upper Screen(LSB)
9	UD1	Data Input for Upper Screen
10	UD2	Data Input for Upper Screen
11	UD3	Data Input for Upper Screen
12	LD0	Data Input for Upper Screen
13	LD1	Data Input for Upper Screen
14	LD2	Data Input for Upper Screen
15	LD3	Data Input for Upper Screen(MSB)

Mating Connector:DF13-15S-1.25C(Hirose Electric Co. Ltd.)
Contact:DF13-2630SC/100pin(DF13-2630SCF/10000pin/1 reel)

Connector 2(Hirose Electric Co. Ltd. DF13A-10P1.25H)

Pin No.	Signal	Function
1	GND	Ground (0 V)
2	LD0	Data Input for Lower Screen(LSB)
3	LD1	Data Input for Lower Screen
4	LD2	Data Input for Lower Screen
5	LD3	Data Input for Lower Screen
6	LD4	Data Input for Lower Screen
7	LD5	Data Input for Lower Screen
8	LD6	Data Input for Lower Screen
9	LD7	Data Input for Lower Screen(MSB)
10	GND	Ground (0V)

Contact:DF13-2630SC/100pin(DF13-2630SCF/10000pin/1 reel)

Densitron Technologies PLC Copyright

Pin No.	Signal	Function
1	V_{FL}	Power Supply for FL(Hot)
2	NC	No Connection
3	V_{FLG}	Power Supply for FL(Ground)

Densitron Technologies PLC Copyright

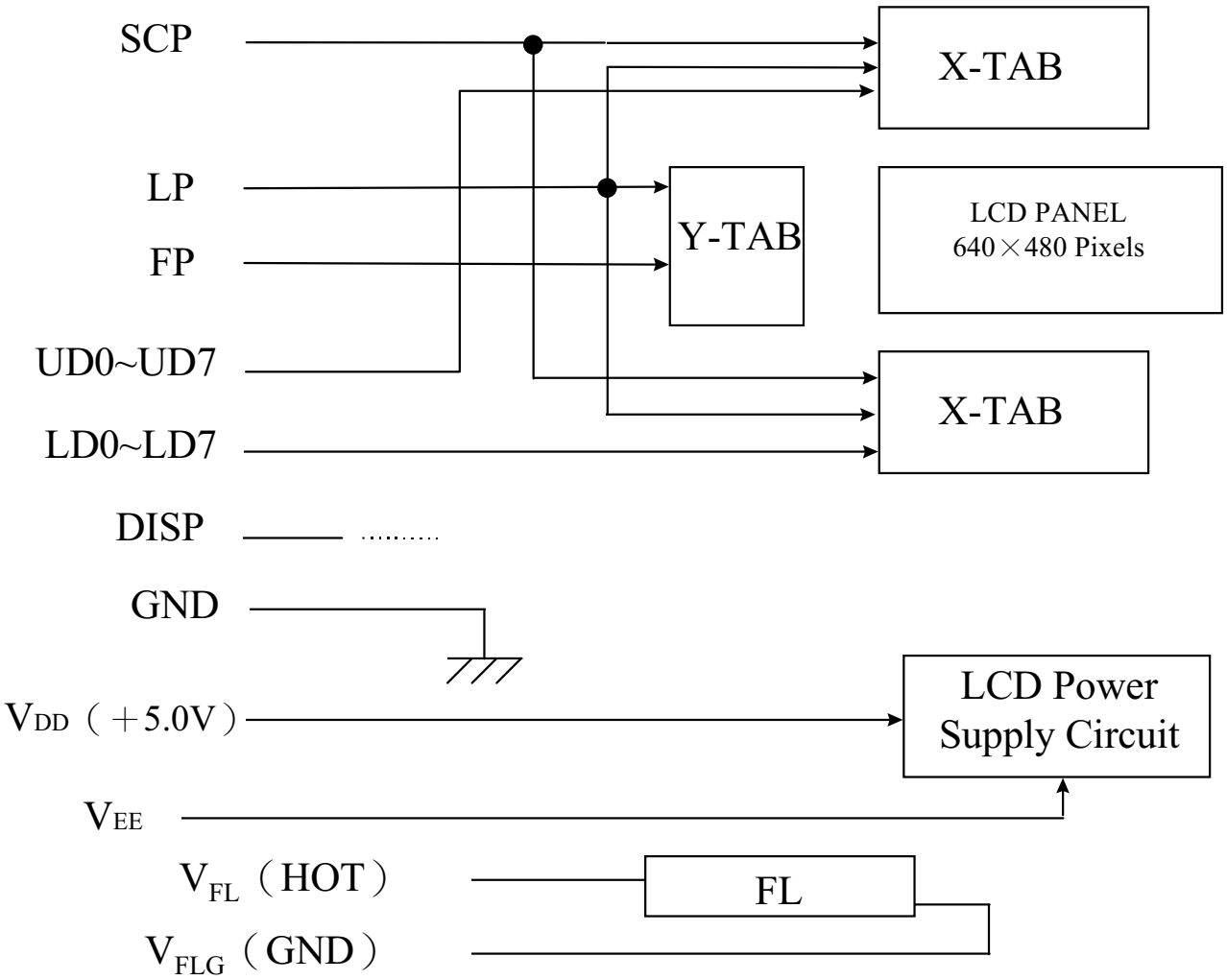

Densitron Technologies PLC Copyright

7.3 TIMING SPECIFICATIONS

ITEM	SYMBOL	SPECIFICATIONS			Unit
		MIN	TYP	MAX	
Clock Cycle	tc	66	-	-	ns
SCP Pulse Width(H)	t_{CWH}	23	-	-	ns
SCP Pulse Width(L)	t_{CWL}	18	-	-	ns
SCP Rise/Fall Time	tr , tf	-	-	Note(15)	ns
Data Set Up Time	t_{DSU}	30	-	-	ns
Data Hold Time	t_{DHD}	30	-	-	ns
LP Rise Time	t_{LRP}	40	-	-	ns
LP Fall Time	t_{LFP}	40	-	-	ns
LP Pulse Width	t_{LWH}	30	-	-	ns
SCP to LP Delay Time	t_{SL}	10	-	-	ns
LP to SCP Delay Time	t_{LS}	40	-	-	ns
FP Set Up Time	t_{FSU}	110	-	-	ns
FP Hold Time	t_{FHD}	40	-	-	ns
FP Frequency	f_{FP}	60	72	145	HZ

Note(15): tr,tf < (tc - t_{CWH}-t_{CWL}) / 2 and tr,tf < 50ns

Note(16): FP frequency should be determined as display flickering is not seen.

Definition of Timing

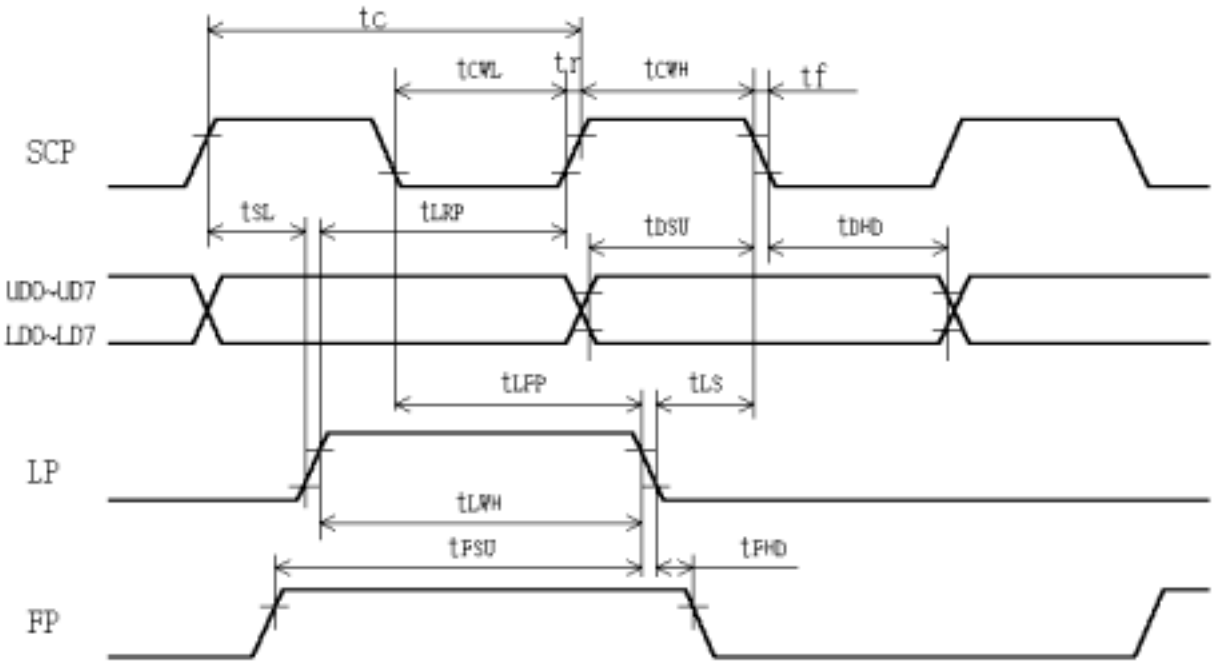

Densitron Technologies PLC Copyright

7.4 TIMING CHART

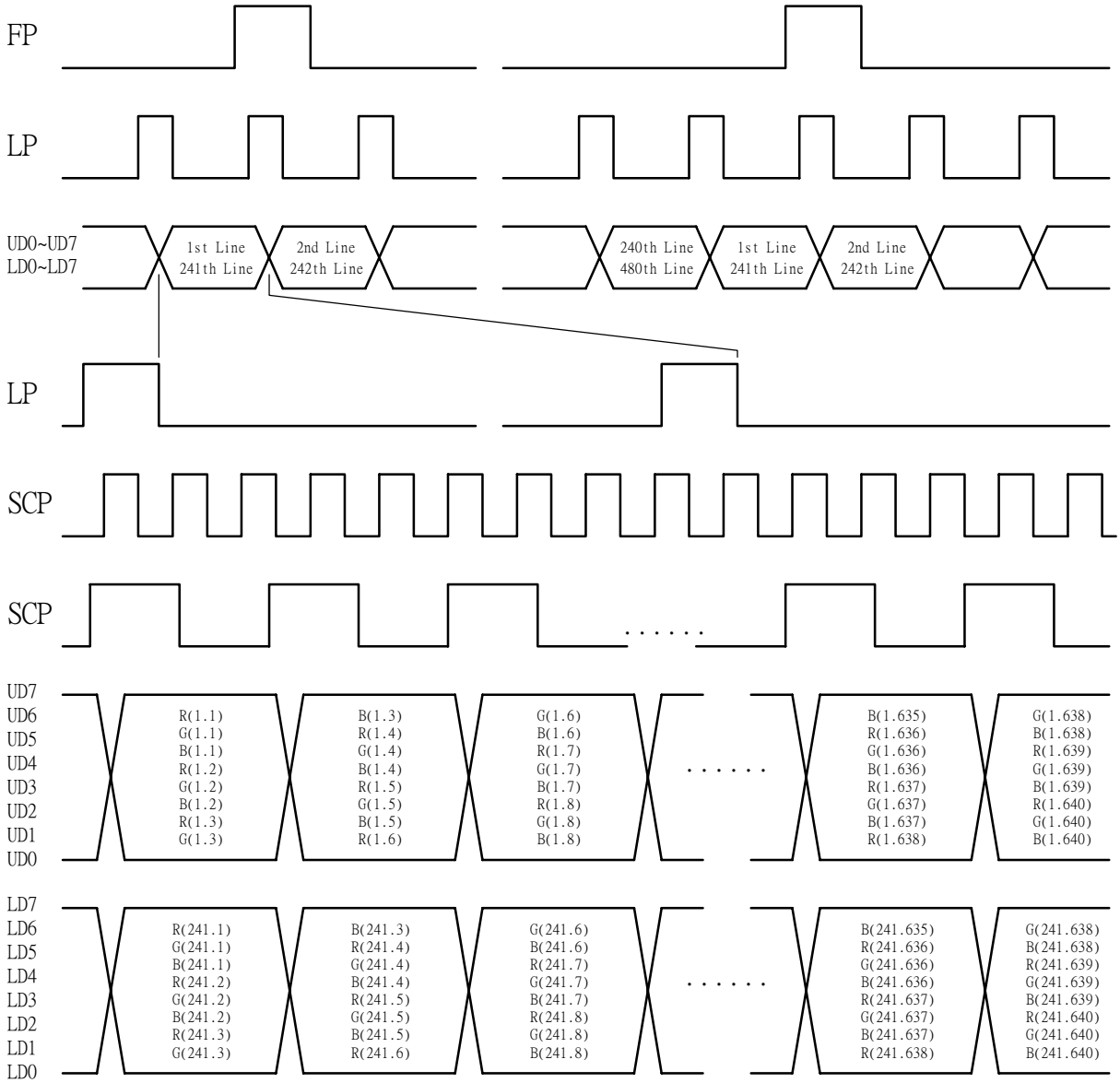

Densitron Technologies PLC Copyright

7.5 DATA MAP

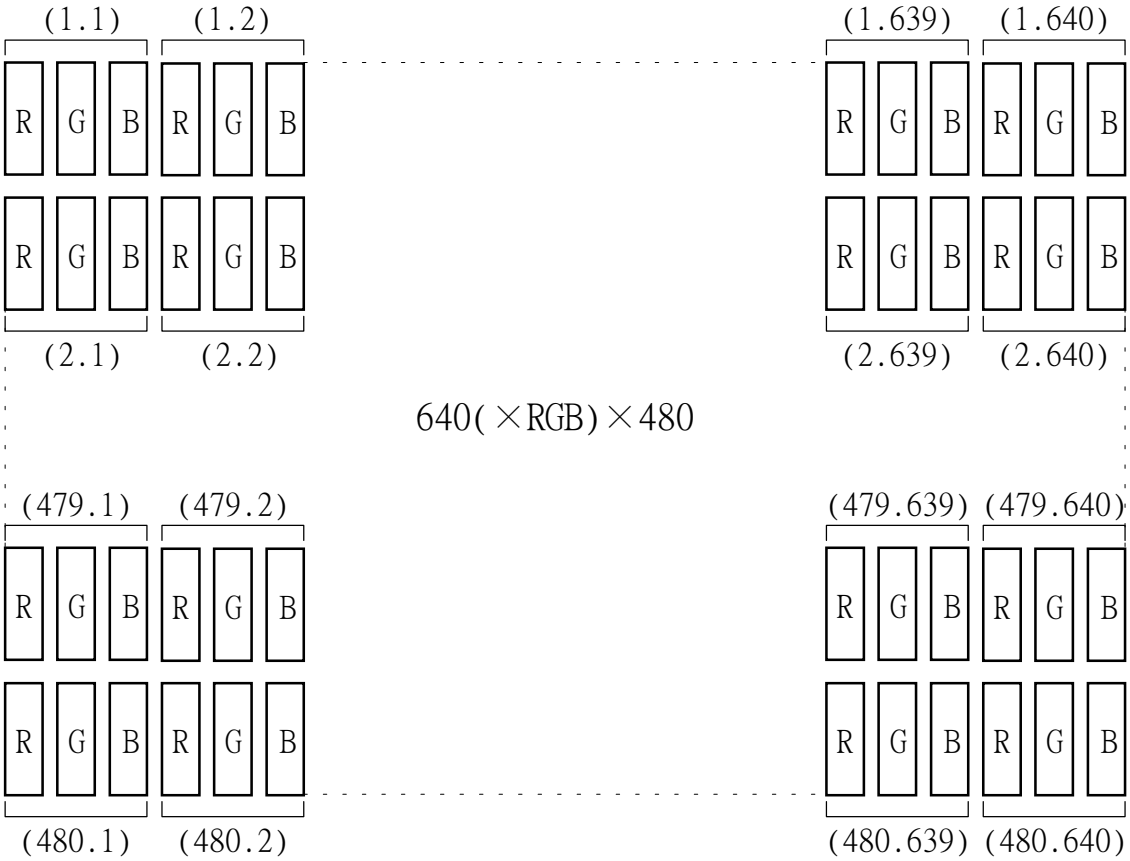

Densitron Technologies PLC Copyright

8. MARKING

Following should be marked on the each module.

Type Number
Manufacturer's name(CPT)
Country of origin
Manufacturing lot number

9. QUALITY

9.1 TEST CONDITIONS

Ambient temperature : 25±5℃
Humidity : 65±20%RH
Illumination :

Visual inspection shall be performed under the single fluorescent lamp(20W) with about 50 cm distance from LCD module by naked eyes with 30 cm distance from LCD module.
Viewing angle for inspection should be within viewing angle specified in this specification. Defects which is visible only in the surface glare shall be disregarded.

Operating conditions :

Unless otherwise specified LCD module shall be operated by the ration value(typical value).

9.2 DIMENSIONS

Item	Description	Class
Important Dimensions	Dimensional outline. Dimension between the mounting holes.	Major
Others	Dimensions specified in this specification	Minor

Densitron Technologies PLC Copyright

9.3 APPERANCES

Item	Description	Class
PCB Appearance	*Pattern peeling , snapping , electrically short.	Major
	*Conductive pattern missing or pinhole larger than 30% of original width. *Repair portion on PCB does not covered by epoxy resin.	Minor
Soldering	*Cold solder joint, lead move when pulled.	Major
	*Misallignment of pad and lead of flat package LSI (larger than 1/2 width of LSI lead).	Minor
Bezel connectors	*Distinct stain , rust or scratch.	Minor
Black and White spots / lines Contrast spots / lines	Dust, foreign materials attached on the display surface is defined as "Black and White spot/lines" or "Contrast spots/lines" in 9.4. If these material is easily wiped off, they should be disregarded.	Minor
Display color / Newton ring	*Distinct display color unevenness and newton ring.	Minor

Densitron Technologies PLC Copyright

9.4 OPERATIONS

ITEM	DESCRIPTIONS	CLASS
Function	No display. Malfunction	Major
Display Quality	Missing Line, missing pixel	Major
	Pinhole/pattern deformation larger than 0.3 mm	Minor
	Abnormal flickering/Waving observed	Minor
Uniformity	Uniformity of background/display	Minor
Black, White and Bright spots / line Note(17)	*Average diameter(mm) Acceptable No. D≦0.2 neglect 0.2＜D≦0.3 N≦5 0.3＜D N＝0 *Line width(mm) Length(mm) W≦0.03 neglect 0.03＜W≦0.05 L≦2 0.05＜W≦0.07 L≦1	Minor
Contrast spots/lines (low contrast spots/lines, defects of reflector) Note(17)	*Average diameter(mm) Acceptable No. D≦0.5 good 0.5＜D≦1.0 N≦5 1.0＜D N＝0 *Contrast line width (mm) Length(mm) Acceptable No. W≦0.05 neglect good 0.05＜W≦0.07 L≦2.0 N≦5	Minor
Current Consumption	Out of specifications	Minor
Contrast ratio / viewing angle	Out of specifications	Minor
Response time	Out of specifications	Minor
Backlight	No backlight	Major
	Uniformity of backlight brightness	Minor
Separate Line	0.04 mm max (refer to page 7)	Minor

Note(17) : Average diameter D is defined as follows:

$$D = \frac{a + b}{2} \text{ [mm]}$$

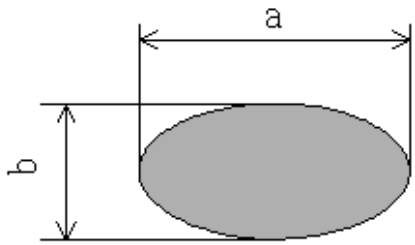

Densitron Technologies PLC Copyright

10. RELIABILITY

The LCD module shall have no failure in the following reliability tests.

Test item	Test Conditions	Note
High Temperature storage	60℃, 200hrs	19
Low Temperature storage	-20℃, 200hrs	19
Humidity Storage	60℃, 93%RH, 800hrs	18,19
High temperature operation	50℃, V_{DD}=5.0V, 400hrs	19
Low temperature operation	0℃, V_{DD}=5.0V, 400hrs	18,19
temperature cycling	-20℃—60℃ 50 cycles	18,19
mechanical shock	70G, 11ms X,Y,Z each direction(1 time)	-
mechanical vibration	10 to 300 to 10 Hz sweep , 0.5G X,Y,Z each direction(3 cycles)	-

Note(18). The module should not have condensation of water on it.
Note(19). The module should be inspected after 1 hour storage under normal conditions (15℃ to 35℃, 45 to 65%RH)

Definitions of life end point
(1)Current consumption is more than specified value.
(2)Function of the module is not maintained.
(3)There is visible degradation of appearance and display quality.
(4)Contrast ratio is less than 50% of specified minimum value.
(5)Brightness is less than 50% of specified minimum value.

MTTF : LCD Module 50000hr (typ)
FL Backlight 10000hr (typ)

Conditions : Ta=25℃, Humidity=65±20%RH
V_{DD}=5V, V_{EE} = 24.5~26.5V
I_{FL}=5.0 mArms

Densitron Technologies PLC Copyright

11. INSTALLATION

For installing of the module, use four mounting holes located at the corner of the bezel. The bezel is not intended to be used as a cosmetic purpose.The proper protective cover(lens) over the LCD surface and the proper enclosure is recommended to be attached in order to prevent polarizer surface from scratching or staining. The transparent opening dimensions of protective cover are recommended to be smaller than the viewing area specified in Section 4.

12. CAUTION AND HANDLING PRECAUTIONS

(1) HANDLING

(a) Refrain from strong mechanical shock and applying any force to the LCD module . It may cause misoperation or damage of LCD and FL backlight.

(b) Note that polarizers are so soft as being easily damaged.
Do not press or scratch these surfaces with any hard object, and do not put the heavy material on the polarizer.

(c) If LCD is broken and liquid crystal material flows out, ingestion, inhalation, or contact with skin should be avoided. If liquid crystal material contacts with skin, wash immediately with alcohol and rinse thoroughly with water.

(d) This polarizer laminated to the LCD and adhesives should be attacked by organic solvent. When LCD surface becomes dirty, wipe softly with absorbent cotton wet with petroleum benzine or normal-hexane.

(e) Refrain from discharge of high electro-static voltage.It will damage CMOS LSI in the module. So be sure that person handling module, tools like soldering iron, screw driver and working bench are grounded.

(f) Be careful not to be struck by electric shock of FL backlight.

(g) Do not handle it when power is applied because high voltage is applied to the module. (especially to CCFL lamp)

(h) Since FL cables are coated with silicone rubber, be careful not to damage the cable surface when handling LCD modules, or when attaching an LCD module to equipment.

(2) STORAGE

(a) Do not leave the module in high temperature, especially in high humidity for a long time. It is recommended to store the module where the temperature is in the range of 0℃ to 35℃ and the humidity is lower than 70%.

(b) Store the module without exposure to direct sunlight or fluorescent lamp.

(3) OPERATION

(a) Do not insert or remove LCD module from main system with power applied.

(b) Power supplies should always be turned on before the input signals are applied, and the input signals should be turn off before power supplies are turned off.

(c) Following power supply sequence is requested in order to keep better display quality and reliability.

Densitron Technologies PLC Copyright

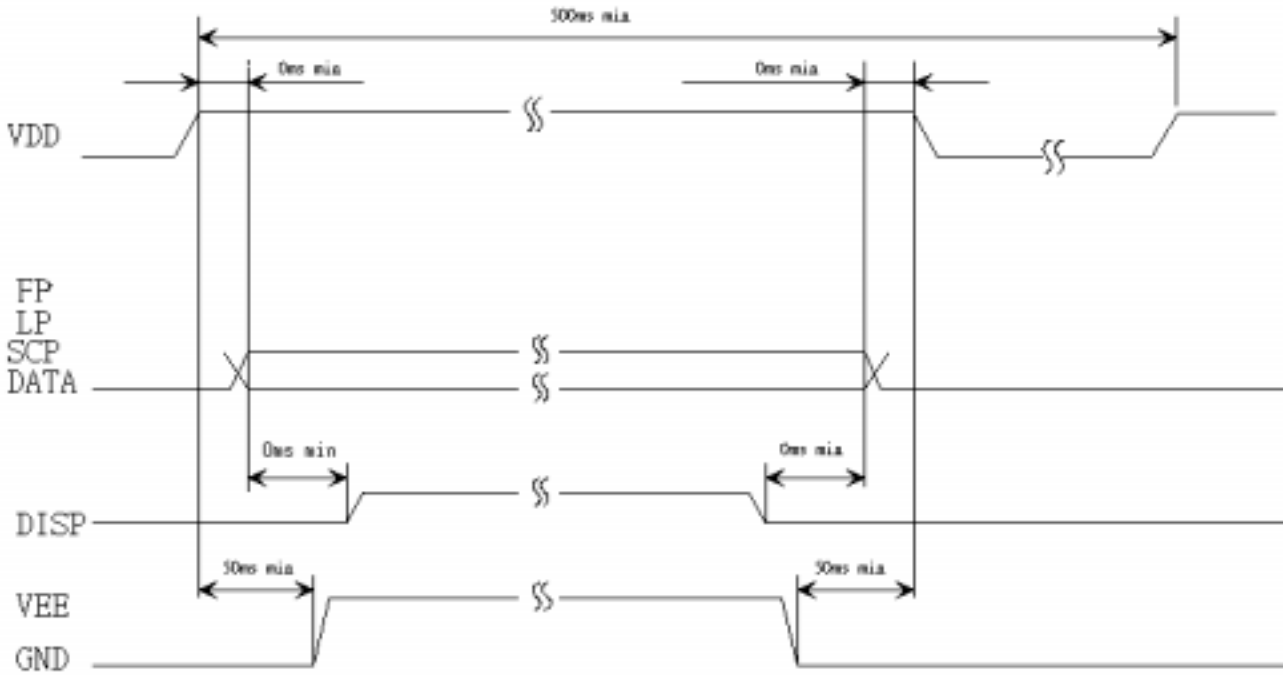

(4) OTHERS

(a)Ultra-violet ray cut filter is necessary for outdoor operation.

(b)Avoid condensation of water. It may cause misoperation or disconnection of electrode.

(C)Do not exceed the maximum rating values under the worst probable conditions taking into account the supply voltage variation, input voltage variation, variation in part constants, and environmental temperature, etc. otherwise LCD module may be damaged.

(d)Be sure that power supply output from the system should be limited as listed value show below. (for example Quick Arching Fuse with listed rating can be used)It is because this LCD module explained in the data sheet has a current limitter or a circuit with such function at power input line(s), but there may be some possibility of overheat and/or burning of LCD module and its peripheral devices before current limitter of the module when open-short test of the module is performed by using higher power supply than following recommended value.

Power supply	Recommended maximum output current of power supply	Built-in Fuse Ratings (for reference)
V_{DD}	4A	2A
V_{EE}	4A	1A

REVISION HISTORY

Date	Sheet	Item	Old	New	Reason

Densitron Technologies PLC Copyright