SPECIFICATION

For

EG2401S-ER

This specification consists of two documents as follows.

1.LCD Specification SC-010006210

2.LCD QA Standard M4-00100

Customer's Approval	
Date By	Date Feb. 4 '93 Presented by Y.Katayama GM QA dep. SEIKO EPSON CORP. LCD DIV. Quality assuranse Dep.

Spec Code	S C – 010006210

SPECIFICATIONS

EG2401S–

Item No	Item	Sheet Code
1	Basic Specification Outline Dimensions	1 1 – 010006210 1 2 – 25606401 1 3 – 14000000 SD–010129–D
2	Absolute Maximum Ratings	2 1 – C0000016
3	Electrical Characteristics	3 1 – 010006210 3 2 – B0000000 3 3 – B0000000 3 4 – 25606401 3 5 – 25606401
4	Optical Characteristics	4 1 – SJ648L06 4 2 – JE000000 4 3 – P0000000 4 4 – P0000000
5	Reliability	5 1 – S0000001 5 2 – S0000000
6	Package Specifications	6 1 – 010006210 6 2 – 010006210
7	Others	A 4 – S0000000-A
8	Handling Precautions	B – PEMN0000-A(1~4)
9	Revision Sheet	0 0 – 010006210

SEIKO EPSON CORPORATION
LCD DIVISION

LD DESIGN Dep.		
K. Ushikoshi	S. Kobayashi	M. Miyashita

1. Basic Specifications

1-1 Display Specifications

(1) STN Mode Positive Display type Transflective Model

(2) Display Color

Display Color : Display Data"1" : Dark Blue
Background Color : Display Data"0" : Gray

(3) Viewing Angle : 6 0'clock direction

(4) Driving Duty : 1/64 Duty

(5) Backlight : EL (Yellow Green)

*1) Color tone is slightly changed by temperature and driving voltage.

1-2 Mechanical Specifications

(1) Outline Dimensions : Refer to attached Outline Dimensions figure SD－010129－D

(2) Dot Matrix : 256 dots × 64 dots

(3) Dot Size : 0.48 (W) × 0.48 (H) (mm)

(4) Dot Pitch : 0.52 (W) × 0.52 (H) (mm)

(5) Weight : 210g (Typ.)

1-3 Block Diagram

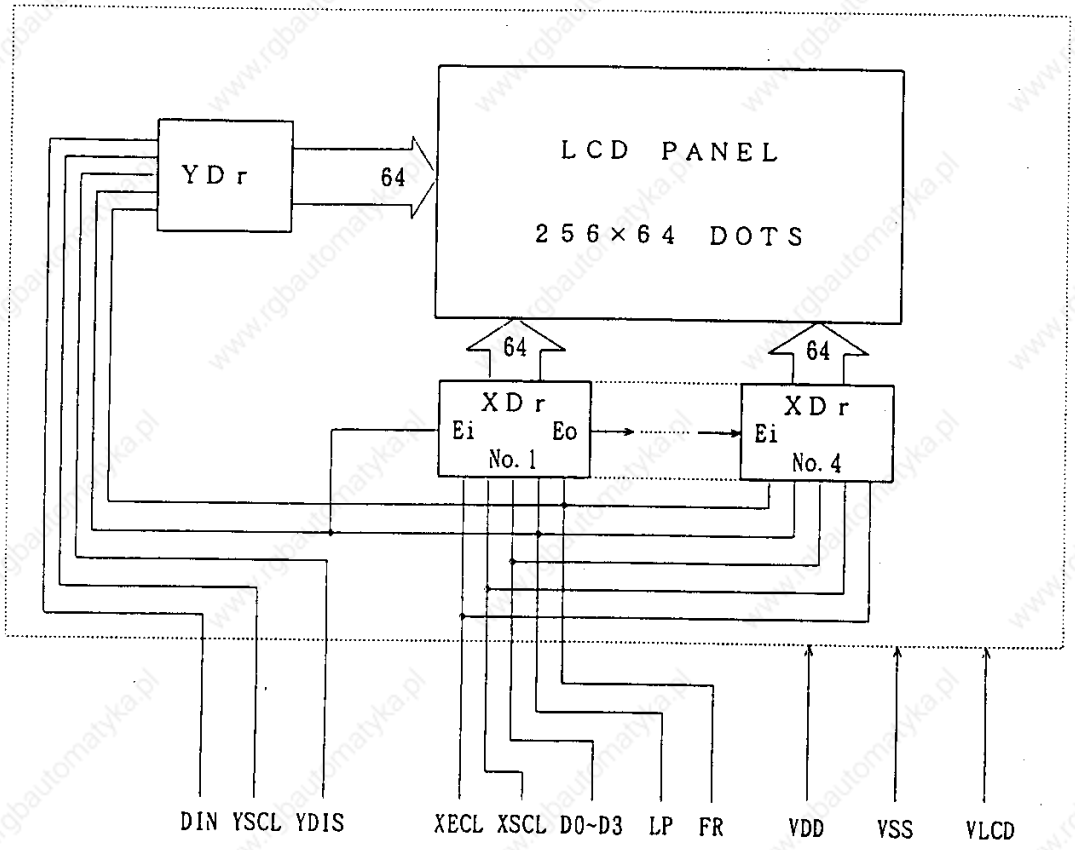

1-4 Terminal Functions

Pin No.	Symbol	Function
1	VDD	Power supply for logic
2	VSS	Ground
3	VLCD	Power supply for LCD
4	LP	Latch pulse signal input
5	FR	Switch signal input to convert LC drive waveform to AC
6	YDIS	Display control (Display off "0", Normal state "1")
7	YSCL	Row scan shift clock input
8	DIN	Row scan start-up pulse input
9	XSCL	Display data shift clock input
10	XECL	Enable transition clock input
11 ~ 14	D0 ~ D3	Display data pulse input

△ PIN NO.	SIGNAL
1	VDD
2	VSS
3	VLCD
4	LP
5	FR
6	YDIS
7	YSCL
8	DIN
9	XSCL
10	XECL
11	D0
12	D1
13	D2
14	D3

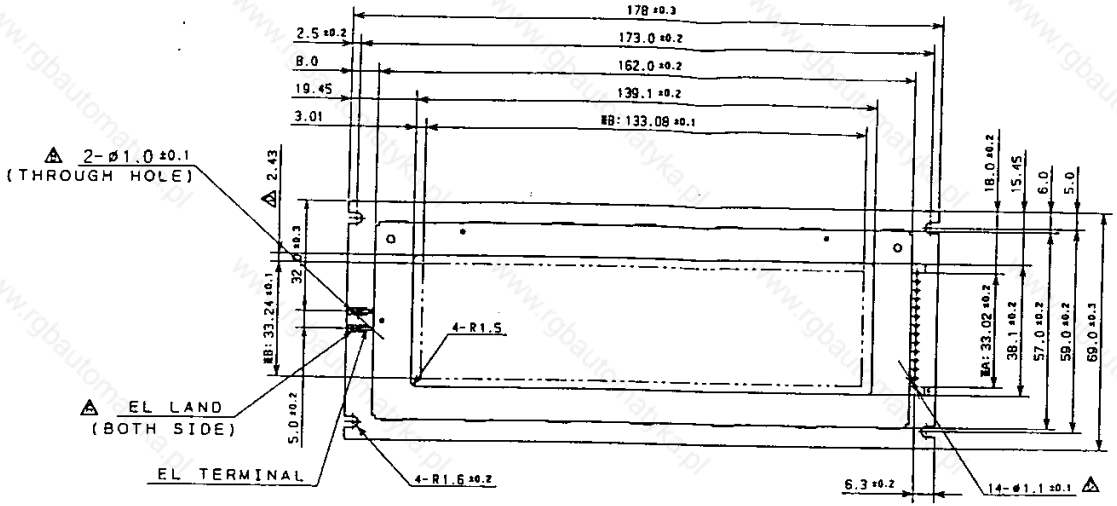

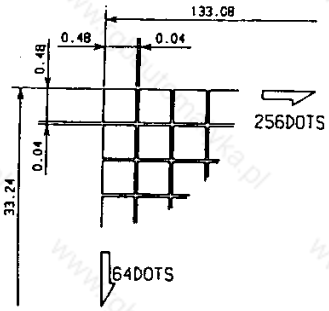

DOT DETAIL (20/1)

NOTES

1. OUT OF SCALE
2. *A: PITCH 2.54±0.2 X (14-1) = 33.02±0.2
3. *B: ACTIVE AREA OF LCD
△ 4. EL COLOR: BR-BLUE, ER-GREEN, FR-WHITE
5. EL LIGHTING AREA 136x36 MINIMUM

E	-	-	-
D	-	-	'00. 11. 25
C	-	-	'00. 7. 10
B	-	-	'00. 4. 26
A	-	-	'00. 4. 21

MODEL: EG2401*-BR, ER, FR

TITLE: OUTWARD DWG.

DWG NO: SD-010129-D

SCALE	UNIT	TOL.	DATE
1/1	mm	±0.5	NOV/ 5/'3

2. Absolute Maximum Ratings

Item	Symbol	Standard Value	Unit	Condition
Power supply Voltage	VDD－VSS	0 ～ ＋7．0	V	
LCD Driving Voltage	VDD－VLCD	0 ～ ＋25．0		
Input Voltage	VIN	VSS≦ VIN ≦VDD		
EL Voltage	VEL	150	Vrms	
EL Frequency	fEL	0．8	KHz	
Operating Temperature Range	TOP	0 ～ ＋50	℃	Not to be dewy
Storage Temperature Range	TST	－20 ～ ＋60		

*1) Relation between Store Conditions and Permissible Time for EL Backlight

Store Conditions	Permissible Time
60℃, 90%RH	60H
50℃, 90%RH	200H
40℃, 90%RH	450H
30℃, 90%RH	750H
20℃, 90%RH	1400H

3. Electrical Characteristics

3-1 DC Characteristics

(1) Module DC Characteristics

Ta = 0 ~ 50 °C, VDD = 5 V ± 5 %

Item	Symbol	Standard Value			Unit	Applicable Terminal	Condition
		MIN	TYP	MAX			
Power Supply Voltage	VDD	4.75	5.0	5.25	V	VDD	
	VDD-VLCD	Depending on Optical Characteristics				VLCD	
"0" Input Voltage	VIL	0	–	0.2VDD	V	LP, FR YDIS, YSCL DIN, XSCL XECL D0~D3	
"1" Input Voltage	VIH	0.8VDD	–	VDD			
I/O Leak Current	|IL|	–	–	50	μA		
Power Supply Current	IDD	–	–	4	mA	VDD	*1
LCD Power Supply Current	ILCD	–	–	3	mA	VLCD	

*1) VLCD=-8.6V, Frame Frequency 75Hz

(2) Backlight DC Characteristics

Ta = 20 °C

Item	Symbol	Standard Value			Unit	Applicable Terminal	Condition
		MIN	TYP	MAX			
EL Voltage	VEL	–	100	–	Vrms		
EL Frequency	fEL	–	400	–	Hz		
EL Current	IEL	–	8.2	10.6	mA		*2
INVERTER Input Current	IIN	–	43	49	mA		*3

*2) Operation at AC100Vrms, 400Hz
The life of half brightness is 1,500 Hours. (20°C, 60%RH)

*3) Operation with suitable INVERTER(NEL-D32-49)
The life of half brightness is 3,000 Hours. (20°C, 60%RH)

3-2 AC Characteristics

Item	Symbol	Standard Value			Unit	Condition
		MIN	TYP	MAX		
Allowable FR Delay Time	TFD	−500	0	500	nsec	VDD= 5V
LP, YSCL Period	TLC	−	220	−	μsec	
XSCL Period	TXSC	166	−	−	nsec	
YSCL "L" Time	TSL	180	−	−	nsec	
YSCL Pulse Width	WYSC	180	−	−	nsec	
LP "L" Time	TLL	220	−	−	nsec	
LP Pulse Widhte	WLP	250	−	−	nsec	
XECL "L" Time	TEL	100	−	−	nsec	
XECL Pulse Width	WECL	100	−	−	nsec	
XSCL "L" Time	TXSL	63	−	−	nsec	
XSCL Pulse Width	WXSC	63	−	−	nsec	
XECL Setup Time	TL1	140	−	−	nsec	
XECL Hold Time	TL2	50	−	−	nsec	
Latch Timing	TLT1	125	−	−	nsec	
	TLT2	0	−	−		
	TLS1	100	−	−		
	TLS2	0	−	−		
XECL Switching Time ("H")	TS1	70	−	−	nsec	
XECL Switching Time ("L")	TS2	−10	−	−	nsec	
Data Setup Time	TDS	50	−	−	nsec	
Data Hold Time	TDH	30	−	−	nsec	
DIN Setup Time	TDIS	100	−	−	nsec	
DIN Hold Time	TDIH	30	−	−	nsec	
Input Wave Form Rise Time	tr	−	−	※1	nsec	
Input Wave Form Fall Time	tf	−	−	※1	nsec	

*1) (TXSC-TXSL-WXSC)/2 with 50nsec max.

3-3 Timing Chart 1

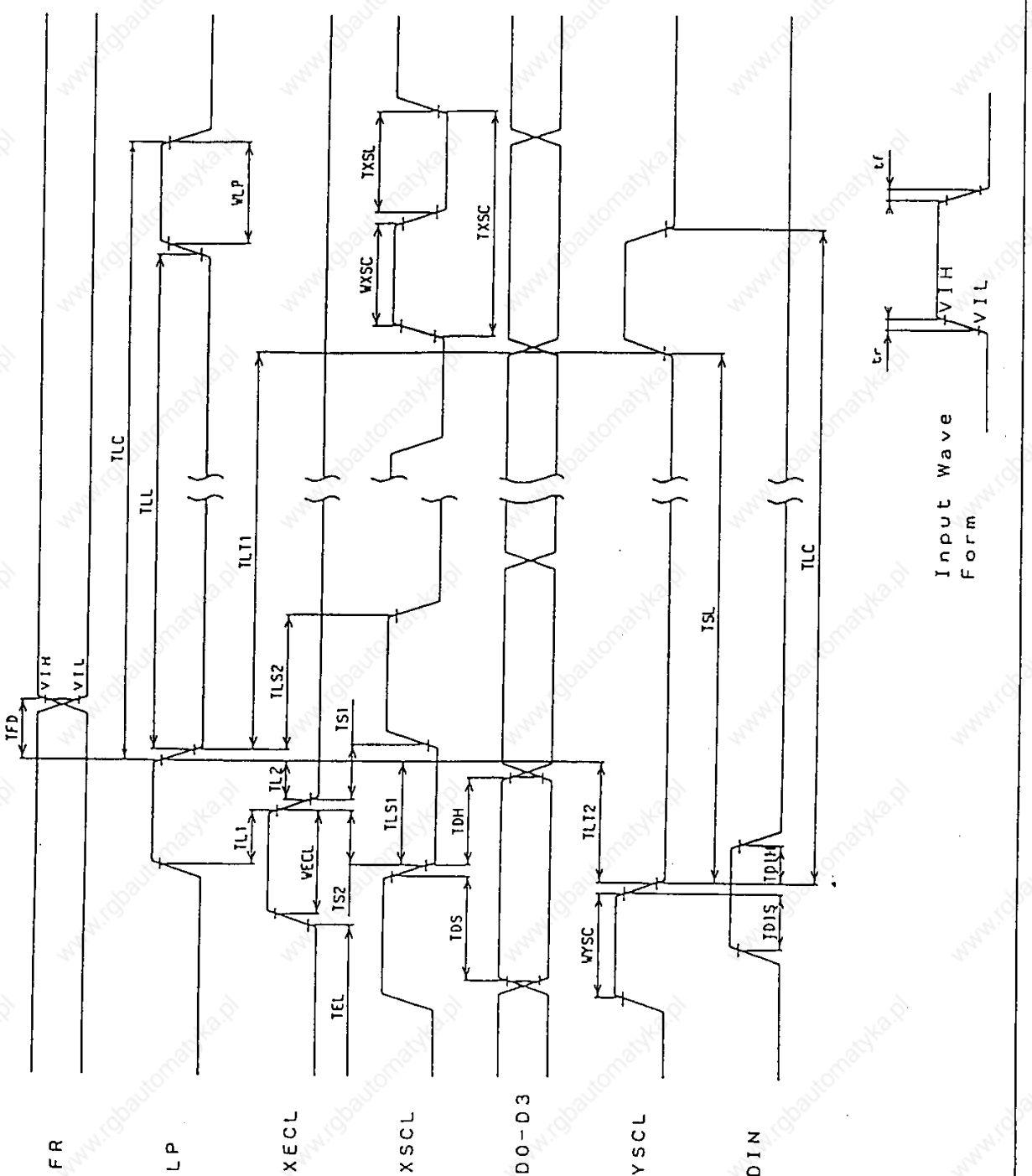

3-4 Timing Chart 2

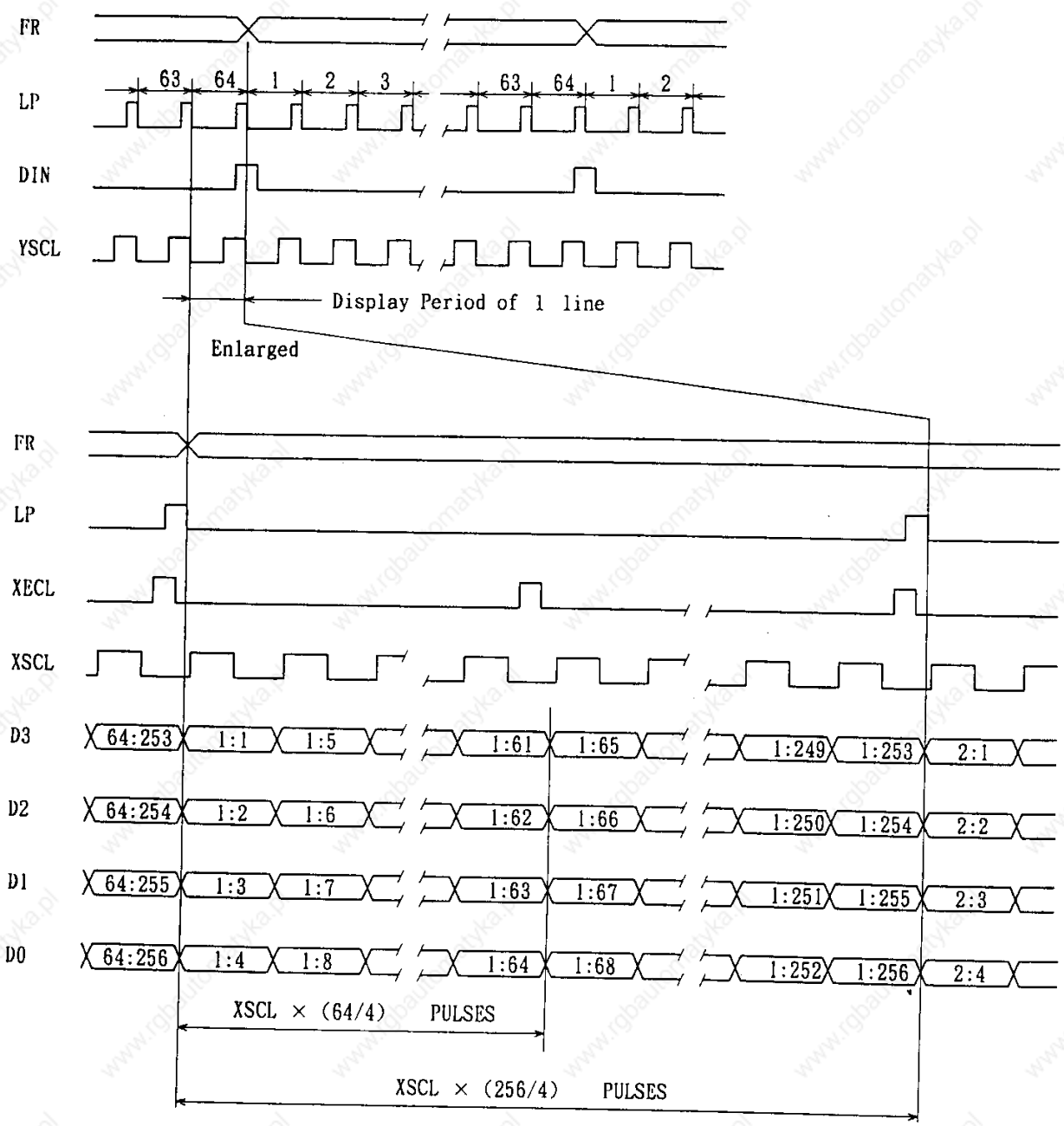

3-5 Relation between Data and Display

1: 1	1: 2	1: 3	1: 4		1:253	1:254	1:255	1:256
2: 1	2: 2	2: 3	·		·	2:254	2:255	2:256
3: 1	3: 2	·	·		·	·	3:255	3:256
4: 1	·	·	·		·	·	·	4:256
61: 1	·	·	·		·	·	·	61:256
62: 1	62: 2	·	·		·	·	62:255	62:256
63: 1	63: 2	63: 3	·		·	63:254	63:255	63:256
64: 1	64: 2	64: 3	64: 4		64:253	64:254	64:255	64:256

4. Optical Characteristics

4-1 Optical Characteristics

fFR = 75Hz

Item	Symbol	Temp ℃	Standard Value MIN	TYP	MAX	Unit	Condition
Driving Voltage	VOP *1	0	–	14.6	15.6	V	
		25	–	13.6	–		
		50	11.3	12.3	–		
Response Time	Tr	0	–	300	600	ms	
		25	–	100	200		
	Tf	0	–	500	1000		
		25	–	150	300		
Recommended Viewing Area	θY1	25	20	–	–	Deg	K ≧ 2
	θY2		30	–	–		
	θX1		25	–	–		
	θX2		25	–	–		
Contrast Ratio	K	25	–	3	–		
Brightness *2	B	20	52	65	–	cd/m²	*3
			39	55	–		*4

*1) Vop=LCD Driving Voltage getting maximum contrast
=VDD-VLCD

*2) Initial values on the surface of the EL Backlight in a Darkroom

*3) Operation at AC100Vrms, 400Hz

*4) Operation with suitable INVERTER(NEL-D32-49)

4-2 Definition of Optical Characterisitics

(1) Optical Measuring Equipment

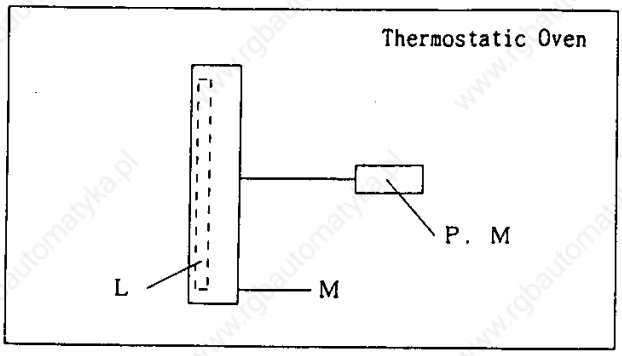

L : Built-in Backlight
P. M : Lighting Sensor
M : Module

[Specification of Equipments and Measuring Condition]
Luxmeter : Canon LC-3S
Brightness Measurement Spot Diameter ϕ2mm

Lighting Source : Built-in Backlight (EL)

(2) Definition of Viewing Angle

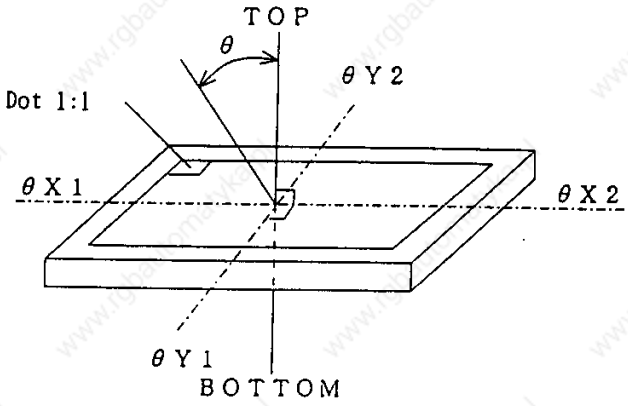

(3) Definition of Response Time

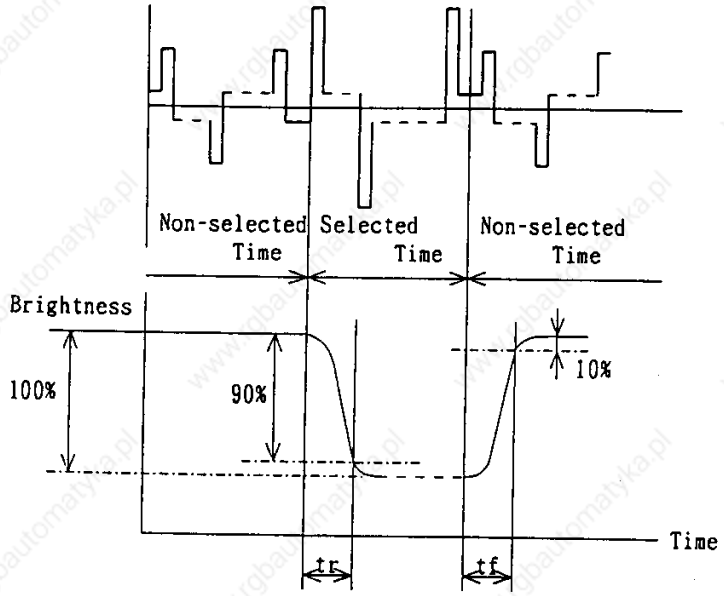

[Measuring Condition]
- VOP = TYP. value at Operating Temperature
- θX = θY = 0°

(4) Definition of Contrast Ratio

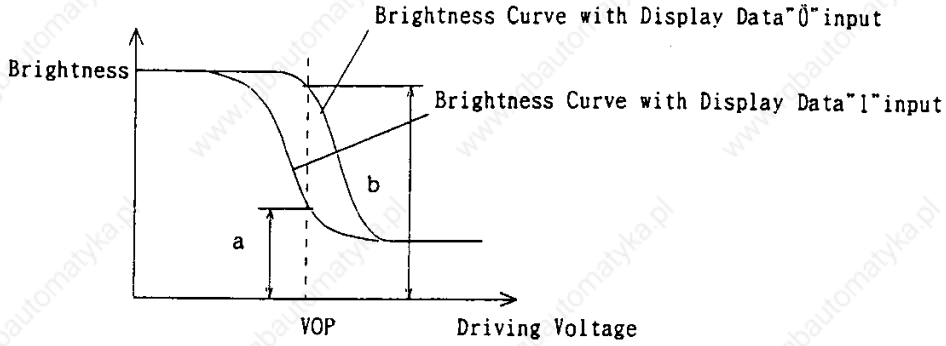

$$\text{Contrast Ratio} = \frac{\text{Brightness Curve with Display Data"0"input} \quad b}{\text{Brightness Curve with Display Data"1"input} \quad a}$$

[Measuring Condition]

- VOP = TYP. value at Operating Temperature
- $\theta X = \theta Y = 0°$

5. Reliability

5-1 Content of Reliability Test

No	Test Item	Conntent of Test	Test Condition	Applicable standard
		Environmental Test		
1	High temperature storage	Endurance test applying the high storage temperature for a long time.	60 ℃ 200 H	———
2	Low temperature storage	Endurance test applying the low storage temperature for a long time.	-20 ℃ 200 H	———
3	High temperature Operation	Endurance test applying the electric stress (Voltage & Current) and the thermal stress to the element for a long time.	50 ℃ 200 H	———
4	Low temperature operation	Endurance test applying the electric stress under low temperature for a long time.	0 ℃ 200 H	———
5	High temperature/ humidity storage	Endurance test applying the high temperature and high humidity storage for a long time.	60 ℃ 90 %RH 96 H	MIL-202E-103B JIS-C5023
6	High temperature/ humidity operation	Endurance test applying the electric stress (Voltage & Current) and temperature/humidity stress to the element for a long time.	50 ℃ 90 %RH 96 H	MIL-202E-103B JIS-C5023
7	Temperature cycle	Endurance test applying the low and high temperature cycle. -20℃ ⇔ 25℃ ⇔ 60℃ ⇔ 25℃ 30min. 5min. 30min. 5min. ⟷ 1 cycle	-20℃/60℃ 10 cycle	———
		Mechanical Test		
8	Vibration test	Endurance test applying the vibration during transportation and using.	10~22Hz→1.5mmp-p 22~500Hz →1.5G Total 0.5H	MIL-202E-201A JIS-C5025 JIS-C7022-A-10
9	Shock test	Constructional and mechanical endurance test applying the shock during transportation.	50G Half sign wave 11msec 3 times of each direction	MIL-202E-213B
10	Atmospheric pressure test	Endurance test applying the atmospheric pressure during transportation by air.	115 mbar 40 H	MIL-202E-105C
		Others		
11	Static electricity test	Endurance test applying the electric stress to the terminal.	VS = 800 v RS = 1.5 kΩ CS = 100 PF 1 time	MIL-883B-3015.1

*1) Driving condition for operation test
Power supply voltage for Logic system = 5V
Power supply voltage for LCD system = Getting Optimum Contrast at 25℃

5-2 Failure Judgement Criterion

Criterrion Item	Test Item No.											Failure Judgment Criterion
	1	2	3	4	5	6	7	8	9	10	11	
Basic Specification	○	○	○	○	○	○	○	○	○	○	○	Out of the Basic Specification
Electrical characteristic	○		○	○	○	○					○	Out of the DC and AC Characteristic
Mechanical characteristic						○	○	○	○			Out of the Mechanical Specification Color change : Out of Limit Apperance Specification
Optical characteristic	○	○	○	○	○	○	○			○	○	Out of the Apperance Standard

6. Package Specifications

6-1 Inner Carton Box

Each LCD module is wrapped with a antistatic pouch, and put into the inner carton box for containing 10 pcs of LCD module.
The following contents should be indicated on the inner carton box.

Type	EG2401S-ER
Q'ty	10pcs.
Lot	Lot No.
EPSON	SEIKO EPSON CORP.
	DISPLAY DIVISION

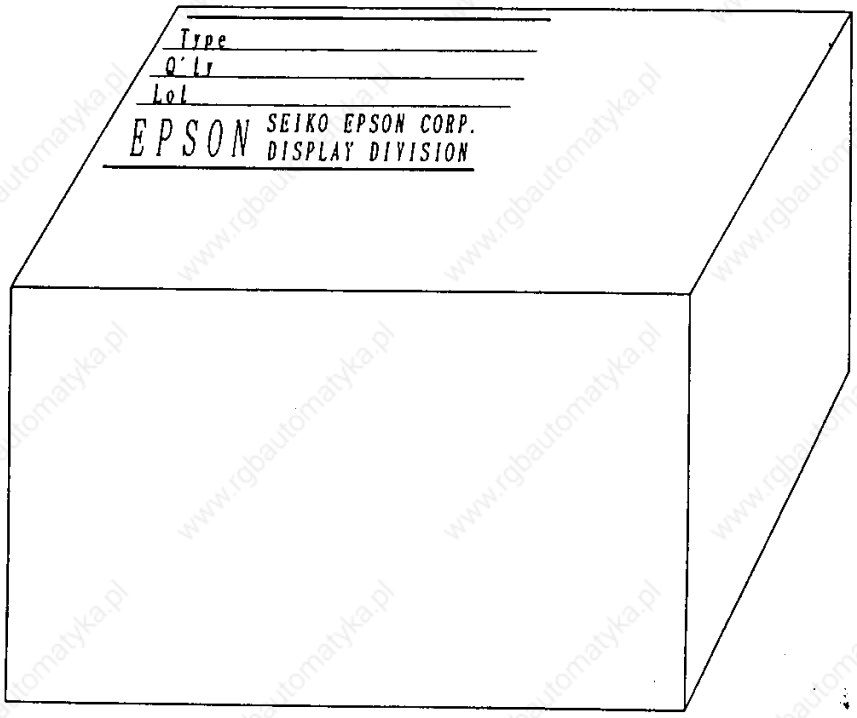

Fig. 1 Outline of Inner Carton Box

6-2 Master Carton Box

The master carton box is for sending to each user.
The master carton box contains 4 pcs of inner carton box.
The indications are applied to four faces A, B, C and D of the master carton as shown Fig. 1 below.

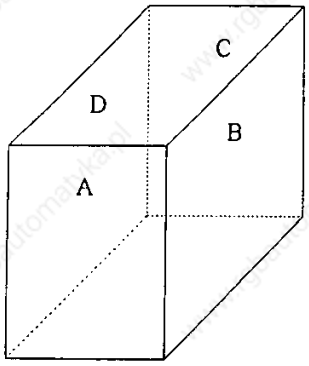

Fig. 1 Outline of Master Carton Box

Face A

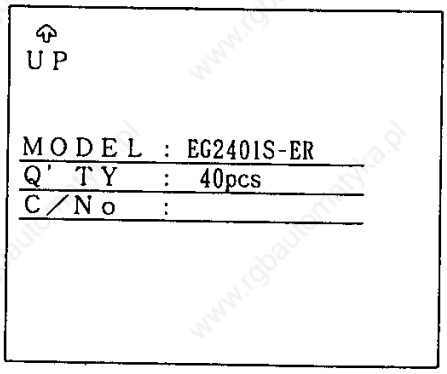

Face B

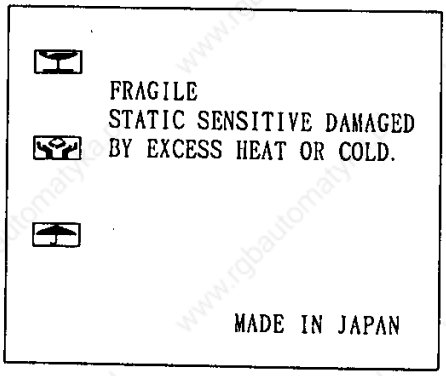

Face C

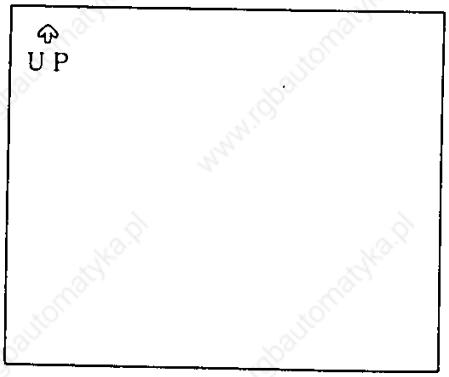

Face D

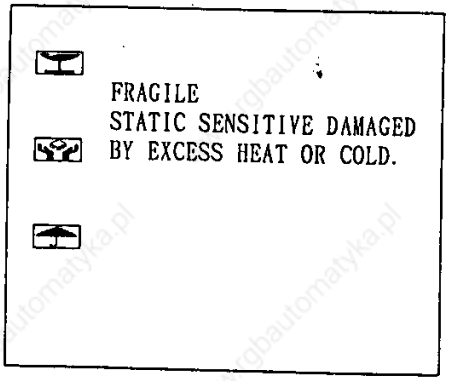

Fig. 2 Contents of Indication for Master Carton Box

7 Luminous Area of EL

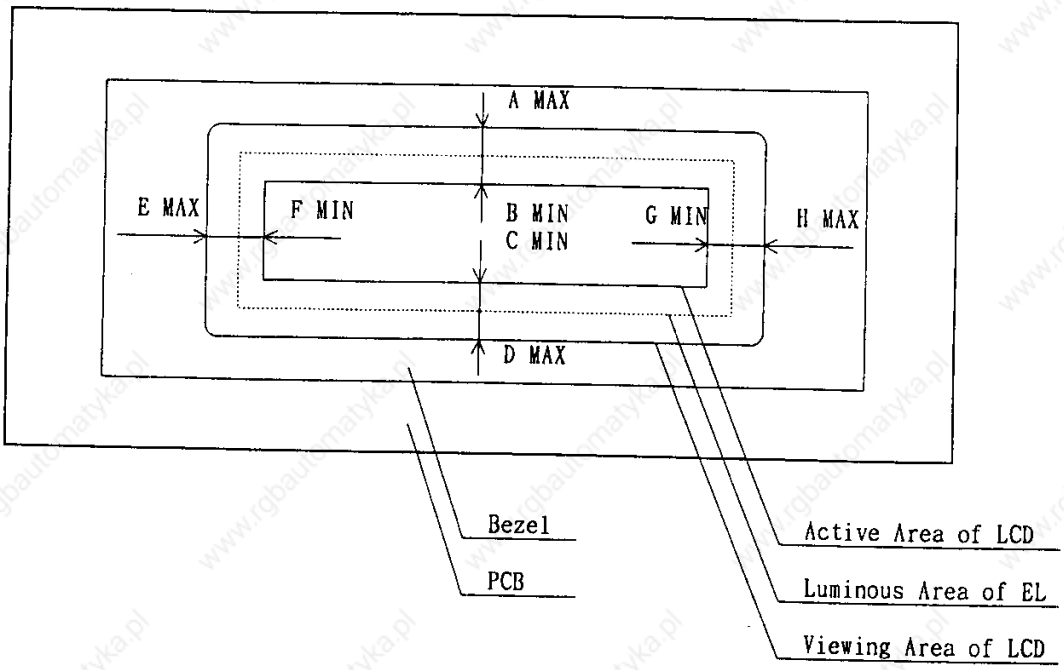

(mm)

A	B	C	D	E	F	G	H
3.0	0.6	0.4	2.0	1.7	1.8	–	0

Precautions for use of LCD Modules

<Handling Precautions>

- The display panel is made of glass. Do not subject it to a mechanical shock by dropping it from a high place, etc.
- If the display panel is damaged and the liquid crystal substance inside it leaks out, be sure not to get any in your mouth. If the substance comes into contact with your skin or clothes, promptly wash it off using soap and water.
- Do not apply excessive force to the display surface or the adjoining areas since this may cause the color tone to vary.
- The polarizer covering the display surface of the LCD module is soft and easily scratched. Handle this polarizer carefully.
- If the display surface becomes contaminated, breathe on the surface and gently wipe it with a soft dry cloth. If it is heavily contaminated, moisten cloth with one of the following solvents.

  - Isopropyl alcohol
  - Ethyl alcohol

  Solvents other than those mentioned above may damage the polarizer. Especially, do not use the following.

  - Water
  - Ketone
  - Aromatic solvents

- Exercise care to minimize corrosion of the electrode. Corrosion of the electrodes is accelarated by water droplets, moisture condensation or a current flow in a high-humidity environment.
- Install the LCD Module by using the mounting holes. When mounting the LCD Module make sure that it is free of twisting, warping, and distortion. In particular, do not forcibly pull or bend the I/O cable or the backlight cable.
- Do not attempt to disassemble or process the LCD Module.
- NC terminal should be open. Do not connect anything.
- If the logic circuit power is off, do not apply the input signals.

- To prevent destruction of the elements by static electricity, be careful to maintain an optimum work environment.
    - Be sure to ground the body when handling the LCD Modules.
    - Tools required for assembly, such as soldering irons, must be properly grounded.
    - To reduce the amount of static electricity generated, do not conduct assembly and other work under dry conditions.
    - The LCD Module is coated with a film to protect the display surface. Exercise care when peeling off this protective film since static electricity may be generated.

<Storage Precautions>

- When storing the LCD Modules, avoid exposure to direct sunlight or to the light of fluorescent lamps. Keep the modules in bags designed to prevent static electricity charging under low temperature/normal humidity conditions (avoid high temperature, high humidity and low temperatures below 0 °C). Whenever possible, the LCD Modules should be stored in the same conditions in which they were shipped from our comany.

<Design Precaustions>

- The absolute maximum ratings represents the rated value beyond which LCD Modules cannot exceed. When the LCD Modules are used in excess of this rated value, their operating characteristics may be adversely affected.
- To prevent the occurrence of erroneous operation caused by noise, attention must be paied to satisfy VIL, VIH, and the other specification values, including taking the precaution of using signal cables that are short.
- The liquid crystal display exhibits temperature dependency characteristics. Since recognition of the display becomes difficult when the LCD is used outside its designated operating temperature range, be sure to use the LCD within this range. Also, keep in mind that the voltage levels necessary for clear displays (VLCD or VDDH) will vary according to temperature.
- If DC is impressed on the liquid crystal display panel, display definition is rapidly deteriorated by the electrochemical reaction that occurs inside the liquid crystal panel. To eliminate the opportunity of DC impressing, be sure to maintain the AC characteristics of the input signals sent to the LCD Module (especially, LP, DIN, and FR).

• When turning the power supply ON/OFF, strictly follow the sequence shown in Fig. 1 so that latch-up and DC driving of the LCD Module can be prevented.

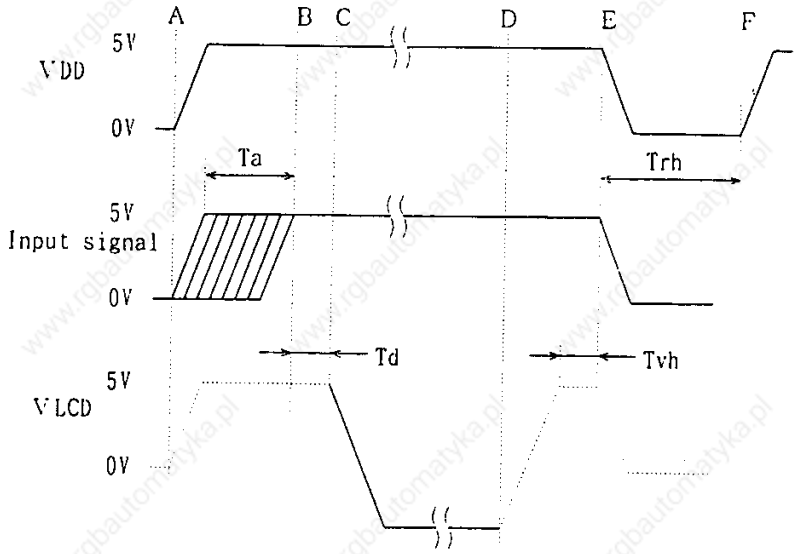

A : +5V power supply ON
B : ALL signals confirmed (normal operation signal)
C : Negative power supply ON
D : Negative power supply OFF
E : +5V power supply OFF
F : +5V power supply reclosing
Ta : Signal unconfirmed time
Td : Delay time of liquid crystal power supply (Min. 0ms)
Tvh : VDD hold time (Min. 0ms)
Trh : Power supply reclosing wait time (Min. 50ms)

Fig. 1 Power supply ON/OFFsequence

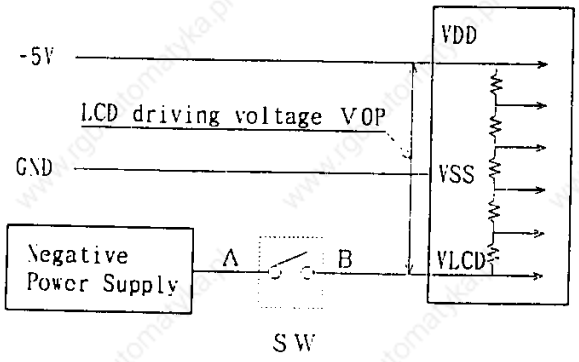

Fig. 2 Example of power supply connection

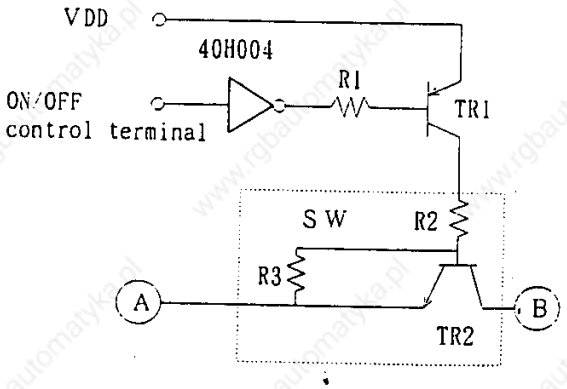

Fig. 3 Example of SW section circuit

• Fig. 1 shows the voltage levels at the module terminal section when the module is connected to a power supply and signal lines.

• Regarding VLCD in Fig. 1, the dashed line shows the OFF status of SW in Fig. 2, while the solid line indicates the ON status.

• Prepare the negative power supply shown in Fig. 2 with a capacity that is at least sufficient to handle the current of the liquid crystal power supply in DC characteristics.

• Fig. 3 provides an example of the circuit for SW section in Fig. 2.

<Others>

- Liquid crystals solidify under low temperatures (below the storage temperature range) leading to defective orientation or the generation of air bubbles (balck or white). Air bubbles may also be generated if the module is subjected to a strong shock at a low temperature.

- If the LCD Modules have been operating for a long time showing the same display patterns, the display patterns may remain on the screen as ghost images and a slight contrast irregularity may also appear. A normal operating status can be regained by suspending use for some time.
  It should be noted that this phenominon does not advesely affect performance reliability.

- To minimize the performance degradation of the LCD Modules resulting from destruction caused by static electricity, etc., exercise care to avoid holding the following sections when handling the modules.

  - Exposed area of the printed circuit board

  - Terminal electrode sections

Revision Record

REV.	Revision Items	Date
		1993. 1.28
A		
B		
C		
D		
E		
F		
G		
H		
I		
J		
K		
L		
M		
N		
P		
Q		
R		
S		
T		
U		
V		
W		
X		