PREPARED BY : DATE	SHARP	SPEC No. LD-9301
		FILE No.
		ISSUE : Mar. 7, 1997
		PAGE : 16 pages
APPROVED BY : DATE	TENRI LIQUID CRYSTAL DISPLAY GROUP SPECIFICATION	APPLICABLE GROUP Tenri Liquid Crystal Display Group

DEVICE SPECIFICATION FOR

TFT-LCD Module

MODEL No.

LQ10PS2G

☐ CUSTOMER'S APROVAL

DATE _____

BY _____

PRESENTED BY H. Fukuoka

H. FUKUOKA
Department General Manager
Engineering Department 2
TFT LCD Development Center
TENRI LIQUID CRYSTAL DISPLAY GROUP
SHARP CORPORATION

RECORDS OF REVISION

LQ10PS2G

SPEC No.	DATE	REVISED No.	PAGE	SUMMARY	NOTE
LD-9301	1997. 3. 7	-	-	-	1 st Issue

1. Application

This specification applies to color TFT-LCD module, LQ10PS2G.

©The device listed in these specification sheets was designed and manufactured for use in OA equipment.

© In case of using the device for applications such as control and safety equipment for transportation(aircraft, train, automobiles, etc.), rescue and security equipment and various safety related equipment which require higher reliability and safety, take into consideration that appropriate measures such as fail-safe functions and redundant system design should be taken.

©Do not use the device for equipment that requires an extreme level of reliability, such as aerospace applications, telecommunication equipment(trunk lines), nuclear power control equipment and medical or other equipment for life support.

©SHARP assumes no responsibility for any damage resulting from the use of the device which does not comply with the instructions and the precautions specified in these specification sheets.

Contact and consult with a SHARP sales representative for any questions about this device.

2. Overview

This module is a color active matrix LCD module incorporating amorphous silicon TFT (Thin Film Transistor). It is composed of a color TFT-LCD panel, driver ICs, control circuit and power supply circuit. Graphics and texts can be displayed on a 800×3×600 dots panel with 262,144 colors by supplying 18 bit data signals (6bit/color), four timing signals, +5V DC supply voltage for TFT-LCD panel driving.

The backlight system is not installed in this module and the TFT-LCD panel used for this model is a high-transmission and higher-color-saturation type. Therefore, this module is suitable for the projection-type multimedia applications.

Horizontal display reversal function is built in this module for the projection use.

[Features]

◎ Low power consumption.

◎ Light weight.

◎ High transmissivity

◎ Wide color reproduction range

◎ Mechanical compatibility with the VGA models : LQ10P341.

3. Mechanical Specifications

Parameter	Specifications	Unit
Display size	26 (10.4") Diagonal	cm
Active area	211.2(H) × 158.4 (V)	mm
Pixel format	800 (H) × 600 (V)	pixel
	(1 pixel=R+G+B dots)	
Pixel pitch	0.264(H) × 0.264 (V)	mm
Pixel configuration	R,G,B vertical stripe	
Display mode	Normally white	
Unit outline dimensions	265.0(W)×195.0(H)×8.0(D)	mm
Mass	420±20	g
Surface treatment	Hard-coating 2H (clear)	

Outline dimensions is shown in Fig.1

4. Input Terminals

4-1. TFT-LCD panel driving

CN1 Used connector:DF9BA-41P-1V(59) (Hirose Electric Co., Ltd.)

Corresponding connector:DF9 -41S-1V(59) (〃)

DF9A-41S-1V(59) (〃)

DF9B-41S-1R(59) (〃)

CN1 pin arrangement from module

(Transparent view)

※Please use the gold-plated pins for both connectors.

Pin No.	Symbol	Function	Remark
1	GND		
2	CK	Clock signal for sampling each data signal	
3	GND		
4	GND		
5	[illegible]	Horizontal synchronous signal	[Note1]
[illegible]	[illegible]	[illegible] synchronous signal	[Note1]
7	GND		
8	R0	RED data signal (LSB)	
9	R1	RED data signal	
10	R2	RED data signal	
11	R3	RED data signal	
12	R4	RED data signal	
13	R5	RED data signal (MSB)	
14	GND		
15	GND		
16	GND		
17	G[illegible]	GREEN data signal (LSB)	
18	G1	GREEN data signal	
19	G2	GREEN data signal	
20	G3	GREEN data signal	
21	G4	GREEN data signal	
22	G5	GREEN data signal (MSB)	
23	GND		
24	GND		
25	GND		
26	B0	BLUE data signal (LSB)	
27	B1	BLUE data signal	
28	B2	BLUE data signal	
29	B3	BLUE data signal	
30	B4	BLUE data signal	
31	B5	BLUE data signal (MSB)	
32	GND		
33	GND		
34	GND		
35	ENAB	Signal to settle the horizontal display position	[Note2]
36	Vcc	+5.0V power supply	
37	Vcc	+5.0V power supply	
38	R/L	Signal to settle the horizontal display reverse	[Note3]
39	TST	This should be electrically opened during operation	
40	GND		
41	GND		

※The shielding case is connected with GND

【Note1】 The polarity of both synchronous signals are negative.

【Note2】 The horizontal display start timing is settled in accordance with a rising timing of ENAB signal. In case ENAB is fixed "Low", the horizontal start timing is determined as described in 7-2. Don't keep ENAB"High" during operation.

【Note 3】

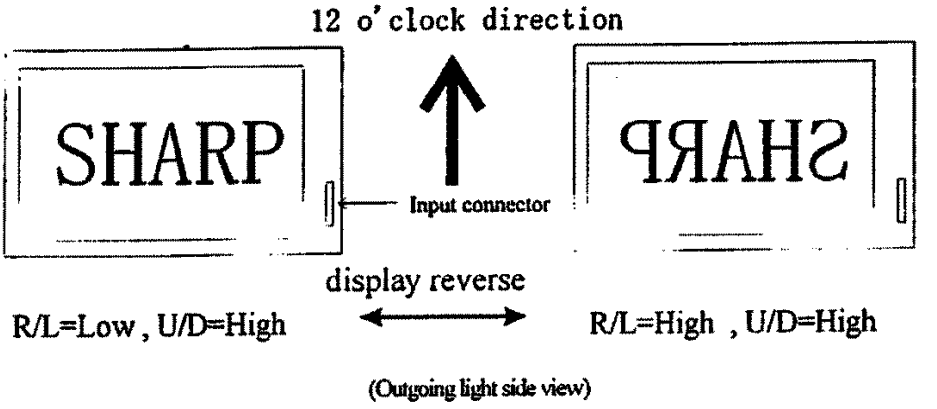

(Outgoing light side view)

5. Absolute Maximum Ratings

Parameter	Symbol	Condition	Ratings	Unit	Remark
Input voltage	V_I	Ta=25℃	−0.3 ～ Vcc+0.3	V	【Note1】
+5V supply voltage	Vcc	Ta=25℃	0 ～ + 6.0	V	
Storage temperature	Tstg	—	−25 ～ +60	℃	【Note2】
Operating temperature (Ambient)	Topa	—	0 ～ +50	℃	
Wave length of light source	λ1	—	≧ 400	nm	
Illumination intensity of light source	Ii	—	≦ 300,000	lx	【Note3】

【Note1】 CK,R0～R5,G0～G5,B0～B5,Hsync,Vsync,ENAB,R/L

【Note2】 The temperature at any points of the module, especially on the TFT-LCD panel, should not exceed this specification value.

Humidity : 95%RH Max. at Ta≦40℃.

Maximum wet-bulb temperature at 39℃ or less at Ta>40℃.

No condensation.

【Note3】 The intensity at any points on the panel should not exceed this specification value.The light source should be placed at the incident-light side.

Measurement point : panel surface

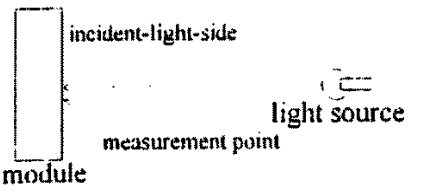

6. Electrical Characteristics

Ta=25 C

Parameter		Symbol	Min.	Typ.	Max.	Unit	Remark
+5V	Supply voltage	Vcc	+4.5	+5.0	+5.5	V	[Note1]
	Current dissipation	Icc	–	270	425	mA	[Note2]
Permissive input ripple voltage		V_{RP}	–	–	100	mVp-p	Vcc=+5.0V
Input voltage (Low)		V_{IL}	–	–	0.3Vcc	V	
Input voltage (High)		V_{IH}	0.7Vcc	–	–	V	[Note3]
Input [illegible] (low)		I_{OL1}	–	–	[illegible]	μA	V_I=0V [Note4]
		I_{OL2}	–	–	60.0	μA	V_I=0V [Note5]
Input current (High)		[illegible]	–	–	1.0	[illegible]	V_I=Vcc [illegible]
		[illegible]	–	–	60.0	μA	V_I=Vcc [Note7]

[Note1]

Vcc-turn-on conditions

0<t1≦10ms

0<t2≦50ms

0 [illegible]

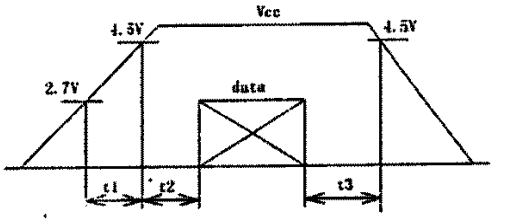

Vcc-dip conditions

1) 2.7V≦Vcc<4.5V
td≦10ms

2) Vcc<2.7V
Vcc-dip conditions should also follow the Vcc-turn-on conditions

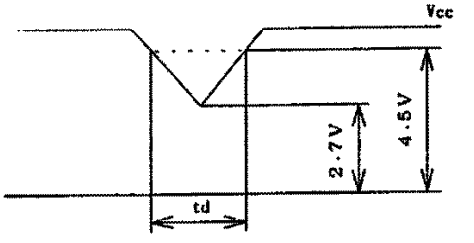

[Note2] The typical value of Icc is measured in the following condition.

Vcc=+5.0V

16-gray-bar pattern.

All of the timing parameters are typical value.

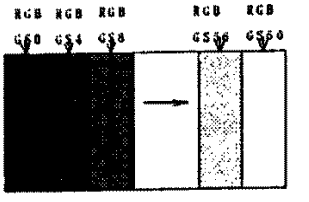

[Note3] CK,R0~R5,G0~G5,B0~B5,Hsync,Vsync,ENAB,R/L

[Note4] CK,R0~R5,G0~G5,B0~B5,Hsync,Vsync,ENAB

[Note5] R/L

[Note6] CK,R0~R5,G0~G5,B0~B5,Hsync,Vsync,R/L

[Note7] ENAB

7. Timing Characteristics of input signals

Timing diagrams of input signal are shown in Fig.2.

7-1. Timing characteristics

Parameter		Symbol	Min.	Typ.	Max.	Unit	Remark
Clock	Frequency	1/Tc	—	40.0	42.0	MHz	
	High time	Tch	6	—	—	ns	
	Low time	Tcl	6	—	—	ns	
	[illegible]	TH/T	40		60	%	
Data	[illegible]	[illegible]	5			ns	
	Hold time	Tdh	10	—	—	ns	
Horizontal sync. signal	Cycle	TH	20.8	26.4	—	μs	
			832	1056	—	clock	
	Pul[illegible]		2	128	200		
Vertical sync. signal	Cycle	[illegible]	628	666	798	[illegible]	
	Pulse width	TVp	2	4	6	line	
Horizontal display period		THd	800	800	800	clock	
Hsync-Clock phase difference		THc	10	—	Tc-10	ns	
Vertical data start position		TVs	23	23	23	line	
Hsync-Vsync phase difference		TVh	0	—	TH-THp	clock	

Note) In case of lower frequency, the deterioration of display quality, flicker etc.,may be occurred.

7-2. Horizontal display position and data enable signal

The horizontal display position is determined by ENAB signal and the input data corresponding to the rising edge of ENAB signal is displayed at the left end of the active area.

Parameter		Symbol	Min.	Typ.	Max.	Unit	Remark
Enable signal	Setup time	Tes	5	—	Tc-10	ns	
	Pulse width	Tep	2	800	Th-10	clock	
Hsync-Enable signal phase difference		THe	58	88	170	clock	

Note) When ENAB is fixed "Low", the display starts from the data of C88(clock) as shown in Fig.2. Be careful that the module does not work when ENAB is fixed "High".

7-3. Vertical display position

The vertical display position, Tvs, is fixed "23" (line).

7-4. Input Data Signals and Display Position on the screen

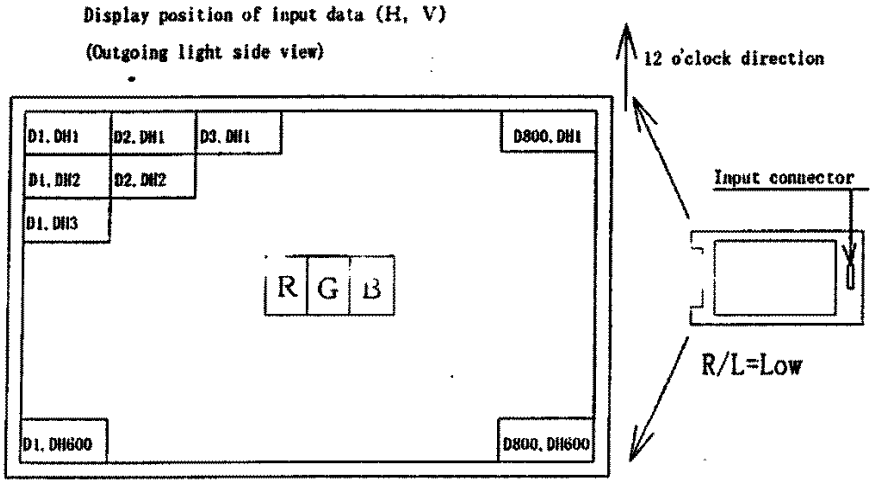

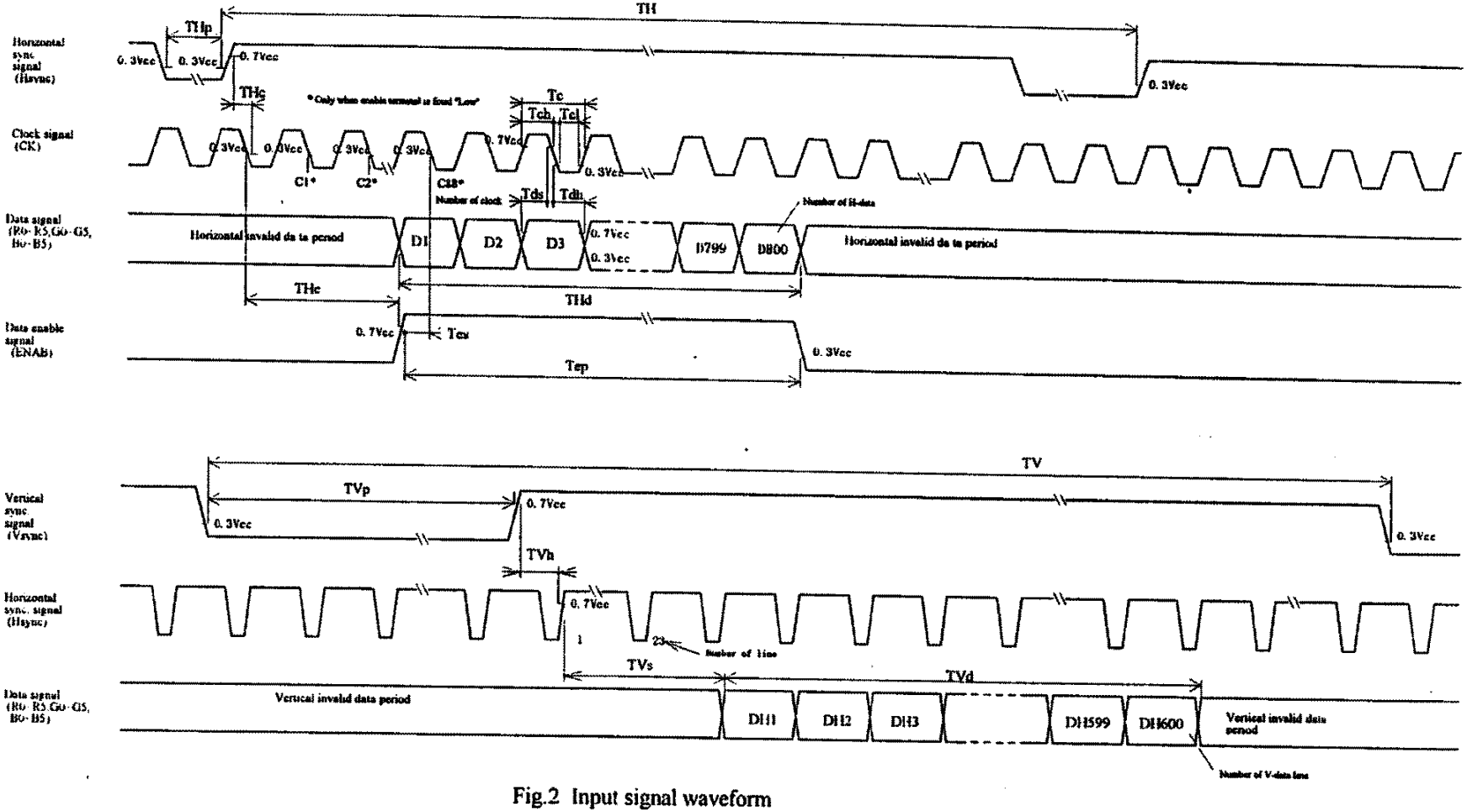

Fig.2 Input signal waveform

LB9301-8

8. Input Signals, Basic Display Colors and Gray Scale of Each Color

	Colors & Gray scale	Data signal																		
		GrayScale	R0	R1	R2	R3	R4	R5	G0	G1	G2	G3	G4	G5	B0	B1	B2	B3	B4	B5
Basic Color	Black	—	0	0	0	0	0	0	0	0	0	0	0	0	0	0	0	0	0	0
	Blue	—	0	0	0	0	0	0	0	0	0	0	0	0	1	1	1	1	1	1
	Green	—	0	0	0	0	0	0	1	1	1	1	1	1	0	0	0	0	0	0
	Cyan	—	0	0	0	0	0	0	1	1	1	1	1	1	1	1	1	1	1	1
	Red	—	1	1	1	1	1	1	0	0	0	0	0	0	0	0	0	0	0	0
	Magenta	—	1	1	1	1	1	1	0	0	0	0	0	0	1	1	1	1	1	1
	Yellow	—	1	1	1	1	1	1	1	1	1	1	1	1	0	0	0	0	0	0
	White	—	1	1	1	1	1	1	1	1	1	1	1	1	1	1	1	1	1	1
Gray Scale of Red	Black	GS0	0	0	0	0	0	0	0	0	0	0	0	0	0	0	0	0	0	0
	⇧	GS1	1	0	0	0	0	0	0	0	0	0	0	0	0	0	0	0	0	0
	Darker	GS2	0	1	0	0	0	0	0	0	0	0	0	0	0	0	0	0	0	0
	⇧	↓			↓						↓						↓			
	⇩	↓			↓						↓						↓			
	Brighter	GS61	1	0	1	1	1	1	0	0	0	0	0	0	0	0	0	0	0	0
	⇩	GS62	0	1	1	1	1	1	0	0	0	0	0	0	0	0	0	0	0	0
	Red	GS63	1	1	1	1	1	1	0	0	0	0	0	0	0	0	0	0	0	0
Gray Scale of Green	Black	GS0	0	0	0	0	0	0	0	0	0	0	0	0	0	0	0	0	0	0
	⇧	GS1	0	0	0	0	0	0	1	0	0	0	0	0	0	0	0	0	0	0
	Darker	GS2	0	0	0	0	0	0	0	1	0	0	0	0	0	0	0	0	0	0
	⇧	↓			↓						↓						↓			
	⇩	↓			↓						↓						↓			
	Brighter	GS61	0	0	0	0	0	0	1	0	1	1	1	1	0	0	0	0	0	0
	⇩	GS62	0	0	0	0	0	0	0	1	1	1	1	1	0	0	0	0	0	0
	Green	GS63	0	0	0	0	0	0	1	1	1	1	1	1	0	0	0	0	0	0
Gray Scale of Blue	Black	GS0	0	0	0	0	0	0	0	0	0	0	0	0	0	0	0	0	0	0
	⇧	GS1	0	0	0	0	0	0	0	0	0	0	0	0	1	0	0	0	0	0
	Darker	GS2	0	0	0	0	0	0	0	0	0	0	0	0	0	1	0	0	0	0
	⇧	↓			↓						↓						↓			
	⇩	↓			↓						↓						↓			
	Brighter	GS61	0	0	0	0	0	0	0	0	0	0	0	0	1	0	1	1	1	1
	⇩	GS62	0	0	0	0	0	0	0	0	0	0	0	0	0	1	1	1	1	1
	Blue	GS63	0	0	0	0	0	0	0	0	0	0	0	0	1	1	1	1	1	1

0 :Low level voltage, 1 : High level voltage

Each basic color can be displayed in 64 gray scales from 6 bit data signals. According to the combination of total 18 bit data signals, the 262,144-color display can be achieved on the screen.

9. Optical Characteristics

Ta=25°C, Vcc=+5.0V

Parameter		Symbol	Condition	Min.	Typ.	Max.	Unit	Remark
Viewing angle range	Horizontal	θ21, θ22	CR>10	35	—	—	Deg.	[Note1,4]
	Vertical	θ11		30	—	—	Deg.	
		θ12		10	—	—	Deg.	
Contrast ratio		CR	θ=0°	100	—	—		[Note2,4]
Response time	Rise	τr		—	30	—	ms	[Note3,4]
	Decay	τd		—	50	—	ms	
Transmissivity		Tr		5.6	6.8	—	%	[Note4,5]
Shift of Chromaticity (white)		Δx		-0.035	-0.005	+0.025		[Note5,6]
		Δy		-0.010	+0.010	+0.050		

[Backlight for measurement]

Luminance: more than 3,500cd/m² ($\lambda_1 \geqq$ 400nm)

※The measurement shall be executed 30 minutes after lighting at rating.

The optical characteristics shall be measured in a dark room or equivalent state with the method shown in Fig.3 below.

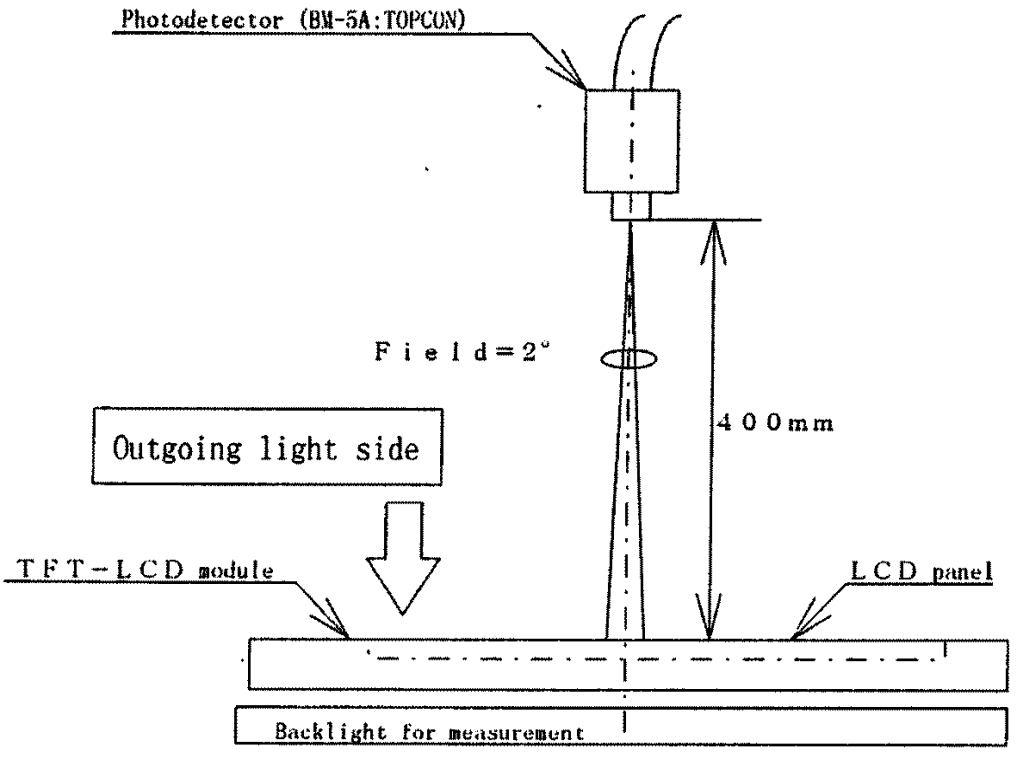

Fig. 3 Optical characteristics measurement

【Note1】 Definitions of viewing angle range:

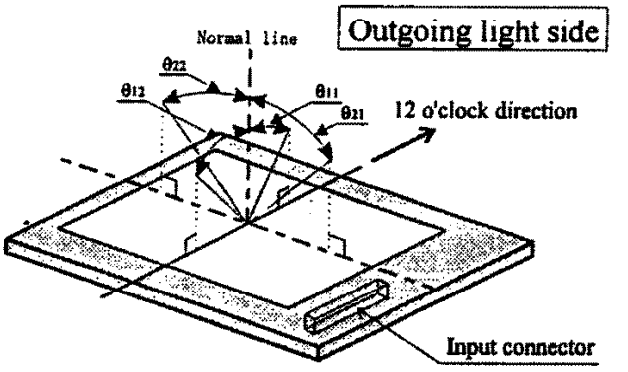

【Note2】 Definition of contrast ratio:

The contrast ratio is defined as the following.

$$\text{Contrast Ratio (CR)} = \frac{\text{Luminance (brightness) with all pixels white}}{\text{Luminance (brightness) with all pixels black}}$$

【Note3】 Definition of response time:

The response time is defined as the following figure and shall be measured by switching the input signal for "black" and "white".

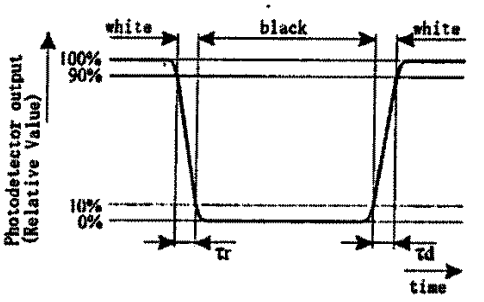

【Note4】 This shall be measured at center of the screen.

【Note5】 Definition of transmissivity:

Transmissivity is defined as follows.

$$Tr = \frac{\text{Luminance of transmitted light}}{\text{Luminance of incident light}} \times 100 \ (\%)$$

(Power source is not applied)

【Note6】 Chromaticity shift is the difference of the chromaticity of the light source and that of the outgoing light through the module.

The values are measured with standard illuminant : C(x=0.310,y=0.316)

10. Display Quality

The display quality of the color TFT-LCD module shall be in compliance with the Incoming Inspection Standard.

11. Handling Precautions

11-1) When insert or pull off the connector for the module, please turn off the power supply on the system side.

11-2) Precautions in mounting

A) When installing the module, be sure to fix the module on the same plane, not to warp or twist the module.

B) Since the polarizer is made of soft material, please take care not to scratch the surface.

C) On shipping, laminating film is attached on the panel surface to protect from scratches or dirts. It is recommended to peel off the laminated film just before the use with strict attention to electrostatic charges.

11-3) Precautions when peeling off the laminated film:

A) Working environment

When the laminated film is peeled off, there may be cases that some particles like dust are stuck on the panel by electrostatic charges or the TFT panel is damaged by electrostatic discharge, so the following working environment is recommended.

(a) Anti-electrostatic treatment more than 1MΩ on the floor.

(b) Work in the clean room.

(c) Humidity: 50% to 70%, Temperature: 15°C to 27°C

(d) Worker needs to wear the anti-electrostatic shoes, anti-electrostatic workwear, anti-electrostatic gloves and earth band.

B) How to work

(a) Sufficient ionized air blow is needed to avoid electrostatic charge caused by peeling the laminated film. Please keep the distance between the module and the heated ionized air blower within 20cm.(Fig.①)

(b) Attach an adhesive tape on the laminated film at the corner near the blower to make peeling easier. (Fig.②)

(c) Pull the adhesive tape to your side with the film. Please peel it off slowly and carefully using more than 5 seconds.

(d) The module after peeling the laminated film must be moved to next work immediately without getting dust.

(e) The way to remove `dust` from the surface of the polarizer

- Blow it off by nitrogen blow that is taken measures against electrostatic charges. Ionized air gun is recommended.
- When the polarizer is stained, wipe it gently using a soft cloth like a lens wiper breathing on it.

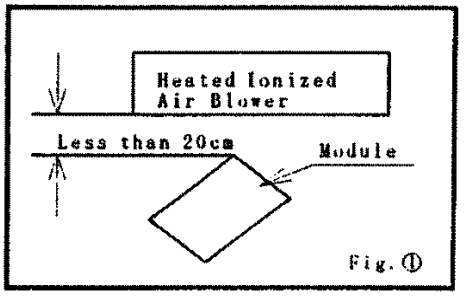

Fig. ①

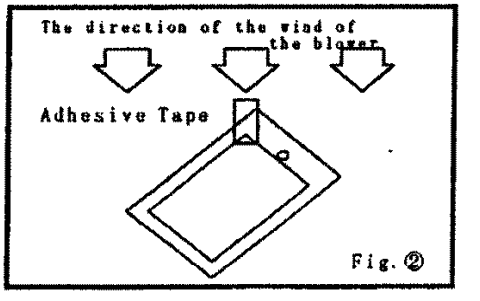

Fig. ②

11-3) Others

A) Wipe off water drop immediately. Long contact with water may cause discoloration or spots.

B) When the panel surface is soiled, wipe it with absorbent cotton or other soft cloth.

C) Since the panel is made of glass, it may break or crack if dropped or bumped on hard surface. Handle with care.

D) Since CMOS LSI is used in this module, take care of static electricity and ground your body when handling.

E) Observe all other precautionary requirements in handling components.

12. Packing form (TBD)

1) Piling number of cartons : MAX 7

2) Package quantity in one carton : 10 pcs

3) Carton size : 460 (W)× 300 (H)× 380 (D)mm

4) Total mass of one carton filled with full modules : 6150 g

Packing form is shown in Fig.4

13. Reliability test items

No.	Test item	Conditions
1	High temperature storage test	Ta=60°C 240h
2	Low temperature storage test	Ta=-25°C 240h
3	High temperature & high humidity operation test	Ta=40°C ; 95%RH 240h (No condensation)
4	High temperature operation test	Ta=50°C 240h (The panel temp. must be less than 60°C)
5	Low temperature operation test	Ta=0°C 240h
6	Vibration test (non- operating)	Frequency : 10~57Hz/Vibration width (one side):0.075mm : 58~500Hz/Gravity:9.8m/s^2 Sweep time : 11 minutes Test period : 3 hours (1 hour for each direction of X,Y,Z)
7	Shock test (non- operating)	Max. gravity : 490m/s^2 Pulse width : 11ms, half sine wave Direction : ±X,±Y,±Z once for each direction.

【Result Evaluation Criteria】

Under the display quality test conditions with normal operation state, these shall be no change which may affect practical display function.

14. Others

1) Lot No. Label: (TBD)

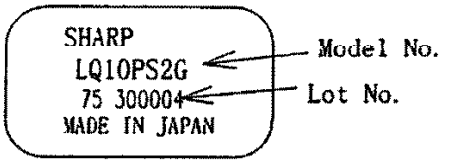

2) Adjusting volume have been set optimally before shipment, so do not change any adjusted value. If adjusted value is changed, the specification may not be satisfied.

3) Disassembling the module can cause permanent damage and should be strictly avoided.

4) Please be careful that image retention may occur when a fixed pattern is displayed for a long time.

5) If any problem occurs in relation to the description of this specification, it shall be resolved through discussion with spirit of cooperation.

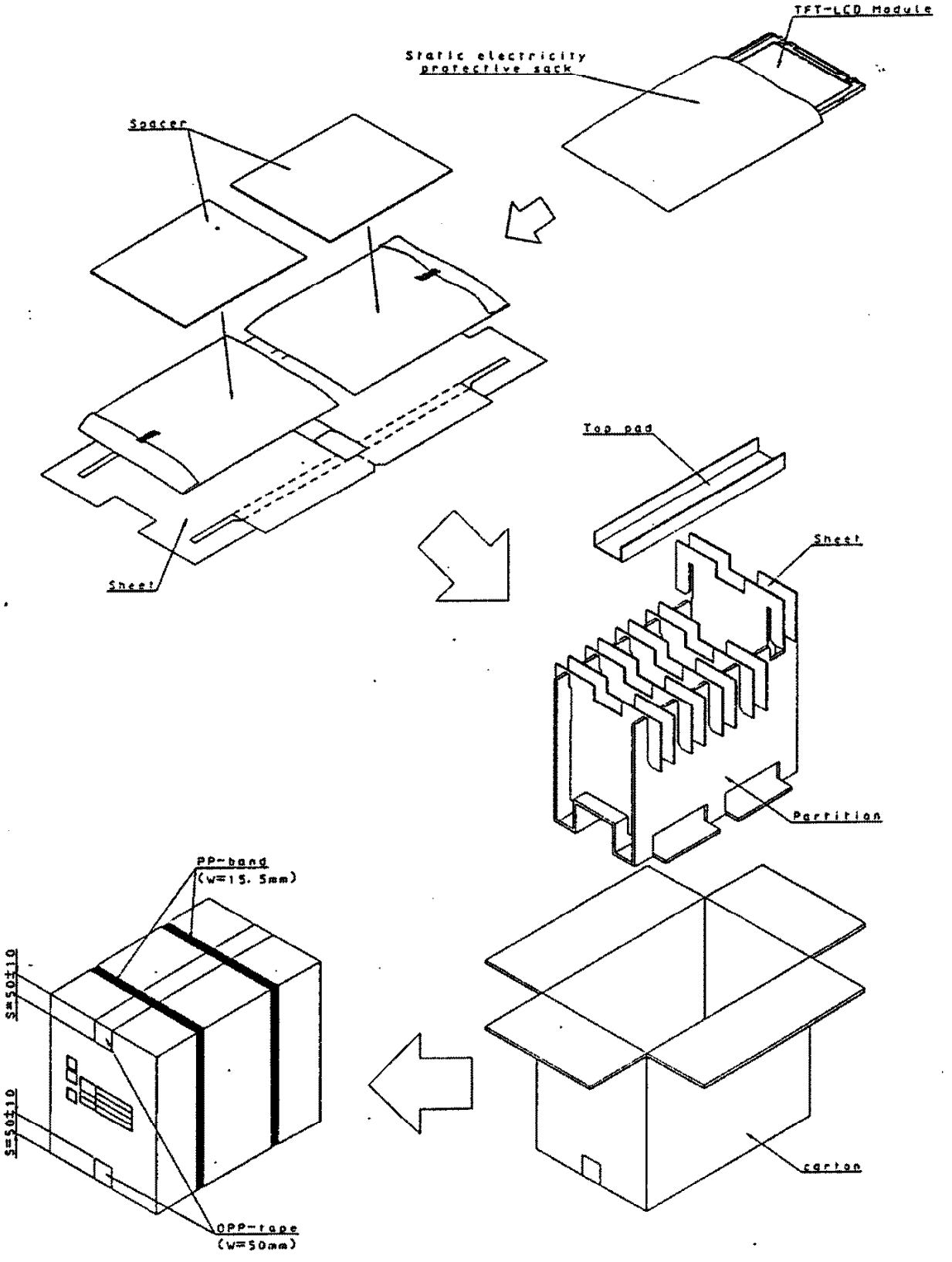

Fig.4 Packing form

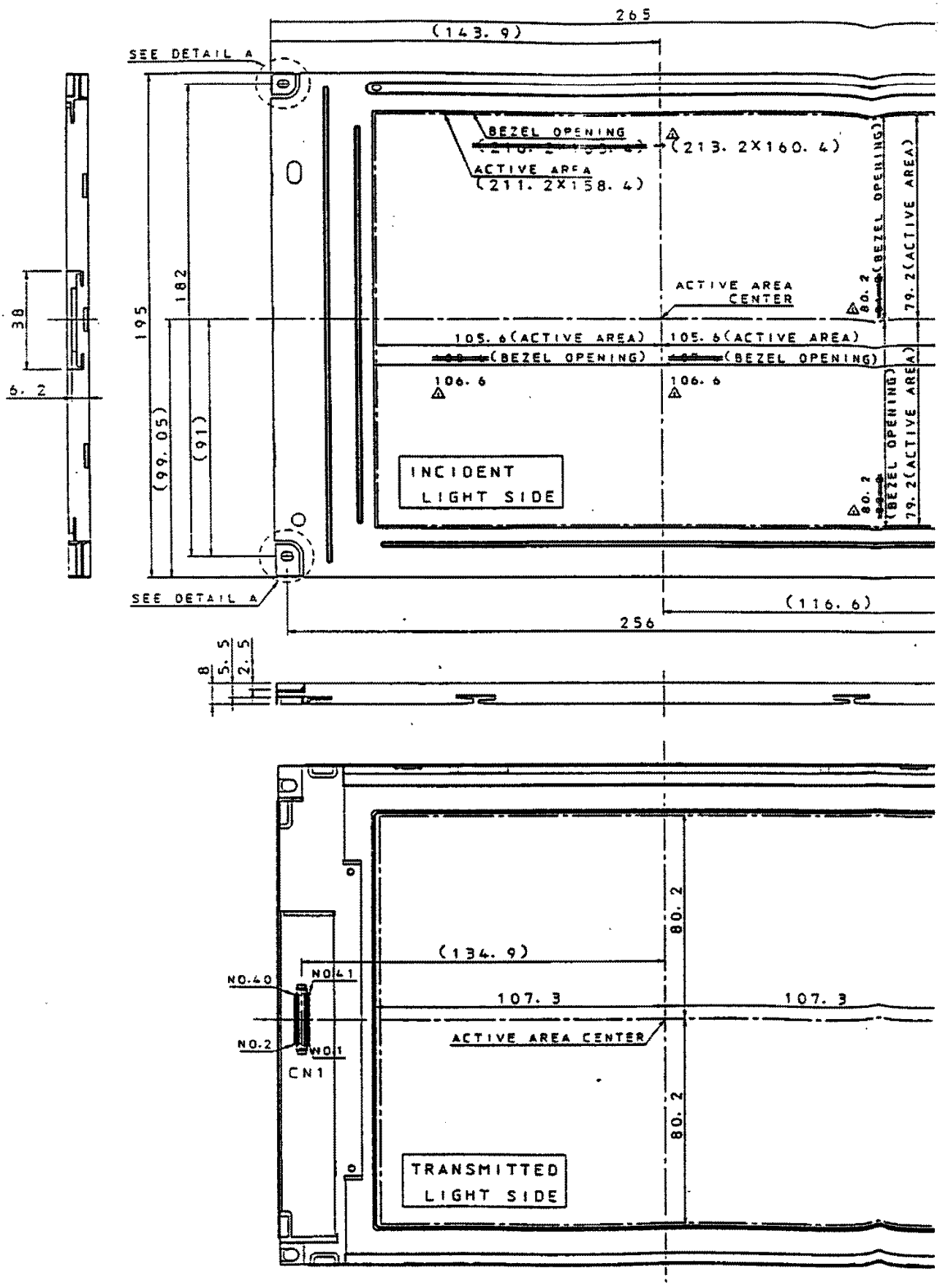

FIG1. LQ10PS2G OUTLINE DEM

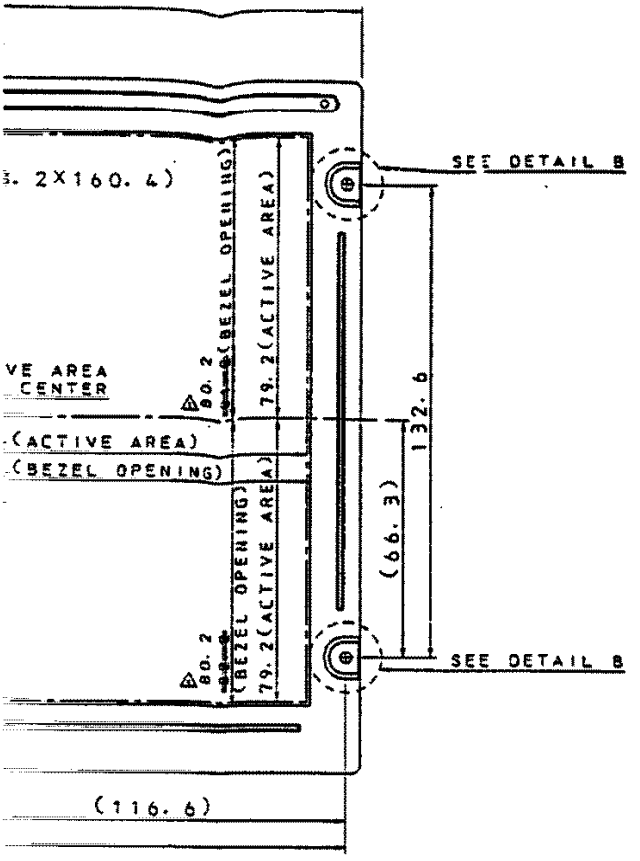

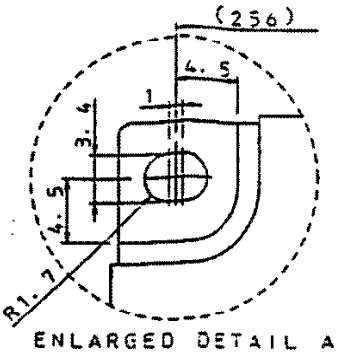

ENLARGED DETAIL A

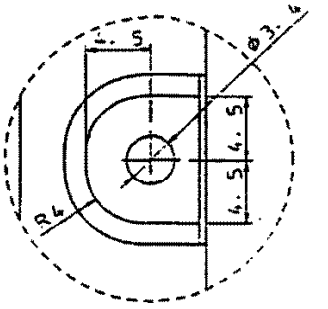

ENLARGED DETAIL B

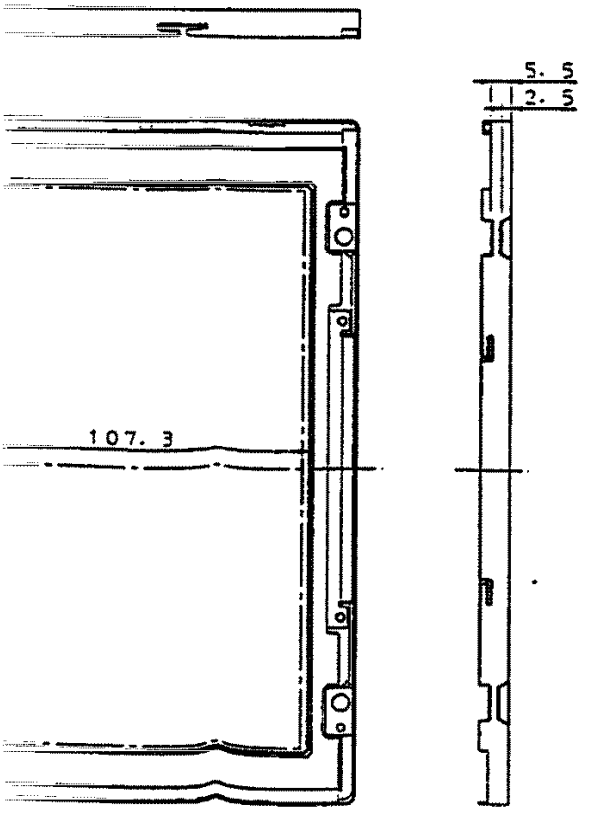

BEZEL/DISPLAY POSITION

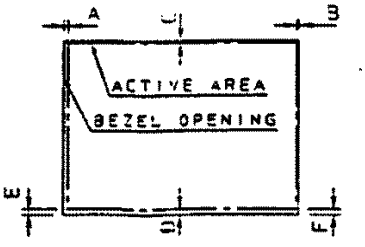

①TOLERANCE X-DIRECTION A: 1. 0±0. 8
②TOLERANCE X-DIRECTION B: 1. 0±0. 8
③TOLERANCE Y-DIRECTION C: 1. 0±0. 8
④TOLERANCE Y-DIRECTION D: 1. 0±0. 8
⑤OBLIQUITY OF DISPLAY AREA |E−F|<0. 8

NOTES
※UNSPECIFIED TOLERANCE TO BE ±0. 5
△Changed BEZEL opening area. (Apr. 23. 96)

:G OUTLINE DEMENSIONS

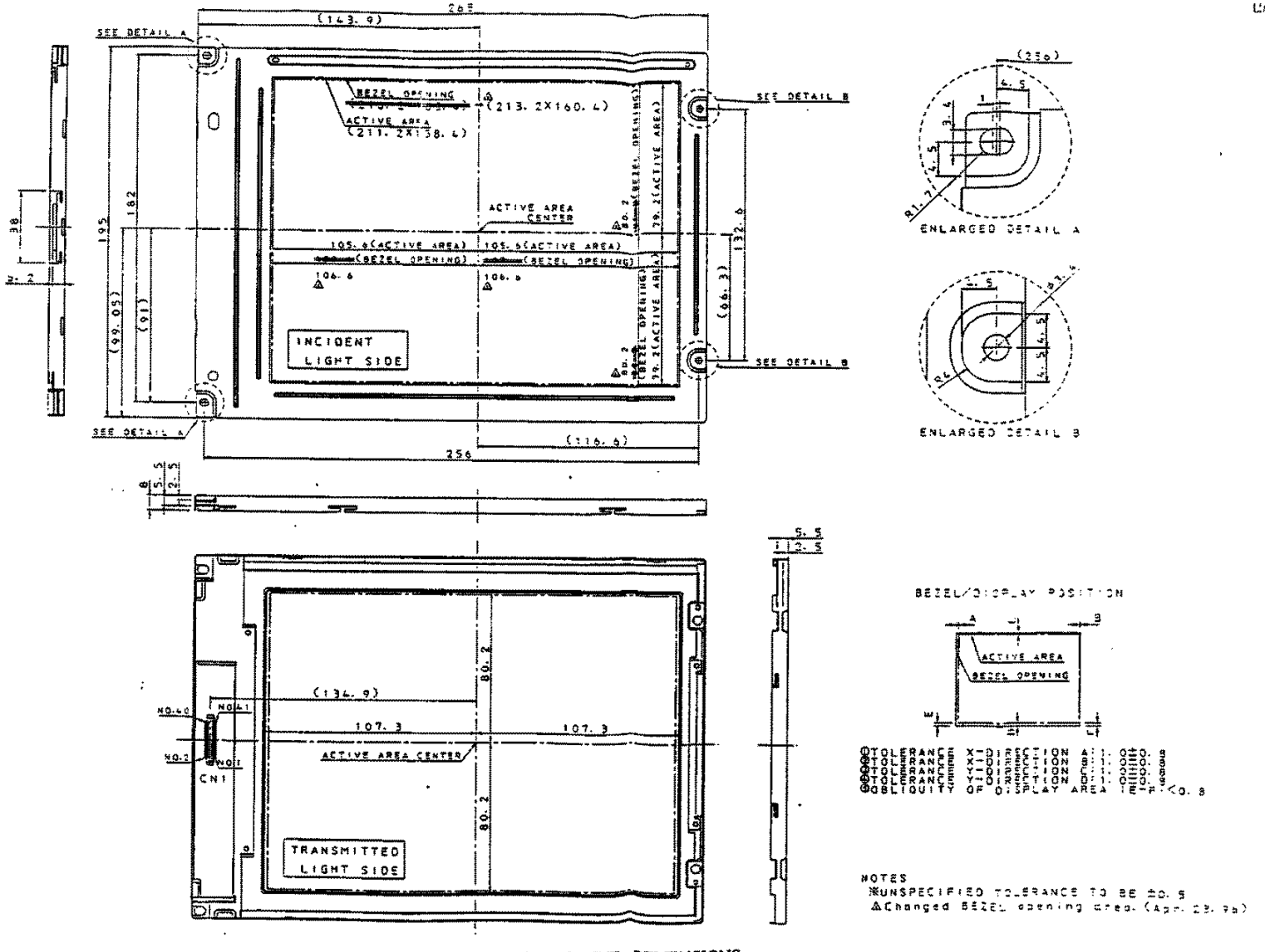

FIG1. LQ10PS2G OUTLINE DEMENSIONS